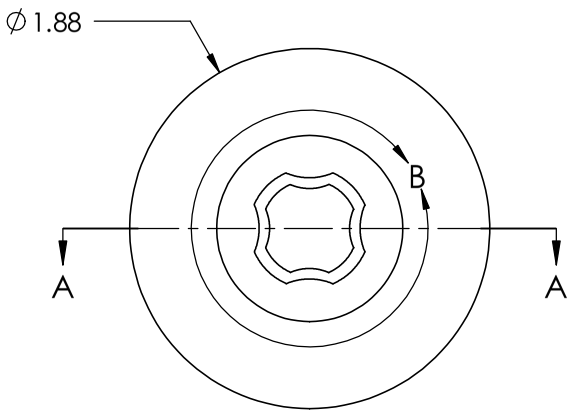

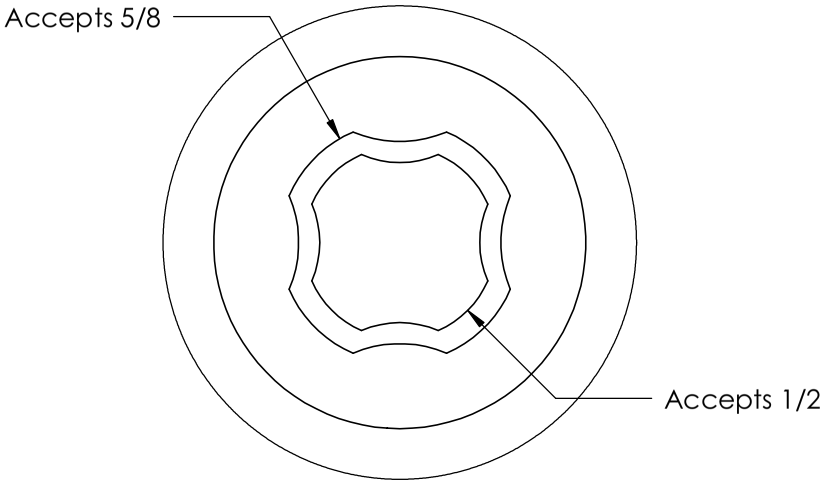

DETAIL B
SCALE 2 : 1

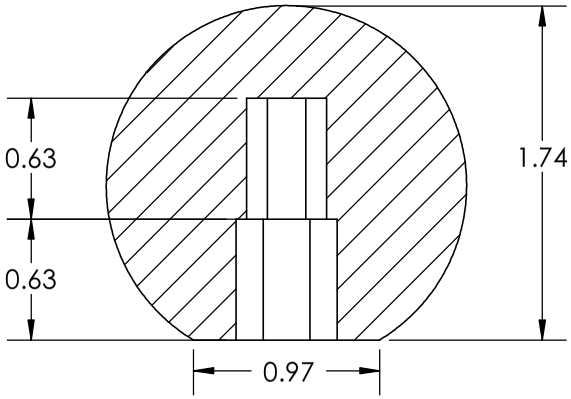

SECTION A-A

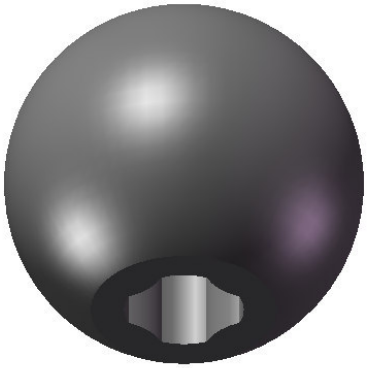

REV	BY	DATE	COMMENT
0	DHP	05/31/07	RELEASE DATE

PROPRIETARY AND CONFIDENTIAL

THE INFORMATION CONTAINED IN THIS DRAWING IS THE SOLE PROPERTY OF INNOVATIVE COMPONENTS. ANY REPRODUCTION IN PART OR AS A WHOLE WITHOUT THE WRITTEN PERMISSION OF INNOVATIVE COMPONENTS IS PROHIBITED.

DIMENSIONS ARE IN INCHES
TOLERANCES
FRACTIONAL ±
TWO PLACE DECIMAL ± 0.03
THREE PLACE DECIMAL ± 0.010
UNLESS OTHERWISE NOTED

MATERIAL
Polypropylene, black

INSERT

FINISH

DRAWN	DHP
APPROVED	MXO
DATE	05/31/07

COMMENTS
Accepts either fine or coarse threads

MIN. TORQUE N/A in.-lbs.

INNOVATIVE COMPONENTS

PART NAME
1.88" Ball Knob, Universal in 1/2 & 5/8 Thread types

PART NUMBER
KN8X-1X-B7-----

DRAWING NUMBER
B7

SCALE 1:1

SHEET 1 OF 1