UNCONTROLLED DOCUMENT

NOTES:
DRIVE SIZE - #2

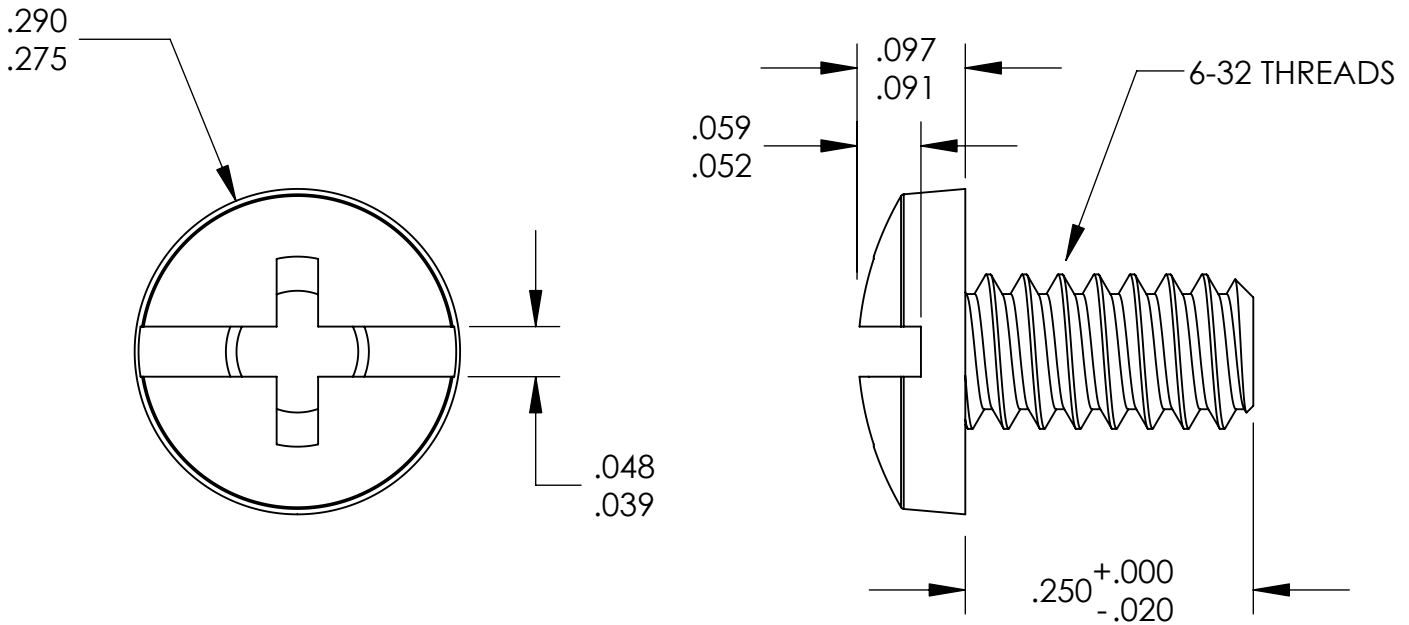

TOLERANCES UNLESS NOTED

±.005 ON DIMENSIONS THRU .625
±.008 ON DIMENSIONS .626 THRU 1.000
±.010 ON DIMENSIONS 1.001 THRU 1.500
±.015 ON DIMENSIONS LARGER THAN 1.500
±.015 ON FRACTIONAL DIMENSIONS

WE RESERVE THE RIGHT TO DISCONTINUE ITEMS, CHANGE SPECIFICATIONS OR DESIGN AT ANY TIME WITHOUT NOTICE AND WITHOUT INCURRING ANY OBLIGATIONS

PROPERTY OF

MICRO PLASTICS INC.

CATALOG DRAWING
COMBO DRIVE BINDER MACHINE SCREW
MICRO P/N 010632CD025
DWG. # 010632CD025
FILE SERVER\ENG\WEB

MATERIAL: 6/6 NYLON

DATE	SCALE	
	6:1	TA