AVAILABLE BY SPECIAL ORDER- NAFTA REGION ONLY

MATERIAL: NYLON 6/6 UL 94 V-2 (RMS-01) PART NO.	DIM. "A"±.015 [0.4]
LCBSA-3-3-01	3/16 [4.8]
LCBSA-3-4-01	1/4 [6.4]
LCBSA-3-5-01	5/16 [7.9]
LCBSA-3-6-01	3/8 [9.5]
LCBSA-3-7-01	7/16 [11.1]
LCBSA-3-8-01	1/2 [12.7]
LCBSA-3-10-01	5/8 [15.9]
LCBSA-3-12-01	3/4 [19.1]
LCBSA-3-14-01	7/8 [22.2]
LCBSA-3-16-01	1 [25.4]
LCBSA-3-18-01	1-1/8 [28.6]
LCBSA-3-20-01	1-1/4 [31.7]
LCBSA-3-22-01	1-3/8 [34.9]

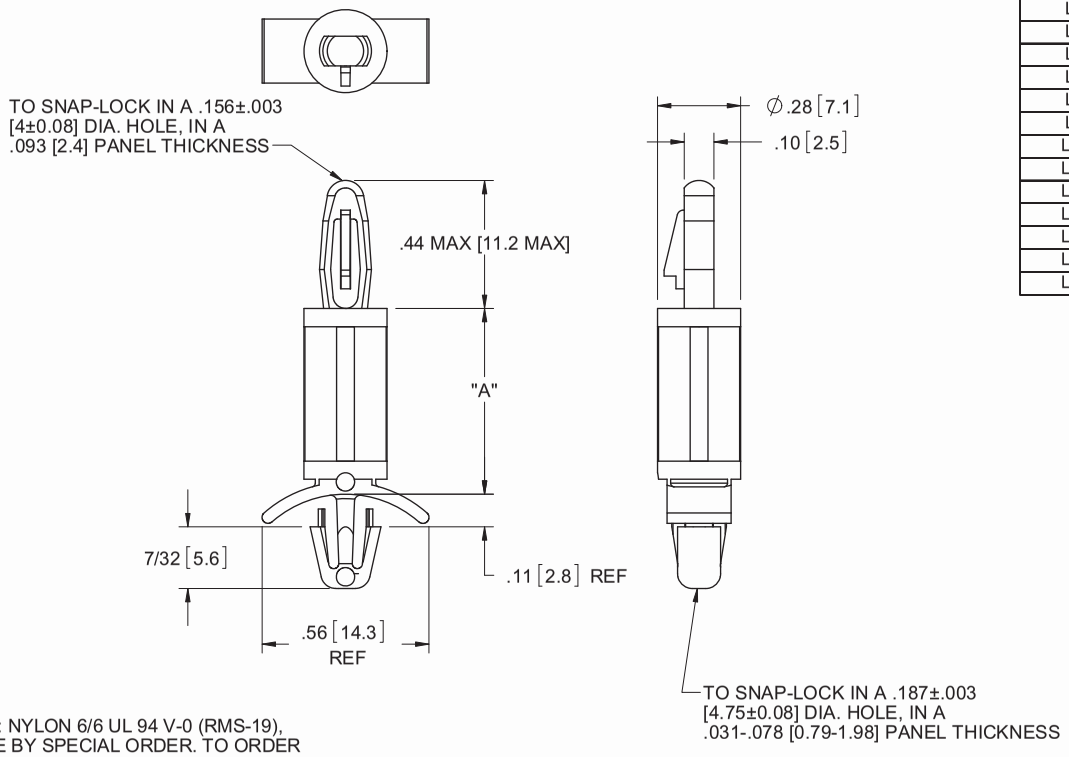

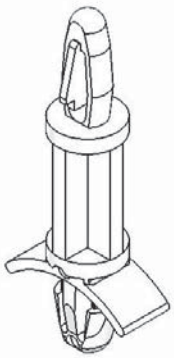

NOTES:
1. MATERIAL: NYLON 6/6 UL 94 V-0 (RMS-19), AVAILABLE BY SPECIAL ORDER. TO ORDER REPLACE "-01" WITH "-19".
2. COLOR: NATURAL.
3. ALTERNATE UNITS FOR REFERENCE ONLY.

REV.	DESCRIPTION	ENGR.	DATE
E	DIMENSION FROM .43 TO .44 MAX, ECN#1384	DZ	10/24/2013
D	CHANGED PART NUMBER, CO 200605	SK	12/02/2010
C	REDRAWN, SEE ECN #1208 FOR CHANGES	SK	11/29/2006
B	SEE ECN #862 FOR CHANGES	SM	10/04/2004
A	UPDATED PRINT AND CHANGED FILE NUMBER	SM	09/27/2001

TITLE: LOCKING CKT BD. SUPPORT, SPECIAL

UNITS: IN [mm]

CREATED USING SOLIDWORKS

TOLERANCES UNLESS NOTED
.XX=±.010
.XXX=±.005
FRAC.=±1/64
ANG.=±1°

FILE #: LCBSA-3 | DWN: SK | APP: RT | FINAL

SHEET: 1 OF 1 | SHEET SIZE: A | DT: 08/24/06 | CHKD: SJ

RE: RICHCO, INC.

RICHCO, INC.
ENG@RICHCO-INC.COM
(773) 539-4060

PART # SEE TABLE

PRINT TYPE CA