MATERIAL: NYLON 6/6 UL94 V-2 (RMS-01), COLOR: NATURAL PART NO.	MATERIAL: NYLON 6/6 UL94 V-0 (RMS-19), COLOR: NATURAL PART NO.	DIM. "A"
SMLCBS-5-01	SMLCBS-5-19	7.94 [.3125]
SMLCBS-6-01	SMLCBS-6-19	9.53 [.375]
SMLCBS-7-01	SMLCBS-7-19	11.11 [.4375]
SMLCBS-8-01	SMLCBS-8-19	12.7 [.500]

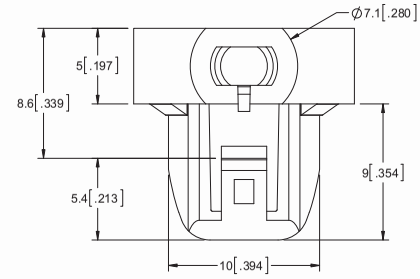

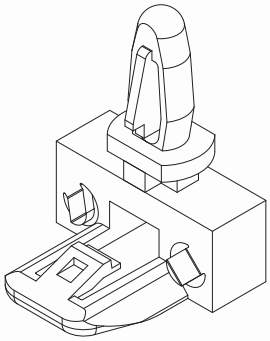

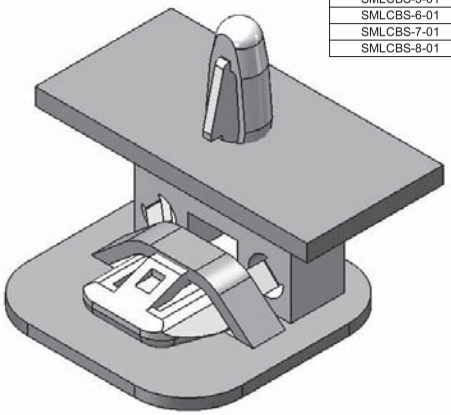

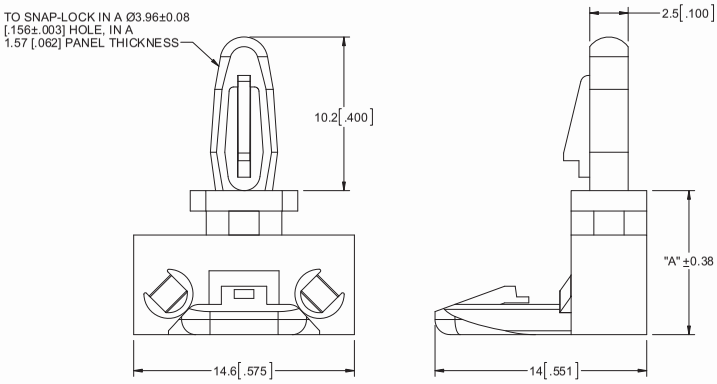

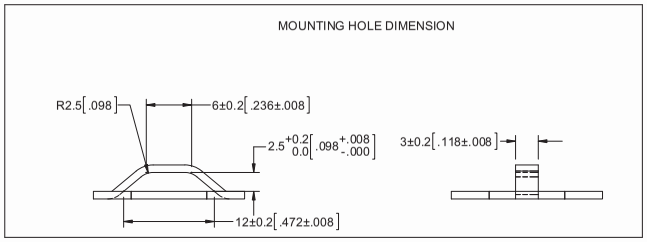

REV.	DESCRIPTION	ENGR.	DATE
A	RELEASED FOR PRODUCTION	SK	12/06/2011

TITLE: SIDE MOUNT LCBS

UNITS= mm [IN]

CREATED USING SOLIDWORKS

TOLERANCES UNLESS NOTED
X<10=±0.1
10<X<30=±0.3
X>30=±0.5
ANG.=±1°

FILE #: SMLCBS | DWN: DZ | APP: DZ | FINAL

SHEET: 1 OF 1 | SHEET SIZE: B | DT: 12/05/2011 | CHKD: SK

RE: RICHCO, INC.

RICHCO, INC.
WWW.RICHCO-INC.COM

PART # SEE TABLE

PRINT TYPE CA