ESSENTRA COMPONENTS



New from the experts

OUR RANGE OF NEW PRECISION AND AUTOMATION PRODUCTS

ESSENTRA COMPONENTS

SUPPORT WITH WHATEVER YOU NEED, WHEN YOU NEED IT

2,500 experts around the world, here to help

We combine global manufacturing expertise with hassle-free service to deliver solutions specifically for your needs.

Trust in 65+ years of experience and excellence to meet your most demanding needs. We help customers meet everyday challenges with expertise that spans from manufacturing to designing custom solutions, for both traditional and emerging industries.



FORMATION OF **FILTRONA CORPORATION** 1940s — FILTRONA

1950 FORMATION OF **MOSS PLASTIC PARTS** — Moss

ACQUISITION OF **ALLIANCE** 1987 — ALLIANCE

2004 ACQUISITION OF **SKIFFY** — Skiffy

ACQUISITION OF **REID** 2011 — Reid Supply Company

2011 ACQUISITION OF **RICHCO** — Richco

ACQUISITION OF **ULINCO** 2013 — ulinco

2013 ACQUISITION OF **MESAN** — mesan

ACQUISITION OF **KELVINDALE** 2014 — Kelvindale Products Pty Ltd.

2014 ACQUISITION OF **ABRIC** — ABRIC

ACQUISITION OF **SPECIALTY PLASTICS** 2015 — sp specialtyplastics

2017 ACQUISITION OF **MICRO PLASTIC** — micro plastics, inc.

ACQUISITION OF **HERTILIA** 2018 — Hertila

2019 ACQUISITION OF **INNOVATIVE COMPONENTS** — INNOVATIVE COMPONENTS, INC.

ACQUISITION OF **HENGZHU** 2021 — HENGZHU

2022 ACQUISITION OF **WIXROYD** — Wixroyd

ACQUISITION OF **BMP TAPPI** 2023 — BMP TAPPI

Fast Find Index

MECHANICAL COMPONENTS


Cap Head Seal Screws


Button Head Seal Screws


Integral Seal Bolts


Integral Seal Domed Nuts

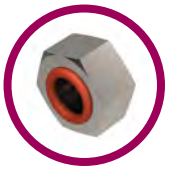
Integral Seal Hex Nuts


Pan Head Seal Screws


Seal Washers


Cap Screws - Low Head


Captive Screw Retainer Flange


Captive Screws - Button Head


Captive Screws - Cap Head


Captive Screws - Cheese Head


Captive Screws - Countersunk


Captive Screws - Pan Head


Captive Thumb Screws - Long Head


Captive Thumb Screws - Low Head


Captive Thumb Screws - Low Head with Slot


Threaded Captive Washers


Shoulder Screws - Ultra Low Head


Shoulder Screws - Cap Head


Shoulder Screws - Hex Socket Head


Shoulder Screws - Pan Head


Shoulder Screws - Slot Head


Shoulder Bolts - Hex Head


Precision Adjusters


Precision Adjusters - Tilt Head


Spacers for Precision Levelling Adjusters


Spacers for One Touch Fasteners


Ball Shim Levellers


Vented Countersunk Machine Screws


Vented Screws - Socket Button Head


Vented Screws - Cap Head


Vented Screws - Hex Head


Vented Shoulder Screws - Cap Head


Stainless Vented Washers


Threaded Inserts - Inch


Threaded Inserts - Metric


Anti-vibration Cylinders

Fast Find Index

LINEAR MOTION COMPONENTS


Linear Guide Rails

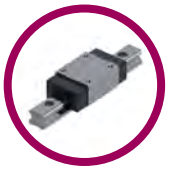
Unflanged Carriages - Low


Unflanged Carriages - Standard


Unflanged Stainless Carriages

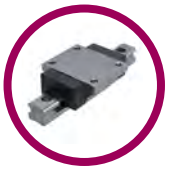
Flanged Carriages - Standard


Rail Clamps


Miniature Linear Rails


Miniature Rail Carriages


Manual Clamps for Miniature Rail


Aluminium Linear Guide Rails

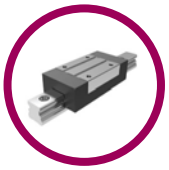
Unflanged Aluminium Carriages


Flanged Aluminium Carriages


Crossed Roller Rail Sets


Lead Screws


Cylindrical Bronze Nuts


Flanged Bronze Nuts


Cylindrical Steel Nuts

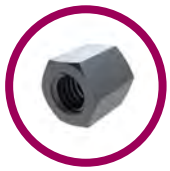
Hexagon Steel Nuts


Square Nuts


Ball Screws


Flanged Ball Nuts


Hardened Steel Shafts


Hardened Hollow Shafts


Hardened Stainless Shafts


Stainless AISI 303/316 Shafts


Aluminium Shafts


Closed Linear Ball Bushings


Compact Linear Ball Bushings


Adjustable Linear Ball Bushings


Flanged Linear Ball Bushings


Long Centre Flange Linear Ball Bushings


Superball Closed Linear Ball Bushings


Superball Open Linear Ball Bushings


Linear Carriages - Closed


Shaft Support Rails


Open Linear Ball Bushing Carriages


Flanged Linear Carriages


Open Linear Ball Bushings


Manual Shaft Clamps

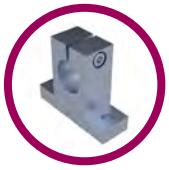
Shaft End Supports

Fast Find Index

ROTARY MOTION COMPONENTS


Ball & Socket Joints - with Flats on Housing


Ball & Socket Joints - with Sealing Cap


Ball & Socket Joints


Clevis Joints with Pin


Clevis Joints


Clevis Joints with Retention Clips


Male Clevis Joints


Mating Pieces for Clevis Joints


Clevis Pins with Hole


Clevis Pins


Clevis Retention Clips


Cotter Pins


Safety Fasteners (KLM)


Safety Fasteners (SLM)


Stainless Circlips


Plastic Circlips


Heavy Duty Rod Ends - Female


Heavy Duty Rod Ends - Male


Single Universal Joints


Single Universal Joint - Unbored Solid Ends


Double Universal Joints


Double Universal Joints - Unbored Solid Ends


Bellows


Telescopic Universal Joints

Fast Find Index

WORKHOLDING


Machinable Fixture Clamps

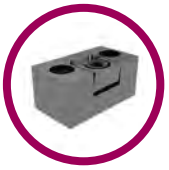
Modular Pitbull Clamps


Pitbull Clamps

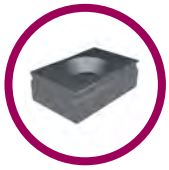
Talongrip Clamps


Talongrip Serrated Grips


Cam Clamps


Clamp Replacement Screws


Clamping Plates


Compact Wedge Clamps


Dyna-Force Clamps


Eccentric Fixture Clamps


Eccentric Knife Edge Clamps



Eccentric Pull Down Clamps



Expanding Loc-Down Bolts



ID Xpansion Clamps - Machinable



XYZ Xpansion Pins - Press-Fit



XYZ Xpansion Pins - Threaded



Uniforce Clamps



Uniforce Clamps - Long Length



Uniforce Clamps - Machinable



Variable Hexagon Clamps



Versagrip Grippers & Clamps



Vice Jaw Sets



Riser Plates



Scale Plates



Sliding Clamps - for Slotted Hole



Sliding Clamps - for Solid Round Bar

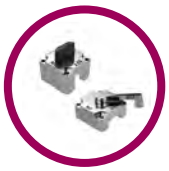

Sliding Clamps - for Solid Sliding Bar



Spiral Cam Clamps



Spiral Cam Clamps - Actuating Handle



One-Touch Fastener - Ball Clamping



One-Touch Fastener - Ball Locking



One-Touch Fastener - Cam Locking - Retract



One-Touch Fastener - Cam Locking



One-Touch Fastener - Pull Clamping



Locating Bushes



Lock Nuts - Slip-On



Quick Tightening Knurled Knobs



Thrust Screws - Brass Pad



Thrust Screws - Plastic Pad



Washers - Spherical Seat

Cap Head Seal Screws

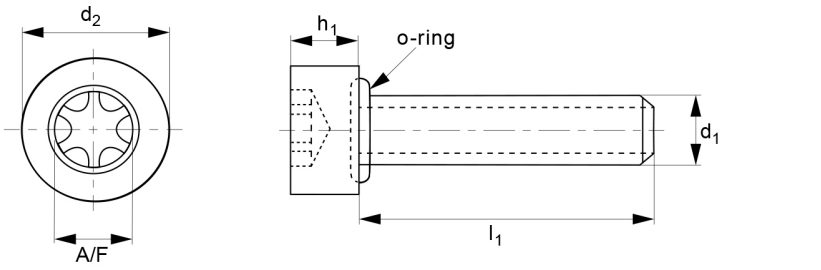

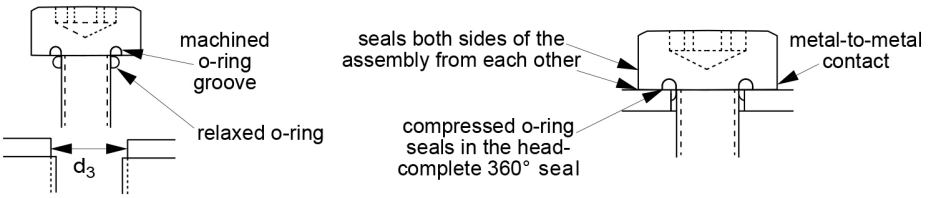



Features

- Designed with an o-ring to provide secure bi-directional protection against contaminates, such as gases and fluids, in various applications
- Prevents the entry of water, dust or other contaminants, ensuring a secure and reliable connection.
- Used in threaded and non-threaded holes, in applications such as cabinets, or used in the automotive and electric industries.

Specifications

Material: 303 Stainless Steel

This range of sealing screws has a cap head with a torx socket drive, incorporating an O-ring that is compressed-squeezed between the head, the socket drive and the mating surface to complete the seal. Manufactured from stainless steel, which provides good corrosion resistance and is slightly magnetic.

Seal screws are a type of fastener designed with an o-ring to provide secure bi-directional protection against contaminates such as gases and fluids in various applications, minimising the risk of damage to sensitive equipment. They prevent the entry of water, dust, or other contaminants, ensuring a secure, reliable connection.

Seal screws are used in threaded and non-threaded holes in applications such as cabinets or used in the automotive and electric industries.

Please note: Our seal screws are designed for use in applications where sealing properties are required. It could be confused with standard fasteners, these do not require sealing properties and with an O-ring you will not get a sealing property like you get with seal screws and may damage the ring.

Cap Head Seal Screws

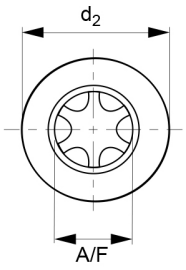

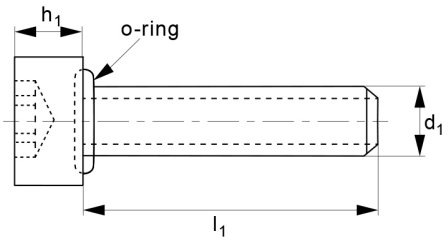

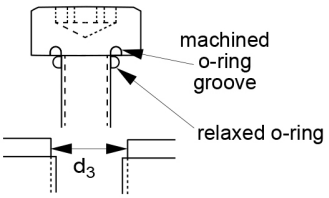

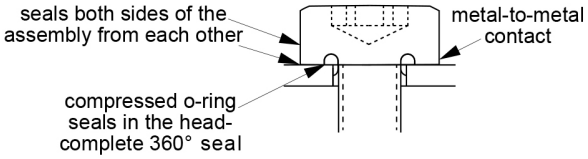



Part Number	Drive Torx	d1	l1	h1 max	d2 max	d3 ±0.05
20227753	TX 6	M2	4.0	2.0	3.8	2.35
20227760	TX 6	M2	8.0	2.0	3.8	2.35
20227777	TX 6	M2	10.0	2.0	3.8	2.35
20227784	TX 6	M2	12.0	2.0	3.8	2.35
20227791	TX 8	M2.5	6.0	2.5	4.5	2.75
20227807	TX 8	M2.5	8.0	2.5	4.5	2.75
20227081	TX 8	M2.5	10.0	2.5	4.5	2.75
20227814	TX 8	M2.5	12.0	2.5	4.5	2.75
20227821	TX 10	M3	6.0	3.0	5.5	3.6
20227838	TX 10	M3	8.0	3.0	5.5	3.6
20227845	TX 10	M3	10.0	3.0	5.5	3.6
20227852	TX 10	M3	12.0	3.0	5.5	3.6
20227869	TX 10	M3	20.0	3.0	5.5	3.6
20227876	TX 20	M4	6.0	4.0	7.0	4.5
20227883	TX 20	M4	8.0	4.0	7.0	4.5
20227890	TX 20	M4	10.0	4.0	7.0	4.5
20227906	TX 20	M4	12.0	4.0	7.0	4.5
20227913	TX 20	M4	16.0	4.0	7.0	4.5
20227920	TX 20	M4	20.0	4.0	7.0	4.5
20227937	TX 25	M5	8.0	5.0	8.5	5.6

Cap Head Seal Screws

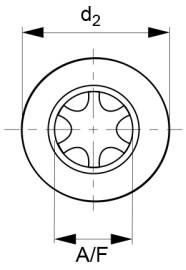

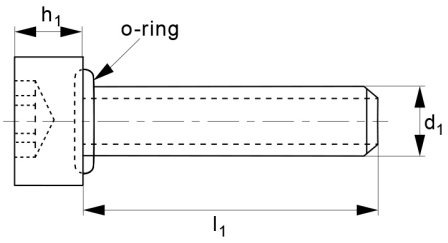

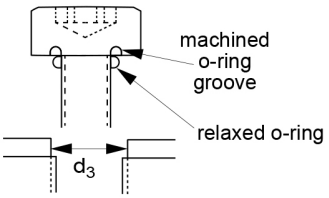

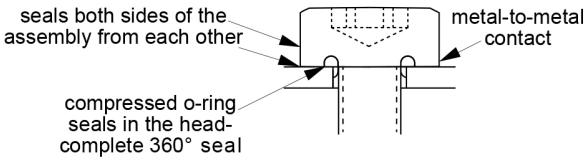



Part Number	Drive Torx	d1	l1	h1 max	d2 max	d3 ±0.05
20227944	TX 25	M5	10.0	5.0	8.5	5.6
20227951	TX 25	M5	12.0	5.0	8.5	5.6
20227968	TX 25	M5	16.0	5.0	8.5	5.6
20227975	TX 25	M5	20.0	5.0	8.5	5.6
20227982	TX 30	M6	12.0	6.0	10.0	6.8
20227999	TX 30	M6	16.0	6.0	10.0	6.8
20228002	TX 30	M6	20.0	6.0	10.0	6.8
20228019	TX 30	M6	25.0	6.0	10.0	6.8
20228026	TX 30	M6	30.0	6.0	10.0	6.8
20228033	TX 45	M8	12.0	8.0	13.0	8.5
20228040	TX 45	M8	16.0	8.0	13.0	8.5
20228057	TX 45	M8	20.0	8.0	13.0	8.5
20228064	TX 45	M8	25.0	8.0	13.0	8.5
20228071	TX 45	M8	30.0	8.0	13.0	8.5
20228088	TX 50	M10	16.0	10.0	16.0	10.6
20228095	TX 50	M10	20.0	10.0	16.0	10.6
20228101	TX 50	M10	25.0	10.0	16.0	10.6
20228118	TX 50	M10	30.0	10.0	16.0	10.6
20228125	TX 50	M10	40.0	10.0	16.0	10.6
20228132	TX 55	M12	20.0	12.0	18.0	12.85
20228149	TX 55	M12	25.0	12.0	18.0	12.85

Cap Head Seal Screws

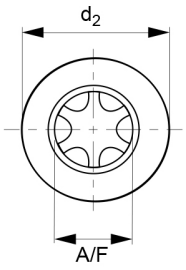

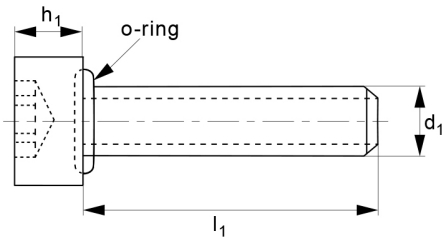

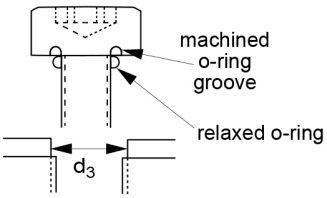

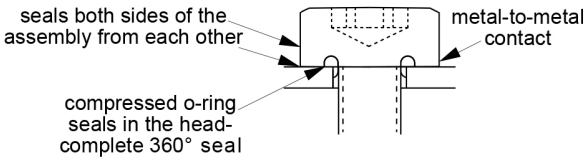



Part Number	Drive Torx	d1	l1	h1 max	d2 max	d3 ±0.05
20228156	TX 55	M12	30.0	12.0	18.0	12.85
20228163	TX 55	M12	40.0	12.0	18.0	12.85
20228170	TX 55	M12	50.0	12.0	18.0	12.85

Button Head Seal Screws

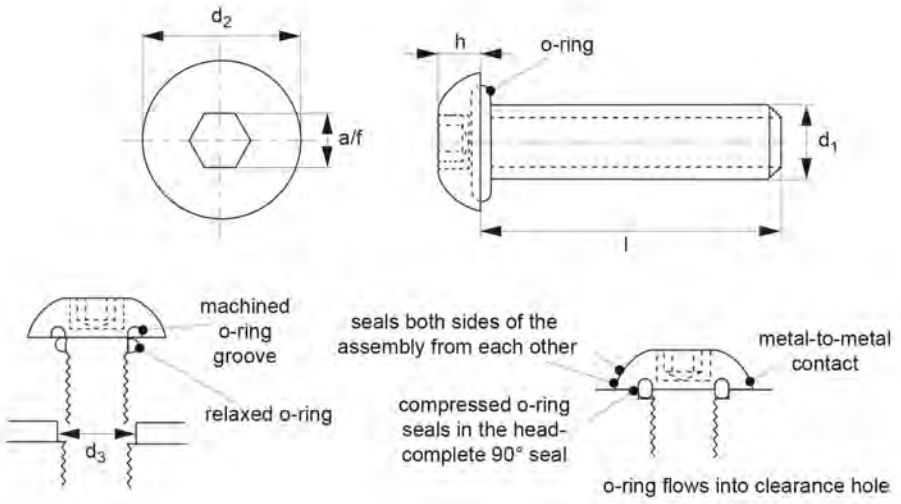



Features

- Designed with an o-ring to provide secure bi-directional protection against contaminates.
- Prevent the entry of water, dust, or other contaminants, ensuring a secure, reliable connection.
- Used in threaded and non-threaded holes in applications such as cabinets or used in the automotive and electric industries.

Specifications

Material: 316 Stainless Steel, 303 Stainless Steel

This range of Seal Screws features a button head with a hexagonal drive. Hexagonal drives are ideal for precision assembly and are used where less surface area is available. They are made from Stainless Steel that provides good resistance to corrosion and is slightly magnetic.

Seal screws are a type of fastener designed with an o-ring to provide secure bi-directional protection against contaminates such as gases and fluids in various applications, minimising the risk of damage to sensitive equipment. They prevent the entry of water, dust, or other contaminants, ensuring a secure, reliable connection.

Seal screws are used in threaded and non-threaded holes in applications such as cabinets or used in the automotive and electric industries. Please note: Our seal screws are designed for use in applications where sealing properties are required. It could be confused with standard fasteners, these do not require sealing properties and with an O-ring you will not get a sealing property like you get with seal screws and may damage the ring.

Button Head Seal Screws

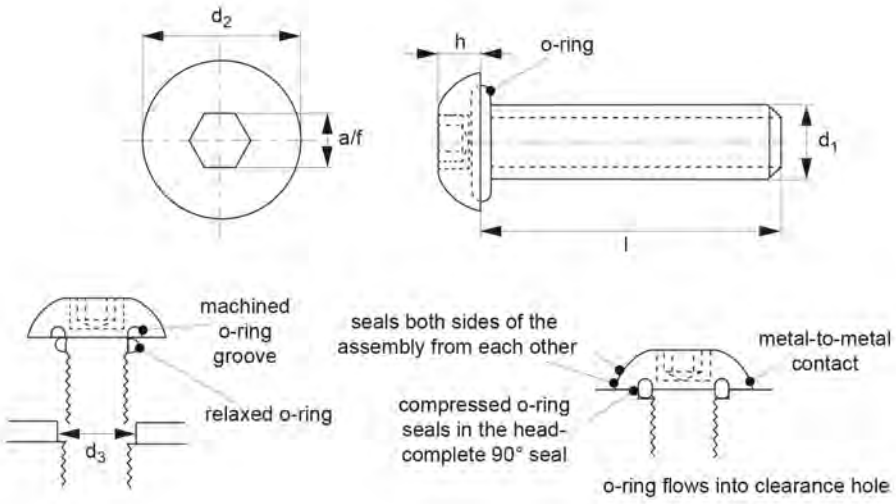



Part Number	d1	l1	h1 max	d2 max	A/F	d3 ±0.05	Material
20224400	M3	6.0	1.7	5.7	2.0	3.6	303 Stainless Steel
20225827	M3	6.0	1.7	5.7	2.0	3.6	316 Stainless Steel
20224417	M3	8.0	1.7	5.7	2.0	3.6	303 Stainless Steel
20225834	M3	8.0	1.7	5.7	2.0	3.6	316 Stainless Steel
20224424	M3	10.0	1.7	5.7	2.0	3.6	303 Stainless Steel
20225841	M3	10.0	1.7	5.7	2.0	3.6	316 Stainless Steel
20224431	M3	12.0	1.7	5.7	2.0	3.6	303 Stainless Steel
20225858	M3	12.0	1.7	5.7	2.0	3.6	316 Stainless Steel
20224448	M3	20.0	1.7	5.7	2.0	3.6	303 Stainless Steel
20225865	M3	20.0	1.7	5.7	2.0	3.6	316 Stainless Steel
20224455	M4	6.0	2.2	7.6	2.5	4.5	303 Stainless Steel
20225872	M4	6.0	2.2	7.6	2.5	4.5	316 Stainless Steel
20224462	M4	8.0	2.2	7.6	2.5	4.5	303 Stainless Steel
20225889	M4	8.0	2.2	7.6	2.5	4.5	316 Stainless Steel
20224479	M4	10.0	2.2	7.6	2.5	4.5	303 Stainless Steel
20225896	M4	10.0	2.2	7.6	2.5	4.5	316 Stainless Steel
20224486	M4	12.0	2.2	7.6	2.5	4.5	303 Stainless Steel
20225902	M4	12.0	2.2	7.6	2.5	4.5	316 Stainless Steel
20224493	M4	16.0	2.2	7.6	2.5	4.5	303 Stainless Steel
20225919	M4	16.0	2.2	7.6	2.5	4.5	316 Stainless Steel
20224509	M4	20.0	2.2	7.6	2.5	4.5	303 Stainless Steel

Button Head Seal Screws

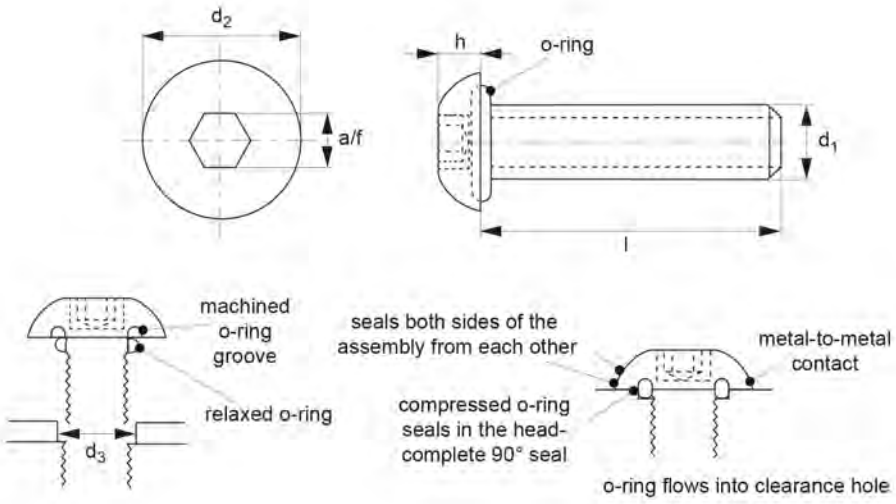



Part Number	d1	l1	h1 max	d2 max	A/F	d3 ±0.05	Material
20225926	M4	20.0	2.2	7.6	2.5	4.5	316 Stainless Steel
20224516	M5	8.0	2.8	9.5	3.0	5.6	303 Stainless Steel
20225933	M5	8.0	2.8	9.5	3.0	5.6	316 Stainless Steel
20224523	M5	10.0	2.8	9.5	3.0	5.6	303 Stainless Steel
20225940	M5	10.0	2.8	9.5	3.0	5.6	316 Stainless Steel
20229986	M5	10.0	2.8	9.5	3.0	5.6	303 Stainless Steel
20224530	M5	12.0	2.8	9.5	3.0	5.6	303 Stainless Steel
20225957	M5	12.0	2.8	9.5	3.0	5.6	316 Stainless Steel
20250133	M5	12.0	2.8	9.5	3.0	5.6	303 Stainless Steel
20224547	M5	16.0	2.8	9.5	3.0	5.6	303 Stainless Steel
20225964	M5	16.0	2.8	9.5	3.0	5.6	316 Stainless Steel
20228484	M5	16.0	2.8	9.5	3.0	5.6	303 Stainless Steel
20224554	M5	20.0	2.8	9.5	3.0	5.6	303 Stainless Steel
20225971	M5	20.0	2.8	9.5	3.0	5.6	316 Stainless Steel
20224561	M6	12.0	3.3	10.5	4.0	6.8	303 Stainless Steel
20225988	M6	12.0	3.3	10.5	4.0	6.8	316 Stainless Steel
20224578	M6	16.0	3.3	10.5	4.0	6.8	303 Stainless Steel
20225995	M6	16.0	3.3	10.5	4.0	6.8	316 Stainless Steel
20224585	M6	20.0	3.3	10.5	4.0	6.8	303 Stainless Steel
20226008	M6	20.0	3.3	10.5	4.0	6.8	316 Stainless Steel

Button Head Seal Screws

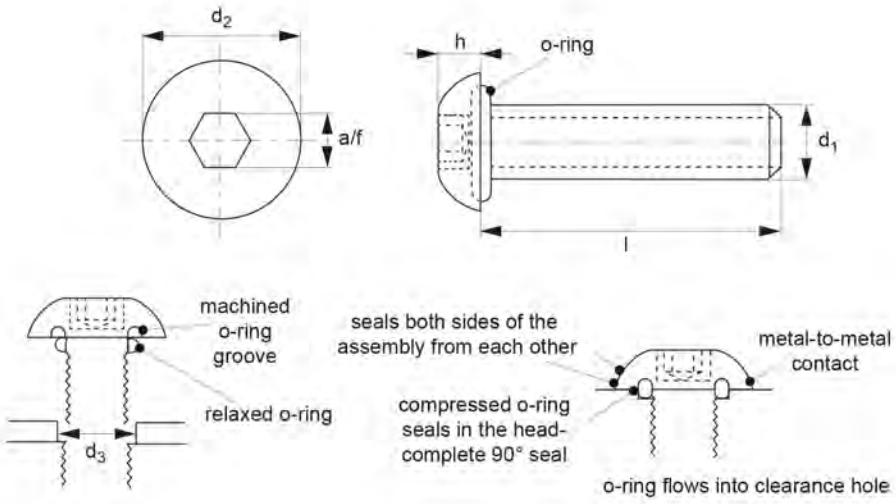



Part Number	d1	l1	h1 max	d2 max	A/F	d3 ±0.05	Material
20224592	M6	25.0	3.3	10.5	4.0	6.8	303 Stainless Steel
20226015	M6	25.0	3.3	10.5	4.0	6.8	316 Stainless Steel
20224608	M6	30.0	3.3	10.5	4.0	6.8	303 Stainless Steel
20226022	M6	30.0	3.3	10.5	4.0	6.8	316 Stainless Steel
20224615	M8	12.0	4.4	14.0	5.0	8.5	303 Stainless Steel
20226039	M8	12.0	4.4	14.0	5.0	8.5	316 Stainless Steel
20224622	M8	16.0	4.4	14.0	5.0	8.5	303 Stainless Steel
20226046	M8	16.0	4.4	14.0	5.0	8.5	316 Stainless Steel
20224639	M8	20.0	4.4	14.0	5.0	8.5	303 Stainless Steel
20226053	M8	20.0	4.4	14.0	5.0	8.5	316 Stainless Steel
20224646	M8	25.0	4.4	14.0	5.0	8.5	303 Stainless Steel
20226060	M8	25.0	4.4	14.0	5.0	8.5	316 Stainless Steel
20224653	M8	30.0	4.4	14.0	5.0	8.5	303 Stainless Steel
20226077	M8	30.0	4.4	14.0	5.0	8.5	316 Stainless Steel
20224660	M10	16.0	5.5	17.5	6.0	10.6	303 Stainless Steel
20226084	M10	16.0	5.5	17.5	6.0	10.6	316 Stainless Steel
20224677	M10	20.0	5.5	17.5	6.0	10.6	303 Stainless Steel
20226091	M10	20.0	5.5	17.5	6.0	10.6	316 Stainless Steel
20224684	M10	25.0	5.5	17.5	6.0	10.6	303 Stainless Steel
20226107	M10	25.0	5.5	17.5	6.0	10.6	316 Stainless Steel

Button Head Seal Screws

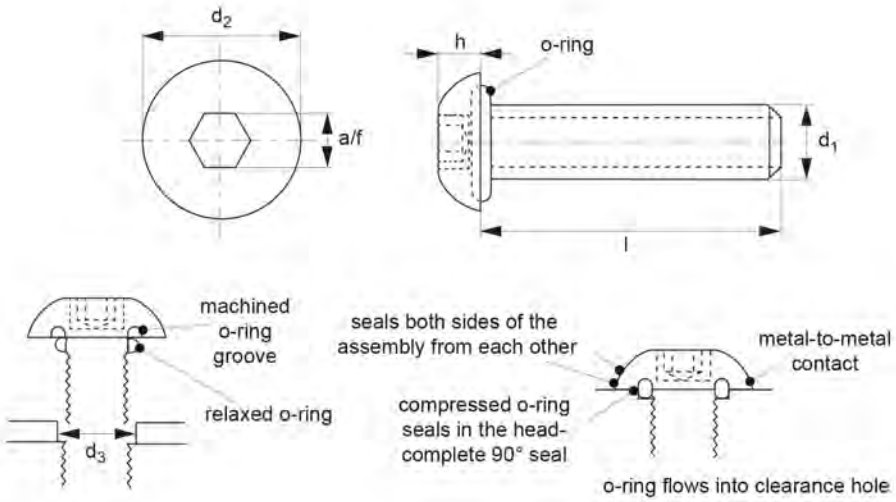



Part Number	d1	l1	h1 max	d2 max	A/F	d3 ±0.05	Material
20224691	M10	30.0	5.5	17.5	6.0	10.6	303 Stainless Steel
20226114	M10	30.0	5.5	17.5	6.0	10.6	316 Stainless Steel
20224707	M10	40.0	5.5	17.5	6.0	10.6	303 Stainless Steel
20226121	M10	40.0	5.5	17.5	6.0	10.6	316 Stainless Steel
20224714	M12	20.0	6.6	21.0	8.0	12.9	303 Stainless Steel
20226138	M12	20.0	6.6	21.0	8.0	12.9	316 Stainless Steel
20224721	M12	25.0	6.6	21.0	8.0	12.9	303 Stainless Steel
20226145	M12	25.0	6.6	21.0	8.0	12.9	316 Stainless Steel
20224738	M12	30.0	6.6	21.0	8.0	12.9	303 Stainless Steel
20226152	M12	30.0	6.6	21.0	8.0	12.9	316 Stainless Steel
20224745	M12	40.0	6.6	21.0	8.0	12.9	303 Stainless Steel
20226169	M12	40.0	6.6	21.0	8.0	12.9	316 Stainless Steel
20224752	M12	50.0	6.6	21.0	8.0	12.9	303 Stainless Steel
20226176	M12	50.0	6.6	21.0	8.0	12.9	316 Stainless Steel

Integral Seal Bolts

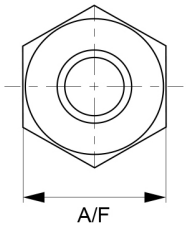

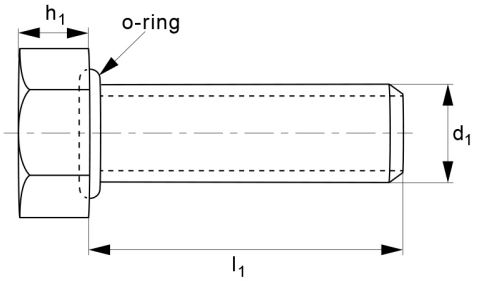

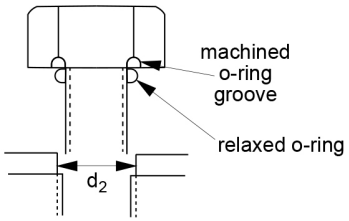

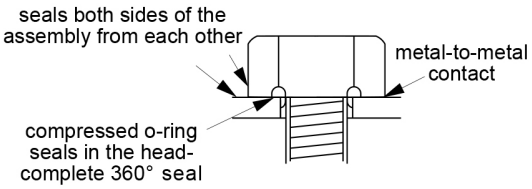



Features

- Designed with a sealing feature to provide a secure and watertight connection to various applications, minimising the risk of loosening due to vibration or movement.
- Prevent the entry of water, dust, or other contaminants, ensuring a secure, reliable connection.
- It has a hexagonal head and incorporates an O-ring which is compressed, squeezed between the head and the mating surface.

Specifications

Material: 316 Stainless Steel,
303 Stainless Steel

Sealing bolts are a type of fastener designed with an o-ring to provide secure bi-directional protection against contaminates such as gases and fluids in various applications, minimising the risk of damage to sensitive equipment. They prevent the entry of water, dust, or other contaminants, ensuring a secure, reliable connection.

This range of sealing bolts with a hexagonal head, incorporates an O-ring which is compressed, squeezed into a precision groove machined under the head of the bolt, and the mating surface to complete the seal. They are manufactured from stainless steel, which provides good corrosion resistance and is slightly magnetic.

Integral Seal Bolts are used in threaded and non-threaded holes in applications such as pipes, valves or pumps. Sealing bolts are used in threaded and non-threaded holes in applications such as cabinets or used in the automotive and electric industries. Please note: Our seal bolts are designed for use in applications where sealing properties are required. It could be confused with standard fasteners, these do not require sealing properties and with an O-ring you will not get a sealing property like you get with seal screws and may damage the ring.

Integral Seal Bolts

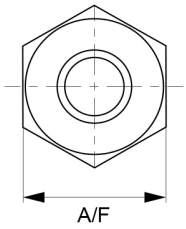

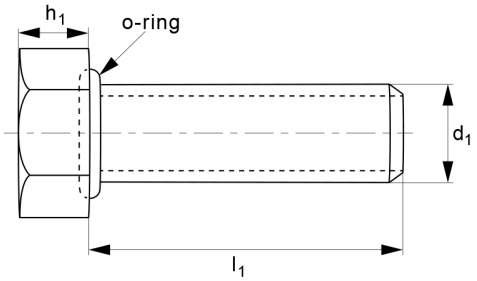

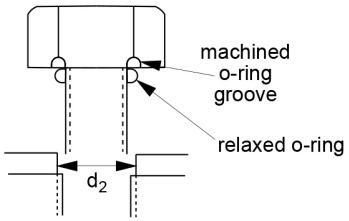

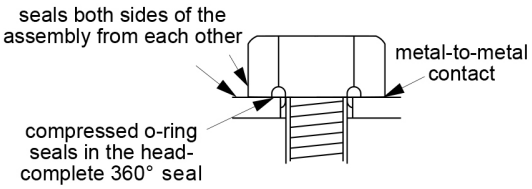



Part Number	d1	l1	A/F	h1 max	d2 ±0.05	Material
20257958	M2	4.0	4.0	1.6	2.35	303 Stainless Steel
20262525	M2	4.0	4.0	1.6	2.35	316 Stainless Steel
20257965	M2	8.0	4.0	1.6	2.35	303 Stainless Steel
20257972	M2	10.0	4.0	1.6	2.35	303 Stainless Steel
20257989	M2	12.0	4.0	1.6	2.35	303 Stainless Steel
20257996	M2	20.0	4.0	1.6	2.35	303 Stainless Steel
20262495	M3	6.0	5.5	2.2	3.6	316 Stainless Steel
20258023	M3	8.0	5.5	2.2	3.6	303 Stainless Steel
20258030	M3	8.0	5.5	2.2	3.6	316 Stainless Steel
20258047	M3	10.0	5.5	2.2	3.6	303 Stainless Steel
20258054	M3	10.0	5.5	2.2	3.6	316 Stainless Steel
20258061	M3	12.0	5.5	2.2	3.6	303 Stainless Steel
20258078	M3	12.0	5.5	2.2	3.6	316 Stainless Steel
20258085	M3	20.0	5.5	2.2	3.6	303 Stainless Steel
20258092	M3	20.0	5.5	2.2	3.6	316 Stainless Steel
20258108	M4	6.0	7.0	3.0	4.5	303 Stainless Steel
20258115	M4	6.0	7.0	3.0	4.5	316 Stainless Steel
20258122	M4	8.0	7.0	3.0	4.5	303 Stainless Steel
20258139	M4	8.0	7.0	3.0	4.5	316 Stainless Steel
20258146	M4	10.0	7.0	3.0	4.5	303 Stainless Steel
20258153	M4	10.0	7.0	3.0	4.5	316 Stainless Steel

Integral Seal Bolts

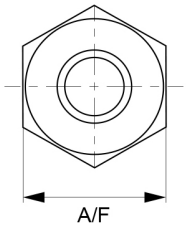

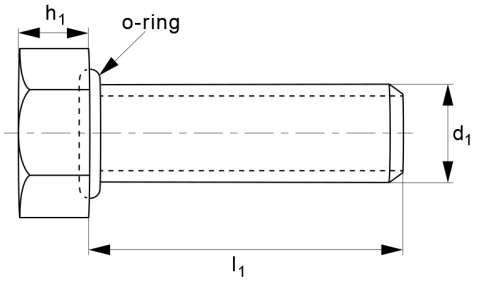

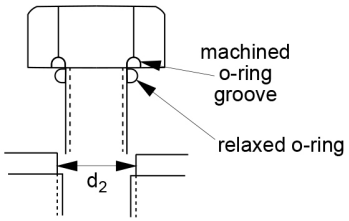

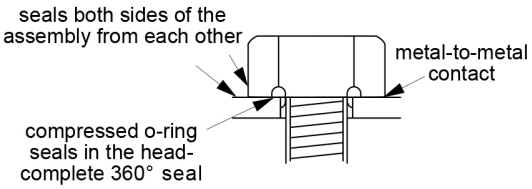



Part Number	d1	l1	A/F	h1 max	d2 ±0.05	Material
20258160	M4	12.0	7.0	3.0	4.5	303 Stainless Steel
20258177	M4	12.0	7.0	3.0	4.5	316 Stainless Steel
20258726	M4	16.0	7.0	3.0	4.5	303 Stainless Steel
20258733	M4	16.0	7.0	3.0	4.5	316 Stainless Steel
20258184	M4	20.0	7.0	3.0	4.5	303 Stainless Steel
20258191	M4	20.0	7.0	3.0	4.5	316 Stainless Steel
20258207	M5	8.0	8.0	3.7	5.6	303 Stainless Steel
20258214	M5	8.0	8.0	3.7	5.6	316 Stainless Steel
20258221	M5	10.0	8.0	3.7	5.6	303 Stainless Steel
20258238	M5	10.0	8.0	3.7	5.6	316 Stainless Steel
20258245	M5	12.0	8.0	3.7	5.6	303 Stainless Steel
20258252	M5	12.0	8.0	3.7	5.6	316 Stainless Steel
20258269	M5	16.0	8.0	3.7	5.6	303 Stainless Steel
20258276	M5	16.0	8.0	3.7	5.6	316 Stainless Steel
20258283	M5	20.0	8.0	3.7	5.6	303 Stainless Steel
20258290	M5	20.0	8.0	3.7	5.6	316 Stainless Steel
20258306	M6	12.0	10.0	4.2	6.8	303 Stainless Steel
20258313	M6	12.0	10.0	4.2	6.8	316 Stainless Steel
20258320	M6	16.0	10.0	4.2	6.8	303 Stainless Steel
20258337	M6	16.0	10.0	4.2	6.8	316 Stainless Steel
20258344	M6	20.0	10.0	4.2	6.8	303 Stainless Steel

Integral Seal Bolts

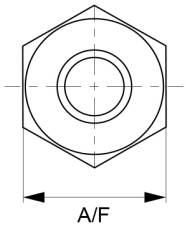

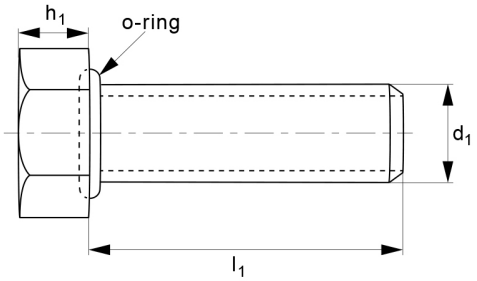

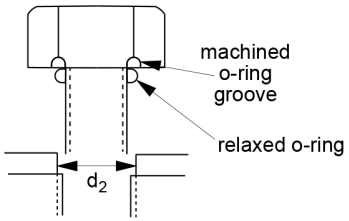

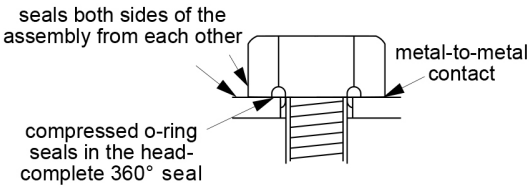



Part Number	d1	l1	A/F	h1 max	d2 ±0.05	Material
20258351	M6	20.0	10.0	4.2	6.8	316 Stainless Steel
20258368	M6	25.0	10.0	4.2	6.8	303 Stainless Steel
20258375	M6	25.0	10.0	4.2	6.8	316 Stainless Steel
20258382	M6	30.0	10.0	4.2	6.8	303 Stainless Steel
20258399	M6	30.0	10.0	4.2	6.8	316 Stainless Steel
20258405	M8	12.0	13.0	5.5	8.5	303 Stainless Steel
20258412	M8	12.0	13.0	5.5	8.5	316 Stainless Steel
20258429	M8	16.0	13.0	5.5	8.5	303 Stainless Steel
20258436	M8	16.0	13.0	5.5	8.5	316 Stainless Steel
20258443	M8	20.0	13.0	5.5	8.5	303 Stainless Steel
20258450	M8	20.0	13.0	5.5	8.5	316 Stainless Steel
20258467	M8	25.0	13.0	5.5	8.5	303 Stainless Steel
20258474	M8	25.0	13.0	5.5	8.5	316 Stainless Steel
20258481	M8	30.0	13.0	5.5	8.5	303 Stainless Steel
20258498	M8	30.0	13.0	5.5	8.5	316 Stainless Steel
20258016	M8	40.0	13.0	5.5	8.5	303 Stainless Steel
20258764	M8	40.0	13.0	5.5	8.5	316 Stainless Steel
20258504	M10	16.0	16.0	6.6	10.6	303 Stainless Steel
20258511	M10	16.0	16.0	6.6	10.6	316 Stainless Steel
20258528	M10	20.0	16.0	6.6	10.6	303 Stainless Steel
20258535	M10	20.0	16.0	6.6	10.6	316 Stainless Steel

Integral Seal Bolts

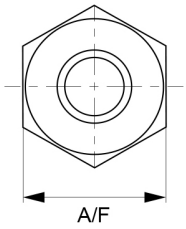

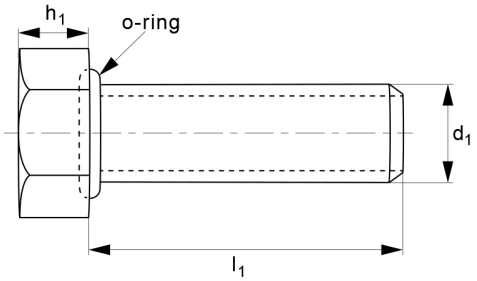

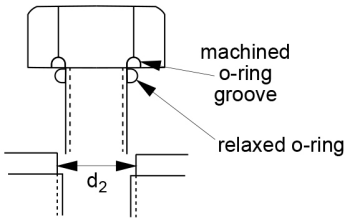

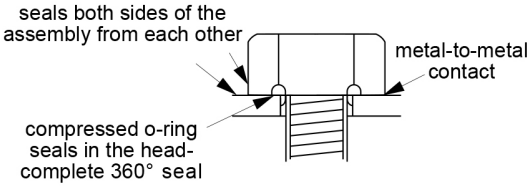



Part Number	d1	l1	A/F	h1 max	d2 ±0.05	Material
20258542	M10	25.0	16.0	6.6	10.6	303 Stainless Steel
20258559	M10	25.0	16.0	6.6	10.6	316 Stainless Steel
20258566	M10	30.0	16.0	6.6	10.6	303 Stainless Steel
20258573	M10	30.0	16.0	6.6	10.6	316 Stainless Steel
20258580	M10	40.0	16.0	6.6	10.6	303 Stainless Steel
20258597	M10	40.0	16.0	6.6	10.6	316 Stainless Steel
20258740	M10	50.0	16.0	6.6	10.6	303 Stainless Steel
20258757	M10	50.0	16.0	6.6	10.6	316 Stainless Steel
20258603	M12	20.0	18.0	7.7	12.85	303 Stainless Steel
20258610	M12	20.0	18.0	7.7	12.85	316 Stainless Steel
20258627	M12	25.0	18.0	7.7	12.85	303 Stainless Steel
20258634	M12	25.0	18.0	7.7	12.85	316 Stainless Steel
20258641	M12	30.0	18.0	7.7	12.85	303 Stainless Steel
20258658	M12	30.0	18.0	7.7	12.85	316 Stainless Steel
20258665	M12	40.0	18.0	7.7	12.85	303 Stainless Steel
20258672	M12	40.0	18.0	7.7	12.85	316 Stainless Steel
20258689	M12	50.0	18.0	7.7	12.85	303 Stainless Steel
20258696	M12	50.0	18.0	7.7	12.85	316 Stainless Steel

Integral Seal Domed Nuts

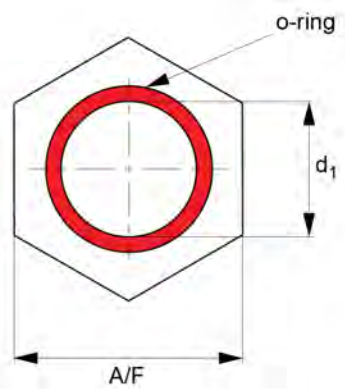

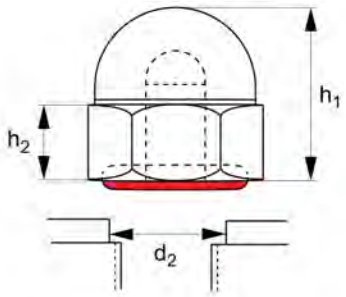

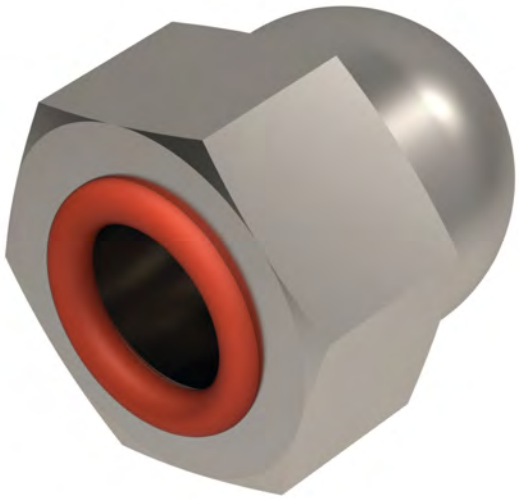

Features

- Integrated sealing feature, combining the functionality of a nut and a sealing component into a single unit.
- Reliable and watertight connection while simplifying the assembly process and eliminating the need for additional sealing components.
- Suitable for temperatures from -100C to +260C and are reusable.

Specifications

Material: 316 Stainless Steel,
303 Stainless Steel

Integral Seal Nuts are a type of fastener with an integrated sealing feature, combining the functionality of a nut and a sealing component into a single unit. These nuts provide reliable protection while simplifying the assembly process and eliminating the need for additional sealing components. They prevent the entry of water, dust, or other contaminants providing bi-directional sealing.

This range of Integral Seal Domed nuts incorporates an O-ring which is compressed and squeezed between the nut and mating component.

They are suitable for temperatures from -100C to +260C and are reusable. Integral Seal Nuts are used in applications such as cabinets or used in the automotive, machinery and electric industries.

Integral Seal Domed Nuts

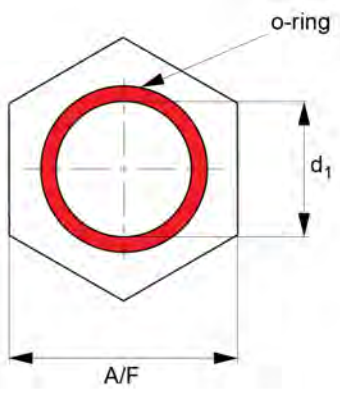

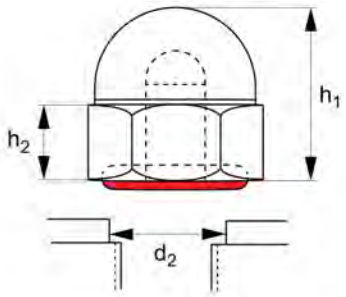

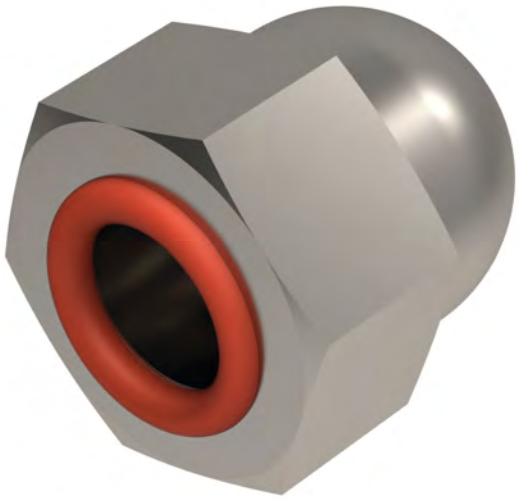

Part Number	d1	A/F	d2 ±0.05	h1	h2	Material
20207700	M3	5.5	3.6	6.0	2.4	303 Stainless Steel
20207717	M3	5.5	3.6	6.0	2.4	316 Stainless Steel
20207724	M4	7.0	4.5	8.0	3.2	303 Stainless Steel
20207489	M4	7.0	4.5	8.0	3.2	303 Stainless Steel
20207731	M4	7.0	4.5	8.0	3.2	316 Stainless Steel
20207748	M5	8.0	5.6	10.0	4.0	303 Stainless Steel
20207885	M5	8.0	5.6	10.0	4.0	303 Stainless Steel
20207755	M5	8.0	5.6	10.0	4.0	316 Stainless Steel
20207762	M6	10.0	6.8	12.0	5.0	303 Stainless Steel
20207496	M6	10.0	6.8	12.0	5.0	303 Stainless Steel
20207779	M6	10.0	6.8	12.0	5.0	316 Stainless Steel
20207786	M8	13.0	8.5	15.0	6.5	303 Stainless Steel
20207793	M8	13.0	8.5	15.0	6.5	316 Stainless Steel
20207809	M10	17.0	10.6	18.0	8.0	303 Stainless Steel
20207816	M10	17.0	10.6	18.0	8.0	316 Stainless Steel
20207823	M12	19.0	12.85	22.0	10.0	303 Stainless Steel
20207830	M12	19.0	12.85	22.0	10.0	316 Stainless Steel
20207847	M16	24.0	17.5	28.0	13.0	303 Stainless Steel
20207854	M16	24.0	17.5	28.0	13.0	316 Stainless Steel

Integral Seal Hex Nuts

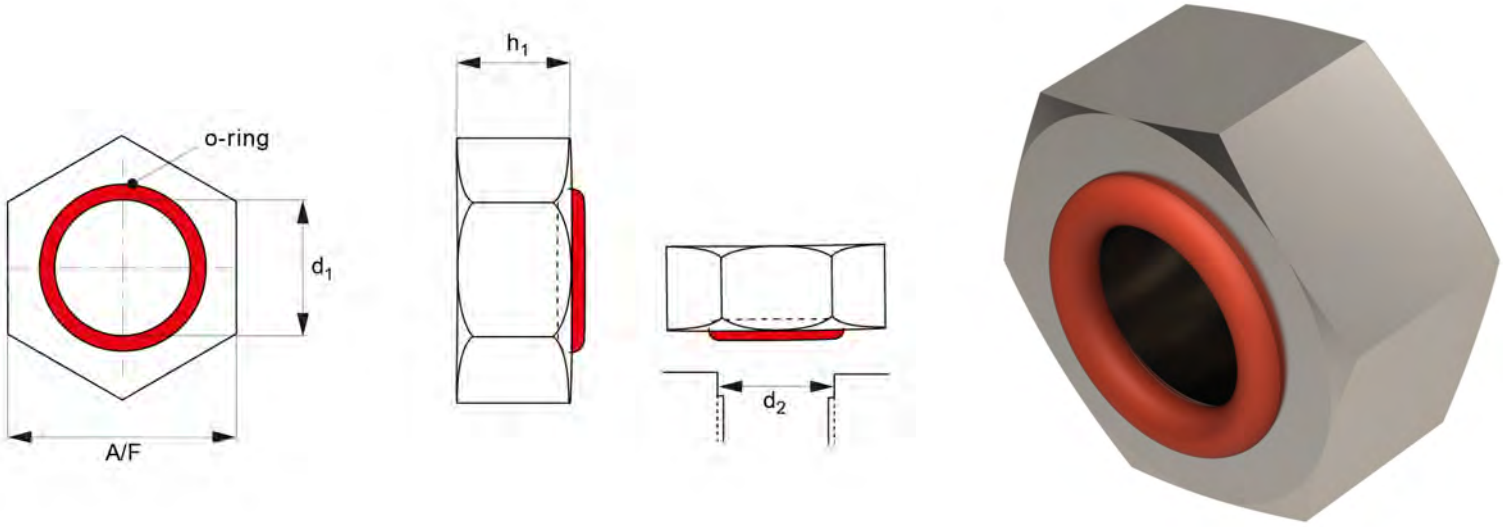

Features

- It provides a reliable and watertight connection while simplifying the assembly process and eliminating the need for additional sealing components.
- It incorporates an O-ring which is compressed and squeezed between the nut and the mating surface.
- Suitable for temperatures from -100C to +260C and are reusable.

Specifications

Material: 316 Stainless Steel,
303 Stainless Steel

Integral Seal Nuts are a type of fastener with an integrated sealing feature, combining the functionality of a nut and a sealing component into a single unit. These nuts provide reliable protection while simplifying the assembly process and eliminating the need for additional sealing components. They prevent the entry of water, dust, or other contaminants providing bi-directional sealing.

This range of Integral Seal hexagonal nuts incorporates an O-ring which is compressed and squeezed between the nut and mating component.

They are suitable for temperatures from -100C to +260C and are reusable. Integral Seal Nuts are used in applications such as cabinets or used in the automotive, machinery and electric industries.

Integral Seal Hex Nuts

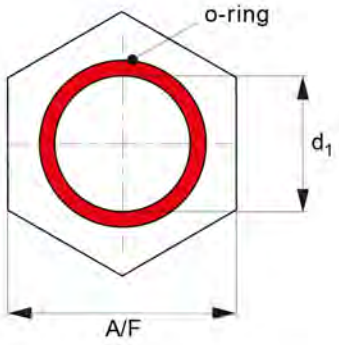

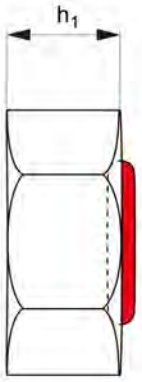

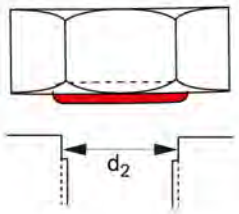

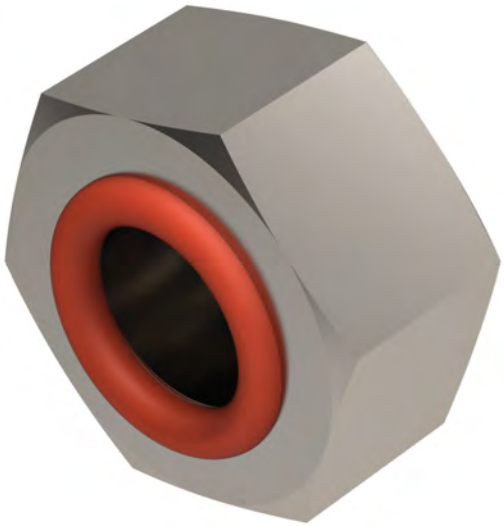

Part Number	d1	A/F	d2 ±0.05	h1 max	Material
20207861	M2	4.0	2.35	1.6	303 Stainless Steel
20207878	M2	4.0	2.35	1.6	316 Stainless Steel
20207502	M2.5	5.0	2.75	2.0	303 Stainless Steel
20207519	M2.5	5.0	2.75	2.0	316 Stainless Steel
20207526	M3	5.5	3.6	2.4	303 Stainless Steel
20207892	M3	5.5	3.6	2.4	303 Stainless Steel
20207533	M3	5.5	3.6	2.4	316 Stainless Steel
20207540	M4	7.0	4.5	3.2	303 Stainless Steel
20207557	M4	7.0	4.5	3.2	316 Stainless Steel
20207564	M5	8.0	5.6	4.7	303 Stainless Steel
20207571	M5	8.0	5.6	4.7	316 Stainless Steel
20207588	M6	10.0	6.8	5.2	303 Stainless Steel
20207595	M6	10.0	6.8	5.2	316 Stainless Steel
20207472	M6	10.0	6.8	5.2	316 Stainless Steel
20207601	M8	13.0	8.5	6.8	303 Stainless Steel
20207618	M8	13.0	8.5	6.8	316 Stainless Steel
20207625	M10	16.0	10.6	8.4	303 Stainless Steel
20207632	M10	16.0	10.6	8.4	316 Stainless Steel
20207649	M12	18.0	12.85	10.8	303 Stainless Steel
20207656	M12	18.0	12.85	10.8	316 Stainless Steel

Integral Seal Hex Nuts

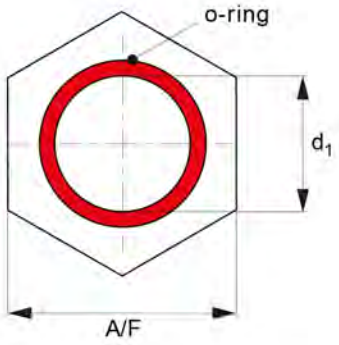

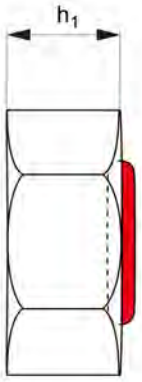

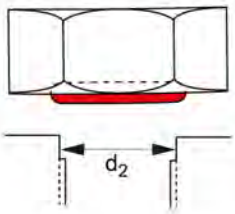

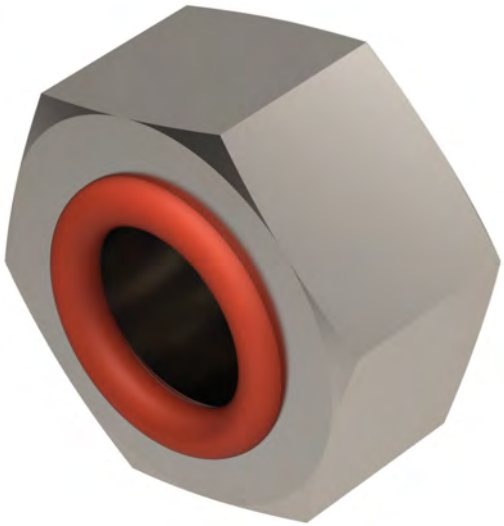

Part Number	d1	A/F	d2 ±0.05	h1 max	Material
20207663	M14	21.0	15.1	12.8	303 Stainless Steel
20207670	M14	21.0	15.1	12.8	316 Stainless Steel
20207687	M16	24.0	17.5	14.8	303 Stainless Steel
20207694	M16	24.0	17.5	14.8	316 Stainless Steel

Pan Head Seal Screws

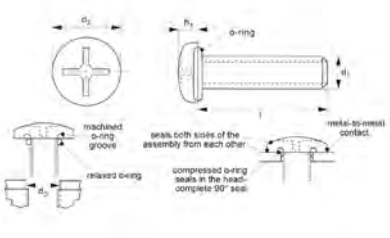

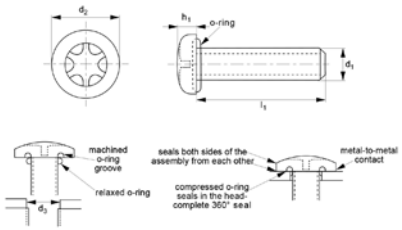



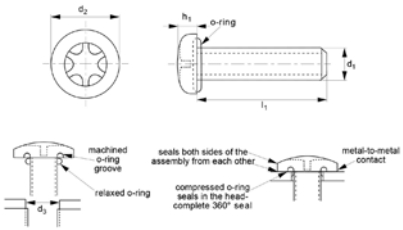

Features

- It provides a secure and watertight connection to various applications, minimising the risk of loosening due to vibration or movement.
- Used in threaded and non-threaded holes in applications such as cabinets or used in the automotive and electric industries.
- Incorporate an O-ring which is compressed and squeezed between the head and the the mating surface to complete a more secure seal.

Specifications

Material: 303 Stainless Steel

This range of sealing screws has a pan head with three options: Torx drive, Philips drive and Slotted drive. Torx drive screws provide a positive, fast engagement that transmits torque with less downward pressure. Phillips drive screws can withstand high torque, making them a good choice for applications that require a tight fit and make it easy to remove the screw, even if it has been driven in tightly. Finally, slotted drive screws have a lower torque capacity than other drive types, such as Phillips or Torx.These screws incorporate an O-ring which is compressed and squeezed between the head and the mating component to complete a more secure seal. They are manufactured from stainless steel, which provides good corrosion resistance and is slightly magnetic.

This seal screws with a pan head are a type of fastener designed with an o-ring to provide secure bi-directional protection against contaminates such as gases and fluids in various applications, minimising the risk of damage to sensitive equipment. They prevent the entry of water, dust, or other contaminants, ensuring a secure, reliable connection.

Seal screws are used in threaded and non-threaded holes in applications such as cabinets or used in the automotive and electric industries.

Pan Head Seal Screws

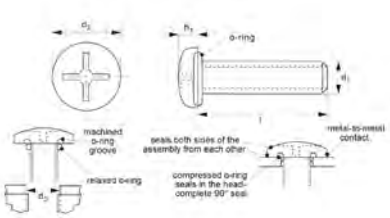

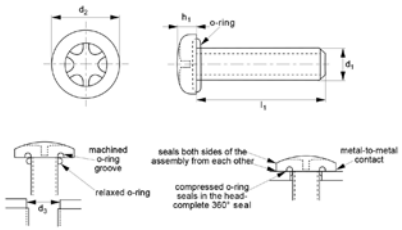



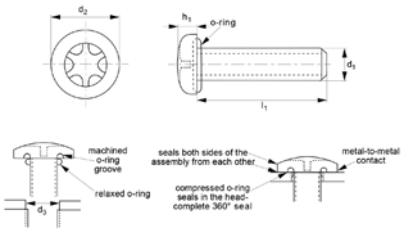

Part Number	d1	l1	h1 max	d2 max	d3 ±0.05	Drive Type	O-Ring Material
20227708	M2	3.0	1.6	4.0	2.35	Philips Drive	Silicone
20223601	M2	4.0	1.6	4.0	2.35	Philips Drive	Silicone
20223618	M2	8.0	1.6	4.0	2.35	Philips Drive	Silicone
20223625	M2	10.0	1.6	4.0	2.35	Philips Drive	Silicone
20223632	M2	12.0	1.6	4.0	2.35	Philips Drive	Silicone
20223991	M2	4.0	1.3	4.0	2.35	Slotted Drive	Silicone
20224004	M2	8.0	1.3	4.0	2.35	Slotted Drive	Silicone
20224011	M2	10.0	1.3	4.0	2.35	Slotted Drive	Silicone
20224028	M2	12.0	1.3	4.0	2.35	Slotted Drive	Silicone
20223649	M2.5	6.0	2.1	4.7	2.75	Philips Drive	Silicone
20223656	M2.5	8.0	2.1	4.7	2.75	Philips Drive	Silicone
20223663	M2.5	10.0	2.1	4.7	2.75	Philips Drive	Silicone
20223670	M2.5	12.0	2.1	4.7	2.75	Philips Drive	Silicone
20228705	M2.5	16.0	2.1	4.7	2.75	Philips Drive	Silicone
20228712	M2.5	20.0	2.1	4.7	2.75	Philips Drive	Silicone
20228729	M2.5	25.0	2.1	4.7	2.75	Philips Drive	Silicone
20228736	M2.5	30.0	2.1	4.7	2.75	Philips Drive	Silicone
20228743	M2.5	35.0	2.1	4.7	2.75	Philips Drive	Silicone
20224035	M2.5	6.0	1.5	5.0	2.75	Slotted Drive	Silicone
20224042	M2.5	8.0	1.5	5.0	2.75	Slotted Drive	Silicone
20224059	M2.5	10.0	1.5	5.0	2.75	Slotted Drive	Silicone
20224066	M2.5	12.0	1.5	5.0	2.75	Slotted Drive	Silicone

Pan Head Seal Screws

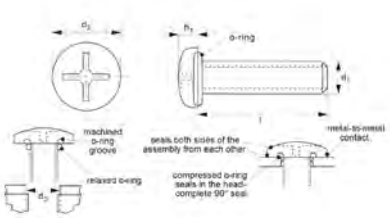

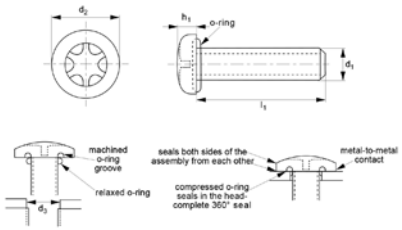

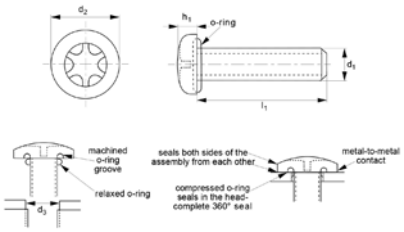



Part Number	d1	l1	h1 max	d2 max	d3 ±0.05	Drive Type	O-Ring Material
20223687	M3	6.0	2.4	6.0	3.6	Philips Drive	Silicone
20223694	M3	8.0	2.4	6.0	3.6	Philips Drive	Silicone
20223700	M3	10.0	2.4	6.0	3.6	Philips Drive	Silicone
20223717	M3	12.0	2.4	6.0	3.6	Philips Drive	Silicone
20225780	M3	16.0	2.4	6.0	3.6	Philips Drive	Silicone
20223724	M3	20.0	2.4	6.0	3.6	Philips Drive	Silicone
20228750	M3	30.0	2.4	6.0	3.6	Philips Drive	Silicone
20228767	M3	35.0	2.4	6.0	3.6	Philips Drive	Silicone
20228774	M3	40.0	2.4	6.0	3.6	Philips Drive	Silicone
20224080	M3	6.0	1.8	6.0	3.6	Slotted Drive	Silicone
20224097	M3	8.0	1.8	6.0	3.6	Slotted Drive	Silicone
20224103	M3	10.0	1.8	6.0	3.6	Slotted Drive	Silicone
20224127	M3	12.0	1.8	6.0	3.6	Slotted Drive	Silicone
20224134	M3	20.0	1.8	6.0	3.6	Slotted Drive	Silicone
20225452	M3	6.0	2.4	6.0	3.6	Torx Drive	Silicone
20225469	M3	8.0	2.4	6.0	3.6	Torx Drive	Silicone
20225476	M3	10.0	2.4	6.0	3.6	Torx Drive	Silicone
20225483	M3	12.0	2.4	6.0	3.6	Torx Drive	Silicone
20225490	M3	20.0	2.4	6.0	3.6	Torx Drive	Silicone
20223731	M4	6.0	3.1	8.0	4.5	Philips Drive	Silicone
20223748	M4	8.0	3.1	8.0	4.5	Philips Drive	Silicone
20227661	M4	8.0	3.1	8.0	4.5	Philips Drive	Viton

Pan Head Seal Screws

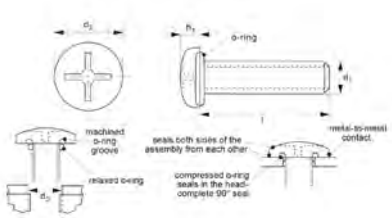

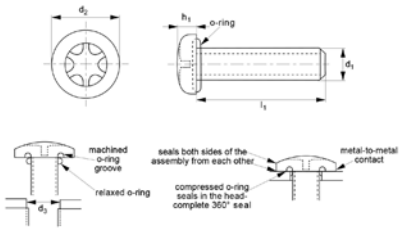



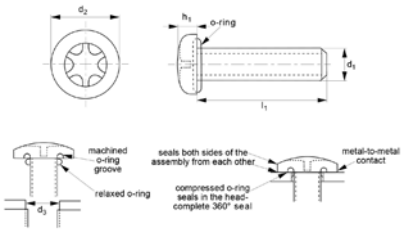

Part Number	d1	l1	h1 max	d2 max	d3 ±0.05	Drive Type	O-Ring Material
20223755	M4	10.0	3.1	8.0	4.5	Philips Drive	Silicone
20223762	M4	12.0	3.1	8.0	4.5	Philips Drive	Silicone
20225735	M4	16.0	3.1	8.0	4.5	Philips Drive	Silicone
20223779	M4	20.0	3.1	8.0	4.5	Philips Drive	Silicone
20228781	M4	30.0	3.1	8.0	4.5	Philips Drive	Silicone
20228798	M4	35.0	3.1	8.0	4.5	Philips Drive	Silicone
20228804	M4	40.0	3.1	8.0	4.5	Philips Drive	Silicone
20224141	M4	6.0	2.4	8.0	4.5	Slotted Drive	Silicone
20222512	M4	6.0	2.4	8.0	4.5	Slotted Drive	Viton
20224158	M4	8.0	2.4	8.0	4.5	Slotted Drive	Silicone
20224165	M4	10.0	2.4	8.0	4.5	Slotted Drive	Silicone
20225742	M4	10.0	2.4	8.0	4.5	Slotted Drive	Viton
20224172	M4	12.0	2.4	8.0	4.5	Slotted Drive	Silicone
20225810	M4	16.0	2.4	8.0	4.5	Slotted Drive	Silicone
20224189	M4	20.0	2.4	8.0	4.5	Slotted Drive	Silicone
20225506	M4	6.0	3.3	8.0	4.5	Torx Drive	Silicone
20225513	M4	8.0	3.3	8.0	4.5	Torx Drive	Silicone
20225520	M4	10.0	3.3	8.0	4.5	Torx Drive	Silicone
20225537	M4	12.0	3.3	8.0	4.5	Torx Drive	Silicone
20225544	M4	16.0	3.3	8.0	4.5	Torx Drive	Silicone
20225551	M4	20.0	3.3	8.0	4.5	Torx Drive	Silicone
20223786	M5	8.0	3.7	10.0	5.6	Philips Drive	Silicone

Pan Head Seal Screws

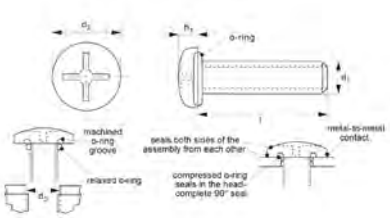

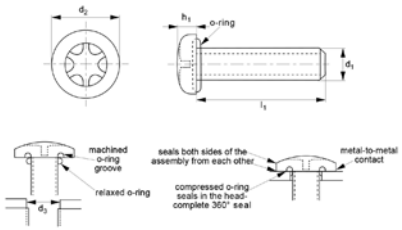



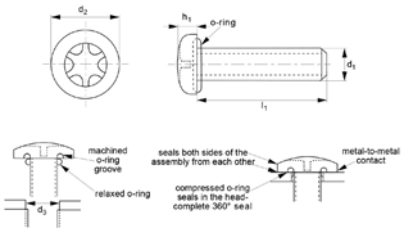

Part Number	d1	l1	h1 max	d2 max	d3 ±0.05	Drive Type	O-Ring Material
20223793	M5	10.0	3.7	10.0	5.6	Philips Drive	Silicone
20223809	M5	12.0	3.7	10.0	5.6	Philips Drive	Silicone
20223816	M5	16.0	3.7	10.0	5.6	Philips Drive	Silicone
20223823	M5	20.0	1.6	10.0	5.6	Philips Drive	Silicone
20228811	M5	30.0	1.6	10.0	5.6	Philips Drive	Silicone
20228828	M5	35.0	1.6	10.0	5.6	Philips Drive	Silicone
20228835	M5	40.0	1.6	10.0	5.6	Philips Drive	Silicone
20224196	M5	8.0	3.0	10.0	5.6	Slotted Drive	Silicone
20224202	M5	10.0	3.0	10.0	5.6	Slotted Drive	Silicone
20224219	M5	12.0	3.0	10.0	5.6	Slotted Drive	Silicone
20224226	M5	16.0	3.0	10.0	5.6	Slotted Drive	Silicone
20224233	M5	20.0	3.0	10.0	5.6	Slotted Drive	Silicone
20225568	M5	8.0	3.7	10.0	5.6	Torx Drive	Silicone
20225575	M5	10.0	3.7	10.0	5.6	Torx Drive	Silicone
20225582	M5	12.0	3.7	10.0	5.6	Torx Drive	Silicone
20225599	M5	16.0	3.7	10.0	5.6	Torx Drive	Silicone
20225605	M5	20.0	1.6	10.0	5.6	Torx Drive	Silicone
20223830	M6	12.0	4.6	12.0	6.8	Philips Drive	Silicone
20244729	M6	12.0	4.6	12.0	6.8	Philips Drive	Viton
20223847	M6	16.0	4.6	12.0	6.8	Philips Drive	Silicone
20223854	M6	20.0	4.6	12.0	6.8	Philips Drive	Silicone
20223861	M6	25.0	4.6	12.0	6.8	Philips Drive	Silicone

Pan Head Seal Screws

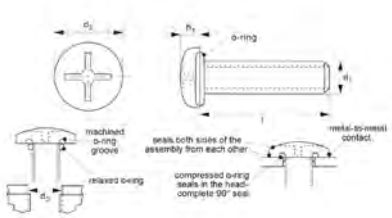

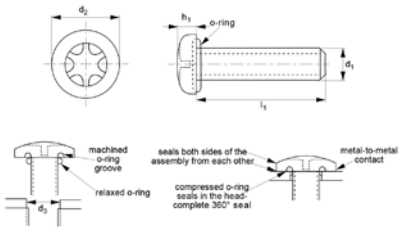



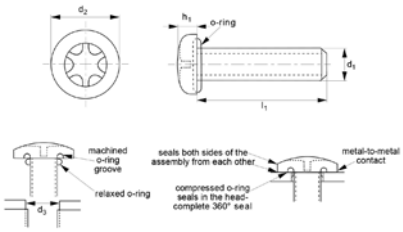

Part Number	d1	l1	h1 max	d2 max	d3 ±0.05	Drive Type	O-Ring Material
20223878	M6	30.0	4.6	12.0	6.8	Philips Drive	Silicone
20228842	M6	35.0	4.6	12.0	6.8	Philips Drive	Silicone
20228859	M6	40.0	4.6	12.0	6.8	Philips Drive	Silicone
20228866	M6	45.0	4.6	12.0	6.8	Philips Drive	Silicone
20228873	M6	50.0	4.6	12.0	6.8	Philips Drive	Silicone
20224240	M6	12.0	3.6	12.0	6.8	Slotted Drive	Silicone
20224257	M6	16.0	3.6	12.0	6.8	Slotted Drive	Silicone
20224271	M6	20.0	3.6	12.0	6.8	Slotted Drive	Silicone
20224288	M6	25.0	3.6	12.0	6.8	Slotted Drive	Silicone
20224295	M6	30.0	3.6	12.0	6.8	Slotted Drive	Silicone
20225612	M6	12.0	4.6	12.0	6.8	Torx Drive	Silicone
20225629	M6	16.0	4.6	12.0	6.8	Torx Drive	Silicone
20225636	M6	20.0	4.6	12.0	6.8	Torx Drive	Silicone
20225643	M6	25.0	4.6	12.0	6.8	Torx Drive	Silicone
20225650	M6	30.0	4.6	12.0	6.8	Torx Drive	Silicone
20223885	M8	12.0	6.0	16.0	8.5	Philips Drive	Silicone
20223892	M8	16.0	6.0	16.0	8.5	Philips Drive	Silicone
20223908	M8	20.0	6.0	16.0	8.5	Philips Drive	Silicone
20228514	M8	20.0	6.0	16.0	8.5	Philips Drive	Viton
20223915	M8	25.0	6.0	16.0	8.5	Philips Drive	Silicone
20223922	M8	30.0	6.0	16.0	8.5	Philips Drive	Silicone
20228880	M8	40.0	6.0	16.0	8.5	Philips Drive	Silicone

Pan Head Seal Screws

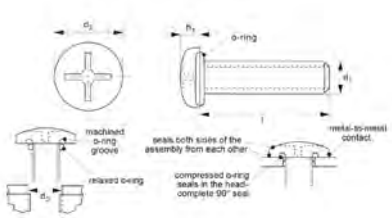

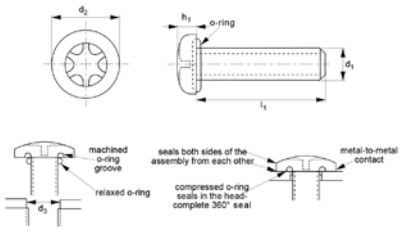



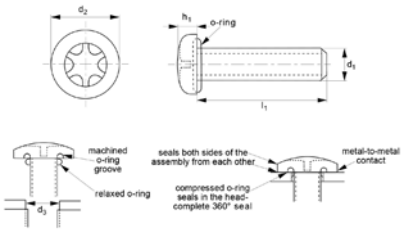

Part Number	d1	l1	h1 max	d2 max	d3 ±0.05	Drive Type	O-Ring Material
20228897	M8	50.0	6.0	16.0	8.5	Philips Drive	Silicone
20228903	M8	60.0	6.0	16.0	8.5	Philips Drive	Silicone
20224301	M8	12.0	4.8	16.0	8.5	Slotted Drive	Silicone
20224318	M8	16.0	4.8	16.0	8.5	Slotted Drive	Silicone
20224325	M8	20.0	4.8	16.0	8.5	Slotted Drive	Silicone
20224332	M8	25.0	4.8	16.0	8.5	Slotted Drive	Silicone
20224349	M8	30.0	4.8	16.0	8.5	Slotted Drive	Silicone
20225667	M8	12.0	6.0	16.0	8.5	Torx Drive	Silicone
20225674	M8	16.0	6.0	16.0	8.5	Torx Drive	Silicone
20225681	M8	20.0	6.0	16.0	8.5	Torx Drive	Silicone
20225698	M8	25.0	6.0	16.0	8.5	Torx Drive	Silicone
20225704	M8	30.0	6.0	16.0	8.5	Torx Drive	Silicone
20223939	M10	16.0	7.5	20.0	10.6	Philips Drive	Silicone
20223946	M10	20.0	7.5	20.0	10.6	Philips Drive	Silicone
20223953	M10	25.0	7.5	20.0	10.6	Philips Drive	Silicone
20223960	M10	30.0	7.5	20.0	10.6	Philips Drive	Silicone
20223977	M10	40.0	7.5	20.0	10.6	Philips Drive	Silicone
20229085	M10	40.0	7.5	20.0	10.6	Philips Drive	Viton
20224356	M10	16.0	6.0	20.0	10.6	Slotted Drive	Silicone
20224363	M10	20.0	6.0	20.0	10.6	Slotted Drive	Silicone
20224370	M10	25.0	6.0	20.0	10.6	Slotted Drive	Silicone
20224387	M10	30.0	6.0	20.0	10.6	Slotted Drive	Silicone
20224394	M10	40.0	6.0	20.0	10.6	Slotted Drive	Silicone

Seal Washers

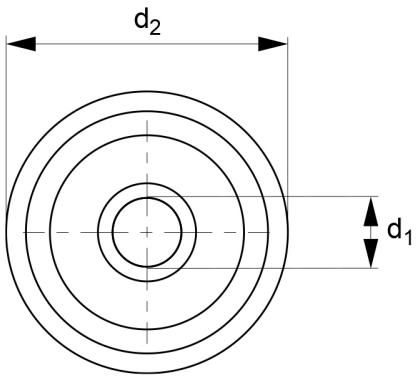

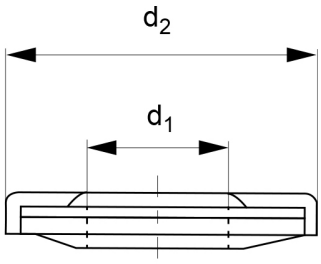



Features

- It prevents the leakage of fluids, gases or contaminants.
- Incorporates a silicone O-ring that helps it fit the surface and fill gaps or imperfections.
- Reusable and resistant to a temperature of -75C to +205C.

Specifications

Material: 316 Stainless Steel

Seal washers are used to provide a reliable and effective sealing solution. It features a design that creates a tight seal between two surfaces, preventing the leakage of fluids, gases or contaminants.

This range of Seal washers incorporates a silicone O-ring that helps it fit the surface and fill gaps or imperfections. They are manufactured from stainless steel, which provides good corrosion resistance and is slightly magnetic.

Seal washers are commonly used in industrial equipment and automotive applications. They are reusable and resistant to a temperature of -75C to +205C.

Seal Washers

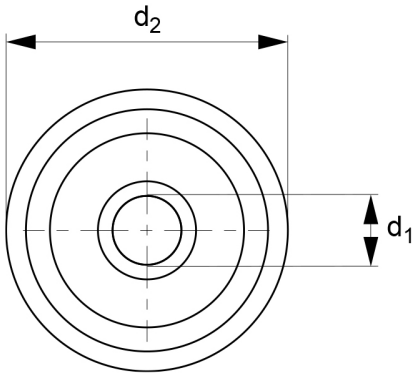

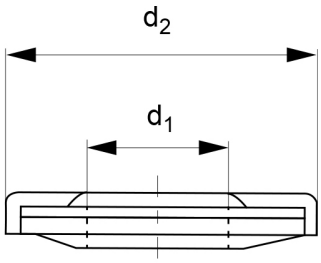

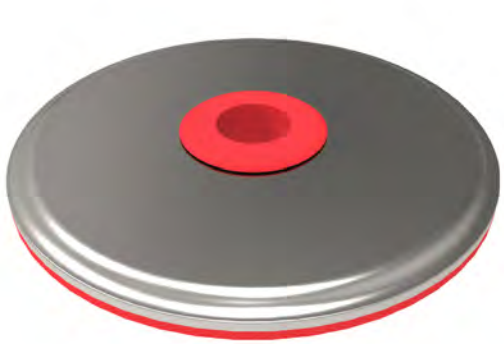

Part Number	For thread d1	d2	Material
20219673	M3	14.5	316 Stainless Steel
20219680	M3	25.5	316 Stainless Steel
20219703	M4	25.5	316 Stainless Steel
20219765	M5	14.5	316 Stainless Steel
20219710	M5	25.5	316 Stainless Steel
20219727	M6	25.5	316 Stainless Steel
20219734	M8	25.5	316 Stainless Steel
20219741	M10	25.5	316 Stainless Steel
20219758	M12	25.5	316 Stainless Steel

Cap Screws - Low Head

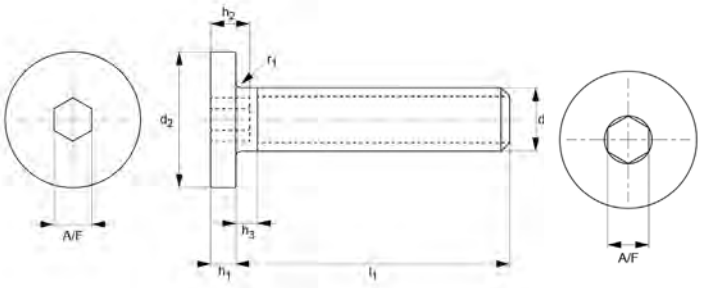

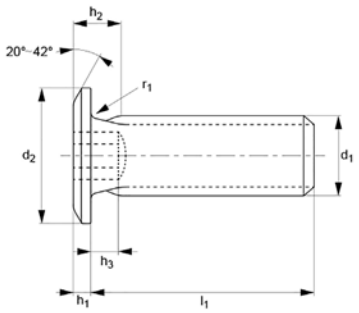



Features

- Low head reduces the screws head height space.
- They require no countersinking unlike flat head screws.
- Corrosion resistance.

Specifications

Material: Blackened Stainless 303, Blackened Stainless 316, 316 Stainless Steel, 303 Stainless Steel

This range of Cap Screws are available in a choice of hexagonal drive or torx drive. Hexagonal drives are ideal for precision assembly and are ideally used where less surface area is available. Torx drives provide a positive-engaging, fast-locating technique for transmitting drive torque with less necessary downward pressure. These Cap Screws are available in a choice of two low head options: ultra low head and extra low head.

The first of these options helps reduce the screws overall head height space, which means no countersinking is required, unlike flat head screws. The second option has an extremely low profile, and does not need a countersunk location hole. These screws are suitable for machine and equipment applications, with minimal clearance.

Cap Screws are commonly used with Threaded Captive Washers (sold separately). The screws are made from austenitic Stainless Steel that provides good resistance to corrosion and machinability. The material is a popular choice for construction and automotive applications.

Cap Screws - Low Head

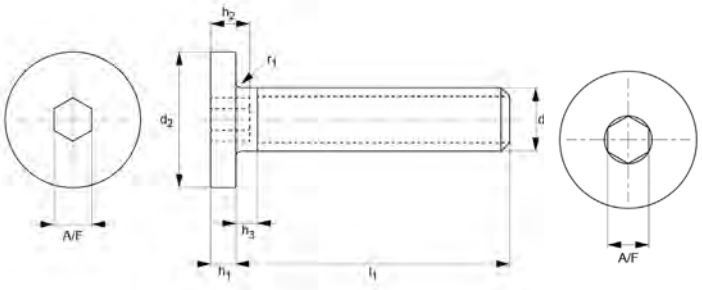

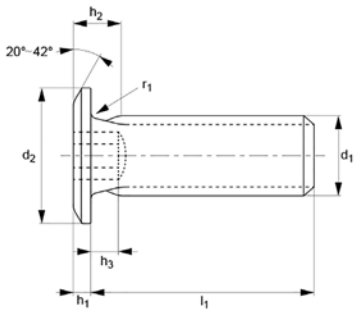



Part Number	Drive Type	l_1	h1	d_1	d_2	r_1	Material
20141462	Hex Drive	3.0	0.5	M2	4.0	0.1	303 Stainless Steel
20141479	Hex Drive	4.0	0.5	M2	4.0	0.1	303 Stainless Steel
20141486	Hex Drive	5.0	0.5	M2	4.0	0.1	303 Stainless Steel
20141493	Hex Drive	6.0	0.5	M2	4.0	0.1	303 Stainless Steel
20141509	Hex Drive	8.0	0.5	M2	4.0	0.1	303 Stainless Steel
20141516	Hex Drive	10.0	0.5	M2	4.0	0.1	303 Stainless Steel
20205041	Hex Drive	3.0	0.5	M2	4.0	0.10	316 Stainless Steel
20205416	Hex Drive	3.0	0.5	M2	4.0	0.10	Blackened Stainless 303
20205782	Hex Drive	3.0	0.5	M2	4.0	0.10	Blackened Stainless 316
20205058	Hex Drive	4.0	0.5	M2	4.0	0.10	316 Stainless Steel
20205423	Hex Drive	4.0	0.5	M2	4.0	0.10	Blackened Stainless 303
20205799	Hex Drive	4.0	0.5	M2	4.0	0.10	Blackened Stainless 316
20205065	Hex Drive	5.0	0.5	M2	4.0	0.10	316 Stainless Steel
20205430	Hex Drive	5.0	0.5	M2	4.0	0.10	Blackened Stainless 303
20205805	Hex Drive	5.0	0.5	M2	4.0	0.10	Blackened Stainless 316
20205072	Hex Drive	6.0	0.5	M2	4.0	0.10	316 Stainless Steel
20205447	Hex Drive	6.0	0.5	M2	4.0	0.10	Blackened Stainless 303
20205812	Hex Drive	6.0	0.5	M2	4.0	0.10	Blackened Stainless 316
20205089	Hex Drive	8.0	0.5	M2	4.0	0.10	316 Stainless Steel
20205454	Hex Drive	8.0	0.5	M2	4.0	0.10	Blackened Stainless 303
20205829	Hex Drive	8.0	0.5	M2	4.0	0.10	Blackened Stainless 316

Cap Screws - Low Head

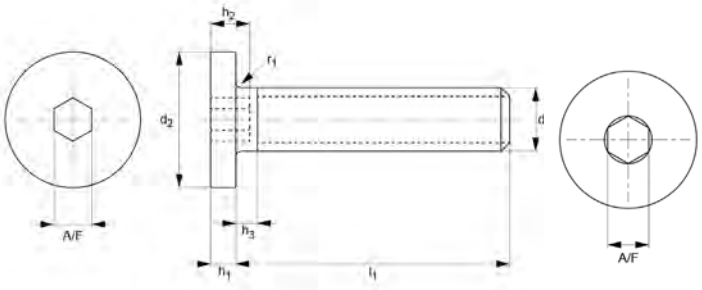

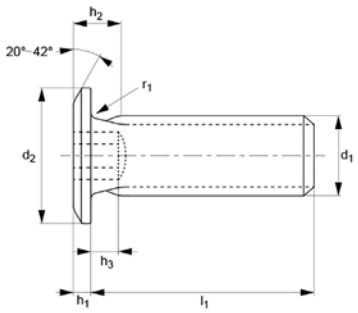



Part Number	Drive Type	l_1	h1	d_1	d_2	r_1	Material
20205096	Hex Drive	10.0	0.5	M2	4.0	0.10	316 Stainless Steel
20205461	Hex Drive	10.0	0.5	M2	4.0	0.10	Blackened Stainless 303
20205836	Hex Drive	10.0	0.5	M2	4.0	0.10	Blackened Stainless 316
20202569	Torx Drive	3.0	0.5	M2	4.0	0.3	303 Stainless Steel
20206154	Torx Drive	3.0	0.5	M2	4.0	0.3	316 Stainless Steel
20206598	Torx Drive	3.0	0.5	M2	4.0	0.3	Blackened Stainless 303
20207038	Torx Drive	3.0	0.5	M2	4.0	0.3	Blackened Stainless 316
20202576	Torx Drive	4.0	0.5	M2	4.0	0.3	303 Stainless Steel
20206161	Torx Drive	4.0	0.5	M2	4.0	0.3	316 Stainless Steel
20206604	Torx Drive	4.0	0.5	M2	4.0	0.3	Blackened Stainless 303
20207045	Torx Drive	4.0	0.5	M2	4.0	0.3	Blackened Stainless 316
20202583	Torx Drive	5.0	0.5	M2	4.0	0.3	303 Stainless Steel
20206178	Torx Drive	5.0	0.5	M2	4.0	0.3	316 Stainless Steel
20206611	Torx Drive	5.0	0.5	M2	4.0	0.3	Blackened Stainless 303
20207052	Torx Drive	5.0	0.5	M2	4.0	0.3	Blackened Stainless 316
20202590	Torx Drive	6.0	0.5	M2	4.0	0.3	303 Stainless Steel
20206185	Torx Drive	6.0	0.5	M2	4.0	0.3	316 Stainless Steel
20206628	Torx Drive	6.0	0.5	M2	4.0	0.3	Blackened Stainless 303
20207069	Torx Drive	6.0	0.5	M2	4.0	0.3	Blackened Stainless 316
20202606	Torx Drive	8.0	0.5	M2	4.0	0.3	303 Stainless Steel
20206192	Torx Drive	8.0	0.5	M2	4.0	0.3	316 Stainless Steel

Cap Screws - Low Head

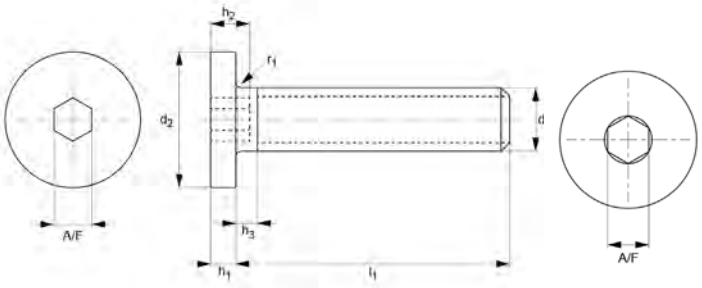

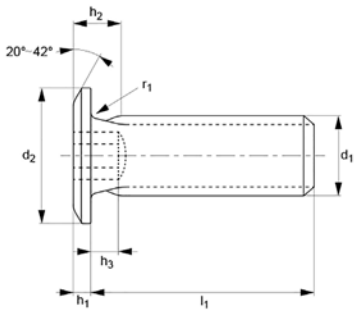



Part Number	Drive Type	l_1	h1	d_1	d_2	r_1	Material
20206635	Torx Drive	8.0	0.5	M2	4.0	0.3	Blackened Stainless 303
20207076	Torx Drive	8.0	0.5	M2	4.0	0.3	Blackened Stainless 316
20202613	Torx Drive	10.0	0.5	M2	4.0	0.3	303 Stainless Steel
20206208	Torx Drive	10.0	0.5	M2	4.0	0.3	316 Stainless Steel
20206642	Torx Drive	10.0	0.5	M2	4.0	0.3	Blackened Stainless 303
20207083	Torx Drive	10.0	0.5	M2	4.0	0.3	Blackened Stainless 316
20202620	Torx Drive	12.0	0.5	M2	4.0	0.3	303 Stainless Steel
20206215	Torx Drive	12.0	0.5	M2	4.0	0.3	316 Stainless Steel
20206659	Torx Drive	12.0	0.5	M2	4.0	0.3	Blackened Stainless 303
20207090	Torx Drive	12.0	0.5	M2	4.0	0.3	Blackened Stainless 316
20141523	Hex Drive	3.0	0.6	M2.5	5.0	0.1	303 Stainless Steel
20141530	Hex Drive	4.0	0.6	M2.5	5.0	0.1	303 Stainless Steel
20141547	Hex Drive	5.0	0.6	M2.5	5.0	0.1	303 Stainless Steel
20141554	Hex Drive	6.0	0.6	M2.5	5.0	0.1	303 Stainless Steel
20205102	Hex Drive	3.0	0.6	M2.5	5.0	0.10	316 Stainless Steel
20205478	Hex Drive	3.0	0.6	M2.5	5.0	0.10	Blackened Stainless 303
20205843	Hex Drive	3.0	0.6	M2.5	5.0	0.10	Blackened Stainless 316
20205119	Hex Drive	4.0	0.6	M2.5	5.0	0.10	316 Stainless Steel
20205485	Hex Drive	4.0	0.6	M2.5	5.0	0.10	Blackened Stainless 303
20205850	Hex Drive	4.0	0.6	M2.5	5.0	0.10	Blackened Stainless 316
20205126	Hex Drive	5.0	0.6	M2.5	5.0	0.10	316 Stainless Steel

Cap Screws - Low Head

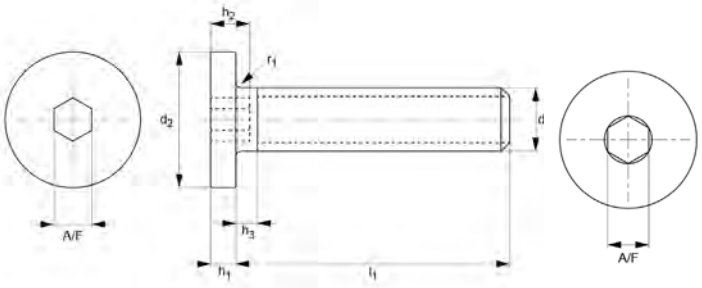

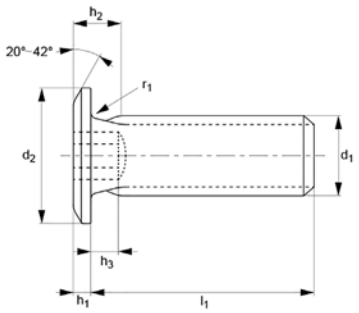



Part Number	Drive Type	l_1	h1	d_1	d_2	r_1	Material
20205492	Hex Drive	5.0	0.6	M2.5	5.0	0.10	Blackened Stainless 303
20205867	Hex Drive	5.0	0.6	M2.5	5.0	0.10	Blackened Stainless 316
20205133	Hex Drive	6.0	0.6	M2.5	5.0	0.10	316 Stainless Steel
20205508	Hex Drive	6.0	0.6	M2.5	5.0	0.10	Blackened Stainless 303
20205874	Hex Drive	6.0	0.6	M2.5	5.0	0.10	Blackened Stainless 316
20202637	Torx Drive	3.0	0.6	M2.5	6.0	0.3	303 Stainless Steel
20206222	Torx Drive	3.0	0.6	M2.5	6.0	0.3	316 Stainless Steel
20206666	Torx Drive	3.0	0.6	M2.5	6.0	0.3	Blackened Stainless 303
20207106	Torx Drive	3.0	0.6	M2.5	6.0	0.3	Blackened Stainless 316
20202644	Torx Drive	4.0	0.6	M2.5	6.0	0.3	303 Stainless Steel
20206239	Torx Drive	4.0	0.6	M2.5	6.0	0.3	316 Stainless Steel
20206673	Torx Drive	4.0	0.6	M2.5	6.0	0.3	Blackened Stainless 303
20207113	Torx Drive	4.0	0.6	M2.5	6.0	0.3	Blackened Stainless 316
20202651	Torx Drive	5.0	0.6	M2.5	6.0	0.3	303 Stainless Steel
20206246	Torx Drive	5.0	0.6	M2.5	6.0	0.3	316 Stainless Steel
20206680	Torx Drive	5.0	0.6	M2.5	6.0	0.3	Blackened Stainless 303
20207120	Torx Drive	5.0	0.6	M2.5	6.0	0.3	Blackened Stainless 316
20202668	Torx Drive	6.0	0.6	M2.5	6.0	0.3	303 Stainless Steel
20206253	Torx Drive	6.0	0.6	M2.5	6.0	0.3	316 Stainless Steel
20206697	Torx Drive	6.0	0.6	M2.5	6.0	0.3	Blackened Stainless 303
20207137	Torx Drive	6.0	0.6	M2.5	6.0	0.3	Blackened Stainless 316

Cap Screws - Low Head

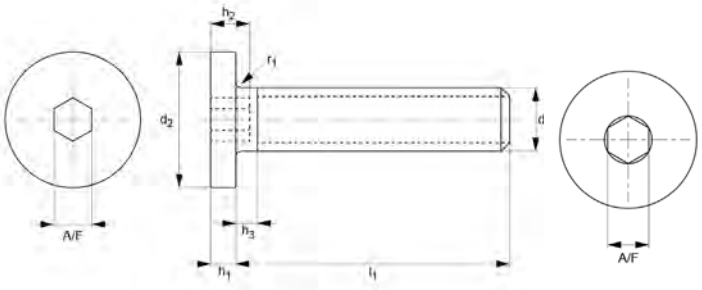

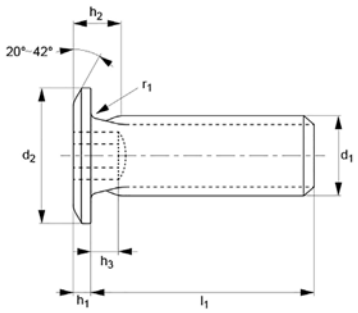



Part Number	Drive Type	l_1	h1	d_1	d_2	r_1	Material
20202675	Torx Drive	8.0	0.6	M2.5	6.0	0.3	303 Stainless Steel
20206260	Torx Drive	8.0	0.6	M2.5	6.0	0.3	316 Stainless Steel
20206703	Torx Drive	8.0	0.6	M2.5	6.0	0.3	Blackened Stainless 303
20207144	Torx Drive	8.0	0.6	M2.5	6.0	0.3	Blackened Stainless 316
20202682	Torx Drive	10.0	0.6	M2.5	6.0	0.3	303 Stainless Steel
20206277	Torx Drive	10.0	0.6	M2.5	6.0	0.3	316 Stainless Steel
20206710	Torx Drive	10.0	0.6	M2.5	6.0	0.3	Blackened Stainless 303
20207151	Torx Drive	10.0	0.6	M2.5	6.0	0.3	Blackened Stainless 316
20202699	Torx Drive	12.0	0.6	M2.5	6.0	0.3	303 Stainless Steel
20206284	Torx Drive	12.0	0.6	M2.5	6.0	0.3	316 Stainless Steel
20206727	Torx Drive	12.0	0.6	M2.5	6.0	0.3	Blackened Stainless 303
20207168	Torx Drive	12.0	0.6	M2.5	6.0	0.3	Blackened Stainless 316
20141561	Hex Drive	5.0	0.8	M3	6.0	0.1	303 Stainless Steel
20141578	Hex Drive	6.0	0.8	M3	6.0	0.1	303 Stainless Steel
20141585	Hex Drive	8.0	0.8	M3	6.0	0.1	303 Stainless Steel
20141592	Hex Drive	10.0	0.8	M3	6.0	0.1	303 Stainless Steel
20141608	Hex Drive	12.0	0.8	M3	6.0	0.1	303 Stainless Steel
20141615	Hex Drive	16.0	0.8	M3	6.0	0.1	303 Stainless Steel
20205140	Hex Drive	5.0	0.8	M3	6.0	0.10	316 Stainless Steel
20205515	Hex Drive	5.0	0.8	M3	6.0	0.10	Blackened Stainless 303
20205881	Hex Drive	5.0	0.8	M3	6.0	0.10	Blackened Stainless 316

Cap Screws - Low Head

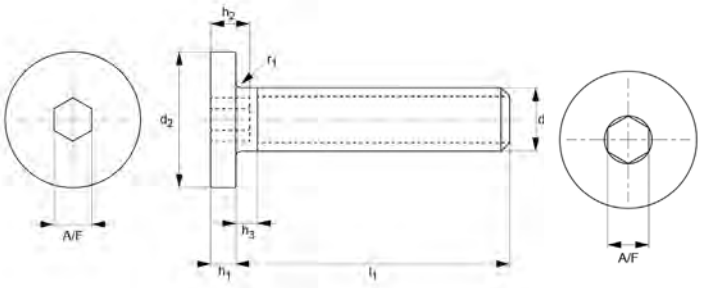

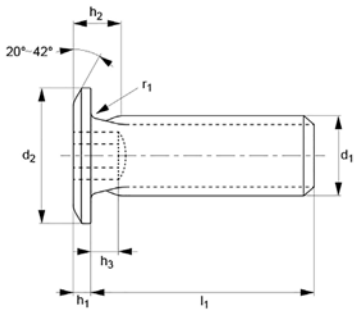



Part Number	Drive Type	l_1	h1	d_1	d_2	r_1	Material
20205157	Hex Drive	6.0	0.8	M3	6.0	0.10	316 Stainless Steel
20205522	Hex Drive	6.0	0.8	M3	6.0	0.10	Blackened Stainless 303
20205898	Hex Drive	6.0	0.8	M3	6.0	0.10	Blackened Stainless 316
20205164	Hex Drive	8.0	0.8	M3	6.0	0.10	316 Stainless Steel
20205539	Hex Drive	8.0	0.8	M3	6.0	0.10	Blackened Stainless 303
20205904	Hex Drive	8.0	0.8	M3	6.0	0.10	Blackened Stainless 316
20205171	Hex Drive	10.0	0.8	M3	6.0	0.10	316 Stainless Steel
20205546	Hex Drive	10.0	0.8	M3	6.0	0.10	Blackened Stainless 303
20205911	Hex Drive	10.0	0.8	M3	6.0	0.10	Blackened Stainless 316
20205188	Hex Drive	12.0	0.8	M3	6.0	0.10	316 Stainless Steel
20205553	Hex Drive	12.0	0.8	M3	6.0	0.10	Blackened Stainless 303
20205928	Hex Drive	12.0	0.8	M3	6.0	0.10	Blackened Stainless 316
20205195	Hex Drive	16.0	0.8	M3	6.0	0.10	316 Stainless Steel
20205560	Hex Drive	16.0	0.8	M3	6.0	0.10	Blackened Stainless 303
20205935	Hex Drive	16.0	0.8	M3	6.0	0.10	Blackened Stainless 316
20202705	Torx Drive	5.0	0.8	M3	7.0	0.4	303 Stainless Steel
20206291	Torx Drive	5.0	0.8	M3	7.0	0.4	316 Stainless Steel
20206734	Torx Drive	5.0	0.8	M3	7.0	0.4	Blackened Stainless 303
20207175	Torx Drive	5.0	0.8	M3	7.0	0.4	Blackened Stainless 316
20202712	Torx Drive	6.0	0.8	M3	7.0	0.4	303 Stainless Steel
20206307	Torx Drive	6.0	0.8	M3	7.0	0.4	316 Stainless Steel

Cap Screws - Low Head

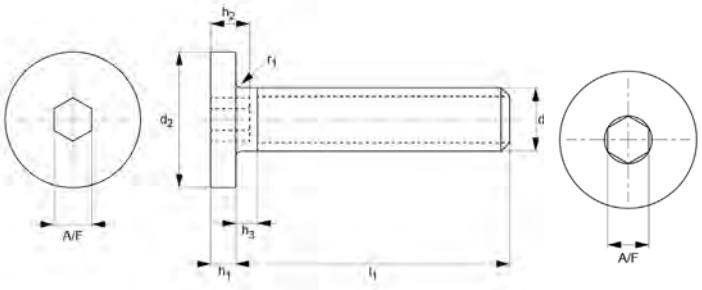

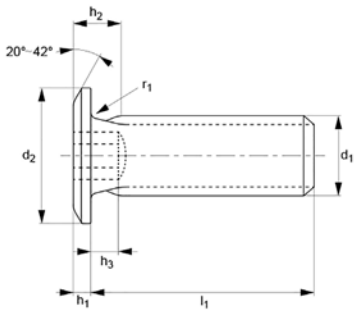



Part Number	Drive Type	l_1	h1	d_1	d_2	r_1	Material
20206741	Torx Drive	6.0	0.8	M3	7.0	0.4	Blackened Stainless 303
20207182	Torx Drive	6.0	0.8	M3	7.0	0.4	Blackened Stainless 316
20202729	Torx Drive	8.0	0.8	M3	7.0	0.4	303 Stainless Steel
20206314	Torx Drive	8.0	0.8	M3	7.0	0.4	316 Stainless Steel
20206758	Torx Drive	8.0	0.8	M3	7.0	0.4	Blackened Stainless 303
20207199	Torx Drive	8.0	0.8	M3	7.0	0.4	Blackened Stainless 316
20202736	Torx Drive	10.0	0.8	M3	7.0	0.4	303 Stainless Steel
20206321	Torx Drive	10.0	0.8	M3	7.0	0.4	316 Stainless Steel
20206765	Torx Drive	10.0	0.8	M3	7.0	0.4	Blackened Stainless 303
20207205	Torx Drive	10.0	0.8	M3	7.0	0.4	Blackened Stainless 316
20202743	Torx Drive	12.0	0.8	M3	7.0	0.4	303 Stainless Steel
20206338	Torx Drive	12.0	0.8	M3	7.0	0.4	316 Stainless Steel
20206772	Torx Drive	12.0	0.8	M3	7.0	0.4	Blackened Stainless 303
20207212	Torx Drive	12.0	0.8	M3	7.0	0.4	Blackened Stainless 316
20202750	Torx Drive	16.0	0.8	M3	7.0	0.4	303 Stainless Steel
20206345	Torx Drive	16.0	0.8	M3	7.0	0.4	316 Stainless Steel
20206789	Torx Drive	16.0	0.8	M3	7.0	0.4	Blackened Stainless 303
20207229	Torx Drive	16.0	0.8	M3	7.0	0.4	Blackened Stainless 316
20141622	Hex Drive	5.0	0.9	M4	8.0	0.2	303 Stainless Steel
20141639	Hex Drive	6.0	0.9	M4	8.0	0.2	303 Stainless Steel
20141646	Hex Drive	8.0	0.9	M4	8.0	0.2	303 Stainless Steel

Cap Screws - Low Head

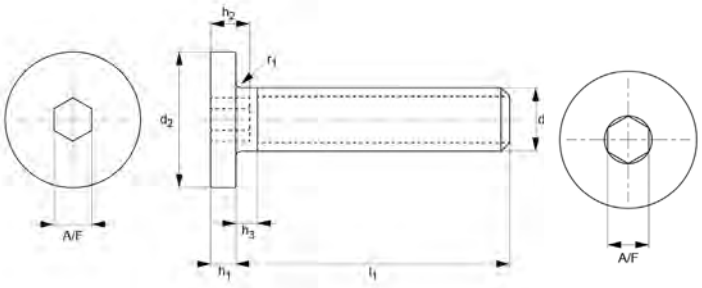

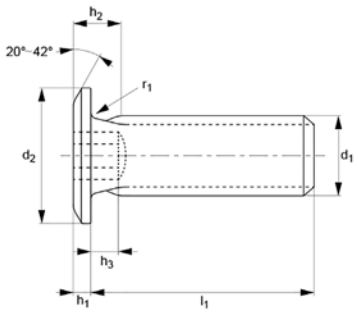



Part Number	Drive Type	l_1	h1	d_1	d_2	r_1	Material
20141653	Hex Drive	10.0	0.9	M4	8.0	0.2	303 Stainless Steel
20141660	Hex Drive	12.0	0.9	M4	8.0	0.2	303 Stainless Steel
20141677	Hex Drive	16.0	0.9	M4	8.0	0.2	303 Stainless Steel
20141684	Hex Drive	20.0	0.9	M4	8.0	0.2	303 Stainless Steel
20141691	Hex Drive	25.0	0.9	M4	8.0	0.2	303 Stainless Steel
20205201	Hex Drive	5.0	0.9	M4	8.0	0.20	316 Stainless Steel
20205577	Hex Drive	5.0	0.9	M4	8.0	0.20	Blackened Stainless 303
20205942	Hex Drive	5.0	0.9	M4	8.0	0.20	Blackened Stainless 316
20205218	Hex Drive	6.0	0.9	M4	8.0	0.20	316 Stainless Steel
20205584	Hex Drive	6.0	0.9	M4	8.0	0.20	Blackened Stainless 303
20205959	Hex Drive	6.0	0.9	M4	8.0	0.20	Blackened Stainless 316
20205225	Hex Drive	8.0	0.9	M4	8.0	0.20	316 Stainless Steel
20205591	Hex Drive	8.0	0.9	M4	8.0	0.20	Blackened Stainless 303
20205966	Hex Drive	8.0	0.9	M4	8.0	0.20	Blackened Stainless 316
20205232	Hex Drive	10.0	0.9	M4	8.0	0.20	316 Stainless Steel
20205607	Hex Drive	10.0	0.9	M4	8.0	0.20	Blackened Stainless 303
20205973	Hex Drive	10.0	0.9	M4	8.0	0.20	Blackened Stainless 316
20205249	Hex Drive	12.0	0.9	M4	8.0	0.20	316 Stainless Steel
20205614	Hex Drive	12.0	0.9	M4	8.0	0.20	Blackened Stainless 303
20205980	Hex Drive	12.0	0.9	M4	8.0	0.20	Blackened Stainless 316
20205256	Hex Drive	16.0	0.9	M4	8.0	0.20	316 Stainless Steel

Cap Screws - Low Head

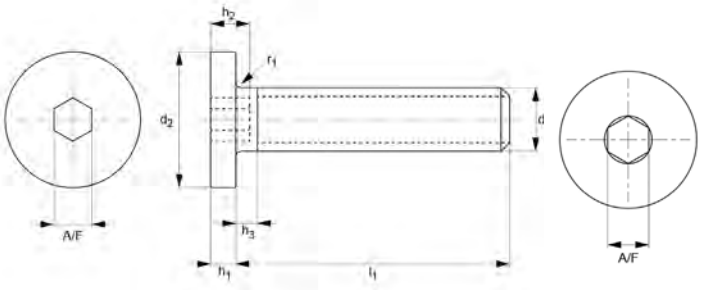

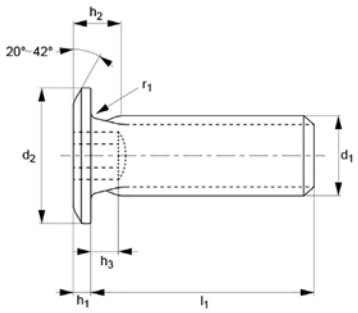



Part Number	Drive Type	l_1	h1	d_1	d_2	r_1	Material
20205621	Hex Drive	16.0	0.9	M4	8.0	0.20	Blackened Stainless 303
20205997	Hex Drive	16.0	0.9	M4	8.0	0.20	Blackened Stainless 316
20205263	Hex Drive	20.0	0.9	M4	8.0	0.20	316 Stainless Steel
20205638	Hex Drive	20.0	0.9	M4	8.0	0.20	Blackened Stainless 303
20206000	Hex Drive	20.0	0.9	M4	8.0	0.20	Blackened Stainless 316
20205270	Hex Drive	25.0	0.9	M4	8.0	0.20	316 Stainless Steel
20205645	Hex Drive	25.0	0.9	M4	8.0	0.20	Blackened Stainless 303
20206017	Hex Drive	25.0	0.9	M4	8.0	0.20	Blackened Stainless 316
20202767	Torx Drive	6.0	0.9	M4	8.0	0.5	303 Stainless Steel
20206352	Torx Drive	6.0	0.9	M4	8.0	0.5	316 Stainless Steel
20206796	Torx Drive	6.0	0.9	M4	8.0	0.5	Blackened Stainless 303
20207236	Torx Drive	6.0	0.9	M4	8.0	0.5	Blackened Stainless 316
20202774	Torx Drive	8.0	0.9	M4	8.0	0.5	303 Stainless Steel
20206369	Torx Drive	8.0	0.9	M4	8.0	0.5	316 Stainless Steel
20206802	Torx Drive	8.0	0.9	M4	8.0	0.5	Blackened Stainless 303
20207243	Torx Drive	8.0	0.9	M4	8.0	0.5	Blackened Stainless 316
20202781	Torx Drive	10.0	0.9	M4	8.0	0.5	303 Stainless Steel
20206376	Torx Drive	10.0	0.9	M4	8.0	0.5	316 Stainless Steel
20206819	Torx Drive	10.0	0.9	M4	8.0	0.5	Blackened Stainless 303
20207250	Torx Drive	10.0	0.9	M4	8.0	0.5	Blackened Stainless 316
20202798	Torx Drive	12.0	0.9	M4	8.0	0.5	303 Stainless Steel

Cap Screws - Low Head

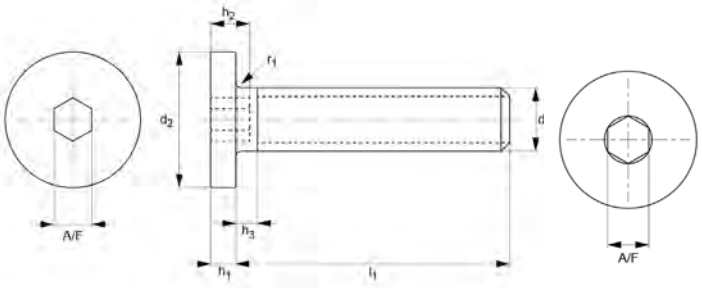

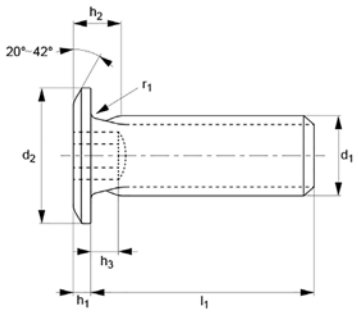



Part Number	Drive Type	l_1	h1	d_1	d_2	r_1	Material
20206383	Torx Drive	12.0	0.9	M4	8.0	0.5	316 Stainless Steel
20206826	Torx Drive	12.0	0.9	M4	8.0	0.5	Blackened Stainless 303
20207267	Torx Drive	12.0	0.9	M4	8.0	0.5	Blackened Stainless 316
20202804	Torx Drive	16.0	0.9	M4	8.0	0.5	303 Stainless Steel
20206390	Torx Drive	16.0	0.9	M4	8.0	0.5	316 Stainless Steel
20206833	Torx Drive	16.0	0.9	M4	8.0	0.5	Blackened Stainless 303
20207274	Torx Drive	16.0	0.9	M4	8.0	0.5	Blackened Stainless 316
20202811	Torx Drive	20.0	0.9	M4	8.0	0.5	303 Stainless Steel
20206406	Torx Drive	20.0	0.9	M4	8.0	0.5	316 Stainless Steel
20206840	Torx Drive	20.0	0.9	M4	8.0	0.5	Blackened Stainless 303
20207281	Torx Drive	20.0	0.9	M4	8.0	0.5	Blackened Stainless 316
20202828	Torx Drive	25.0	0.9	M4	8.0	0.5	303 Stainless Steel
20206413	Torx Drive	25.0	0.9	M4	8.0	0.5	316 Stainless Steel
20206857	Torx Drive	25.0	0.9	M4	8.0	0.5	Blackened Stainless 303
20207298	Torx Drive	25.0	0.9	M4	8.0	0.5	Blackened Stainless 316
20141707	Hex Drive	6.0	1.0	M5	9.0	0.2	303 Stainless Steel
20141714	Hex Drive	8.0	1.0	M5	9.0	0.2	303 Stainless Steel
20141721	Hex Drive	10.0	1.0	M5	9.0	0.2	303 Stainless Steel
20141738	Hex Drive	12.0	1.0	M5	9.0	0.2	303 Stainless Steel
20141745	Hex Drive	16.0	1.0	M5	9.0	0.2	303 Stainless Steel
20141752	Hex Drive	20.0	1.0	M5	9.0	0.2	303 Stainless Steel

Cap Screws - Low Head

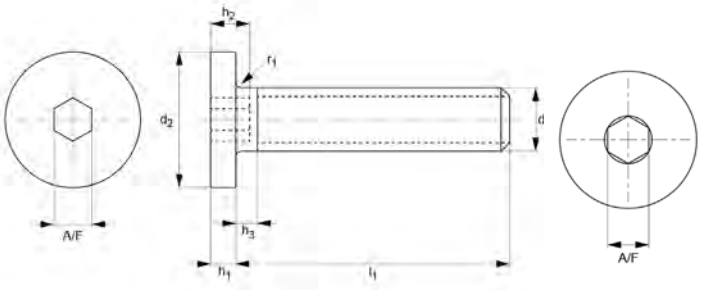

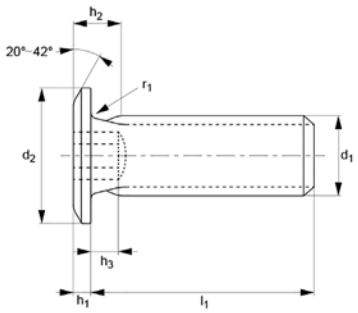



Part Number	Drive Type	l_1	h1	d_1	d_2	r_1	Material
20141769	Hex Drive	25.0	1.0	M5	9.0	0.2	303 Stainless Steel
20205287	Hex Drive	6.0	1.0	M5	9.0	0.20	316 Stainless Steel
20205652	Hex Drive	6.0	1.0	M5	9.0	0.20	Blackened Stainless 303
20206024	Hex Drive	6.0	1.0	M5	9.0	0.20	Blackened Stainless 316
20205294	Hex Drive	8.0	1.0	M5	9.0	0.20	316 Stainless Steel
20205669	Hex Drive	8.0	1.0	M5	9.0	0.20	Blackened Stainless 303
20206031	Hex Drive	8.0	1.0	M5	9.0	0.20	Blackened Stainless 316
20205300	Hex Drive	10.0	1.0	M5	9.0	0.20	316 Stainless Steel
20205676	Hex Drive	10.0	1.0	M5	9.0	0.20	Blackened Stainless 303
20206048	Hex Drive	10.0	1.0	M5	9.0	0.20	Blackened Stainless 316
20205317	Hex Drive	12.0	1.0	M5	9.0	0.20	316 Stainless Steel
20205683	Hex Drive	12.0	1.0	M5	9.0	0.20	Blackened Stainless 303
20206055	Hex Drive	12.0	1.0	M5	9.0	0.20	Blackened Stainless 316
20205324	Hex Drive	16.0	1.0	M5	9.0	0.20	316 Stainless Steel
20205690	Hex Drive	16.0	1.0	M5	9.0	0.20	Blackened Stainless 303
20206062	Hex Drive	16.0	1.0	M5	9.0	0.20	Blackened Stainless 316
20205331	Hex Drive	20.0	1.0	M5	9.0	0.20	316 Stainless Steel
20205706	Hex Drive	20.0	1.0	M5	9.0	0.20	Blackened Stainless 303
20206079	Hex Drive	20.0	1.0	M5	9.0	0.20	Blackened Stainless 316
20205348	Hex Drive	25.0	1.0	M5	9.0	0.20	316 Stainless Steel
20205713	Hex Drive	25.0	1.0	M5	9.0	0.20	Blackened Stainless 303

Cap Screws - Low Head

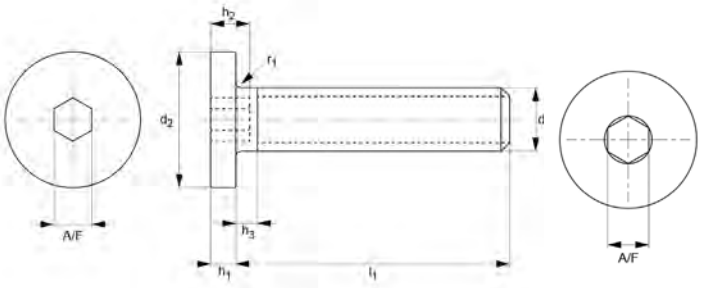

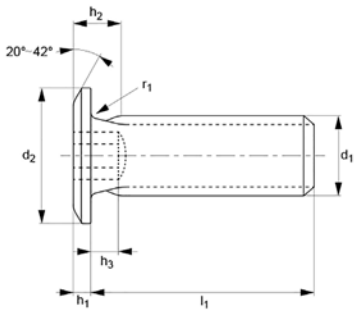



Part Number	Drive Type	l_1	h1	d_1	d_2	r_1	Material
20206086	Hex Drive	25.0	1.0	M5	9.0	0.20	Blackened Stainless 316
20202835	Torx Drive	8.0	1.0	M5	9.0	0.6	303 Stainless Steel
20206420	Torx Drive	8.0	1.0	M5	9.0	0.6	316 Stainless Steel
20206864	Torx Drive	8.0	1.0	M5	9.0	0.6	Blackened Stainless 303
20207304	Torx Drive	8.0	1.0	M5	9.0	0.6	Blackened Stainless 316
20202842	Torx Drive	10.0	1.0	M5	9.0	0.6	303 Stainless Steel
20206437	Torx Drive	10.0	1.0	M5	9.0	0.6	316 Stainless Steel
20206871	Torx Drive	10.0	1.0	M5	9.0	0.6	Blackened Stainless 303
20207311	Torx Drive	10.0	1.0	M5	9.0	0.6	Blackened Stainless 316
20202859	Torx Drive	12.0	1.0	M5	9.0	0.6	303 Stainless Steel
20206444	Torx Drive	12.0	1.0	M5	9.0	0.6	316 Stainless Steel
20206888	Torx Drive	12.0	1.0	M5	9.0	0.6	Blackened Stainless 303
20207328	Torx Drive	12.0	1.0	M5	9.0	0.6	Blackened Stainless 316
20202866	Torx Drive	16.0	1.0	M5	9.0	0.6	303 Stainless Steel
20206451	Torx Drive	16.0	1.0	M5	9.0	0.6	316 Stainless Steel
20206895	Torx Drive	16.0	1.0	M5	9.0	0.6	Blackened Stainless 303
20207335	Torx Drive	16.0	1.0	M5	9.0	0.6	Blackened Stainless 316
20202873	Torx Drive	20.0	1.0	M5	9.0	0.6	303 Stainless Steel
20206468	Torx Drive	20.0	1.0	M5	9.0	0.6	316 Stainless Steel
20206901	Torx Drive	20.0	1.0	M5	9.0	0.6	Blackened Stainless 303
20207342	Torx Drive	20.0	1.0	M5	9.0	0.6	Blackened Stainless 316

Cap Screws - Low Head

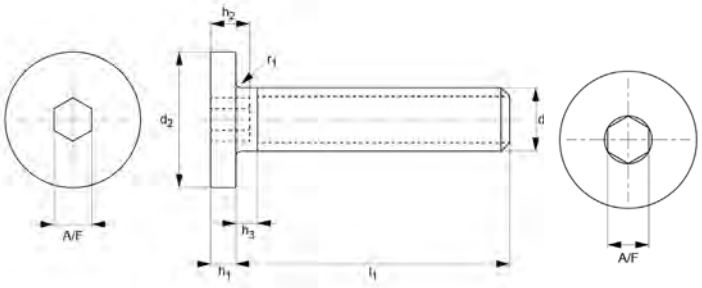

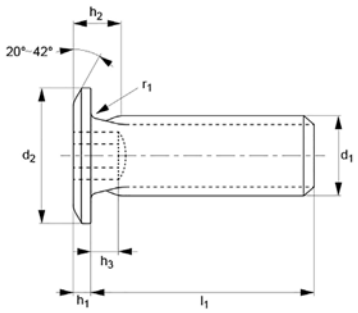



Part Number	Drive Type	l_1	h1	d_1	d_2	r_1	Material
20202880	Torx Drive	25.0	1.0	M5	9.0	0.6	303 Stainless Steel
20206475	Torx Drive	25.0	1.0	M5	9.0	0.6	316 Stainless Steel
20206918	Torx Drive	25.0	1.0	M5	9.0	0.6	Blackened Stainless 303
20207359	Torx Drive	25.0	1.0	M5	9.0	0.6	Blackened Stainless 316
20202897	Torx Drive	30.0	1.0	M5	9.0	0.6	303 Stainless Steel
20206482	Torx Drive	30.0	1.0	M5	9.0	0.6	316 Stainless Steel
20206925	Torx Drive	30.0	1.0	M5	9.0	0.6	Blackened Stainless 303
20207366	Torx Drive	30.0	1.0	M5	9.0	0.6	Blackened Stainless 316
20202996	Torx Drive	35.0	1.0	M5	9.0	0.6	303 Stainless Steel
20206499	Torx Drive	35.0	1.0	M5	9.0	0.6	316 Stainless Steel
20206932	Torx Drive	35.0	1.0	M5	9.0	0.6	Blackened Stainless 303
20207373	Torx Drive	35.0	1.0	M5	9.0	0.6	Blackened Stainless 316
20141776	Hex Drive	8.0	1.2	M6	10.0	0.25	303 Stainless Steel
20141783	Hex Drive	10.0	1.2	M6	10.0	0.25	303 Stainless Steel
20141790	Hex Drive	12.0	1.2	M6	10.0	0.25	303 Stainless Steel
20141806	Hex Drive	16.0	1.2	M6	10.0	0.25	303 Stainless Steel
20141813	Hex Drive	20.0	1.2	M6	10.0	0.25	303 Stainless Steel
20141820	Hex Drive	25.0	1.2	M6	10.0	0.25	303 Stainless Steel
20205355	Hex Drive	8.0	1.2	M6	10.0	0.25	316 Stainless Steel
20205720	Hex Drive	8.0	1.2	M6	10.0	0.25	Blackened Stainless 303
20206093	Hex Drive	8.0	1.2	M6	10.0	0.25	Blackened Stainless 316

Cap Screws - Low Head

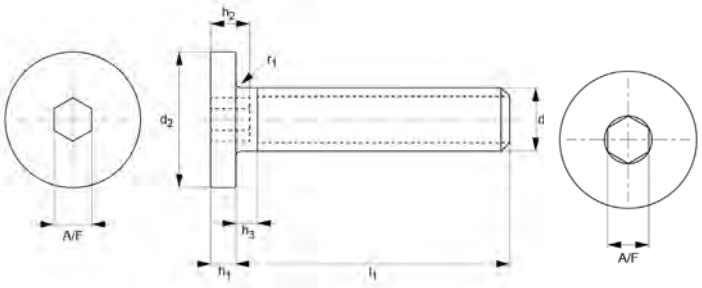

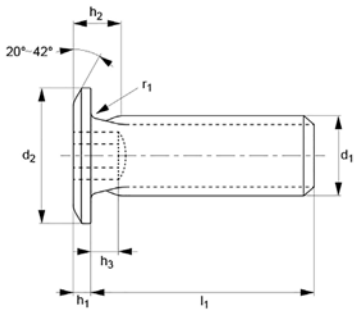



Part Number	Drive Type	l_1	h1	d_1	d_2	r_1	Material
20205362	Hex Drive	10.0	1.2	M6	10.0	0.25	316 Stainless Steel
20205737	Hex Drive	10.0	1.2	M6	10.0	0.25	Blackened Stainless 303
20206109	Hex Drive	10.0	1.2	M6	10.0	0.25	Blackened Stainless 316
20205379	Hex Drive	12.0	1.2	M6	10.0	0.25	316 Stainless Steel
20205744	Hex Drive	12.0	1.2	M6	10.0	0.25	Blackened Stainless 303
20206116	Hex Drive	12.0	1.2	M6	10.0	0.25	Blackened Stainless 316
20205386	Hex Drive	16.0	1.2	M6	10.0	0.25	316 Stainless Steel
20205751	Hex Drive	16.0	1.2	M6	10.0	0.25	Blackened Stainless 303
20206123	Hex Drive	16.0	1.2	M6	10.0	0.25	Blackened Stainless 316
20205393	Hex Drive	20.0	1.2	M6	10.0	0.25	316 Stainless Steel
20205768	Hex Drive	20.0	1.2	M6	10.0	0.25	Blackened Stainless 303
20206130	Hex Drive	20.0	1.2	M6	10.0	0.25	Blackened Stainless 316
20205409	Hex Drive	25.0	1.2	M6	10.0	0.25	316 Stainless Steel
20205775	Hex Drive	25.0	1.2	M6	10.0	0.25	Blackened Stainless 303
20206147	Hex Drive	25.0	1.2	M6	10.0	0.25	Blackened Stainless 316
20202903	Torx Drive	8.0	1.2	M6	12.0	0.7	303 Stainless Steel
20206505	Torx Drive	8.0	1.2	M6	12.0	0.7	316 Stainless Steel
20206949	Torx Drive	8.0	1.2	M6	12.0	0.7	Blackened Stainless 303
20207380	Torx Drive	8.0	1.2	M6	12.0	0.7	Blackened Stainless 316
20202910	Torx Drive	10.0	1.2	M6	12.0	0.7	303 Stainless Steel
20206512	Torx Drive	10.0	1.2	M6	12.0	0.7	316 Stainless Steel

Cap Screws - Low Head

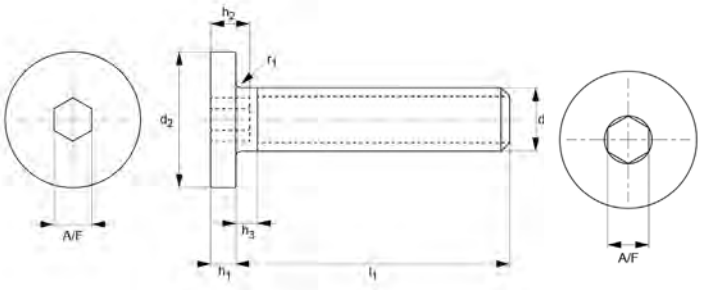

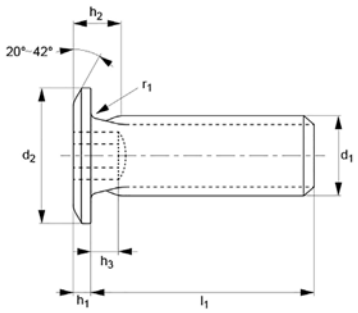



Part Number	Drive Type	l_1	h1	d_1	d_2	r_1	Material
20206956	Torx Drive	10.0	1.2	M6	12.0	0.7	Blackened Stainless 303
20207397	Torx Drive	10.0	1.2	M6	12.0	0.7	Blackened Stainless 316
20202927	Torx Drive	12.0	1.2	M6	12.0	0.7	303 Stainless Steel
20206529	Torx Drive	12.0	1.2	M6	12.0	0.7	316 Stainless Steel
20206963	Torx Drive	12.0	1.2	M6	12.0	0.7	Blackened Stainless 303
20207403	Torx Drive	12.0	1.2	M6	12.0	0.7	Blackened Stainless 316
20202934	Torx Drive	16.0	1.2	M6	12.0	0.7	303 Stainless Steel
20206536	Torx Drive	16.0	1.2	M6	12.0	0.7	316 Stainless Steel
20206970	Torx Drive	16.0	1.2	M6	12.0	0.7	Blackened Stainless 303
20207410	Torx Drive	16.0	1.2	M6	12.0	0.7	Blackened Stainless 316
20202941	Torx Drive	20.0	1.2	M6	12.0	0.7	303 Stainless Steel
20206543	Torx Drive	20.0	1.2	M6	12.0	0.7	316 Stainless Steel
20206987	Torx Drive	20.0	1.2	M6	12.0	0.7	Blackened Stainless 303
20207427	Torx Drive	20.0	1.2	M6	12.0	0.7	Blackened Stainless 316
20202958	Torx Drive	25.0	1.2	M6	12.0	0.7	303 Stainless Steel
20206550	Torx Drive	25.0	1.2	M6	12.0	0.7	316 Stainless Steel
20206994	Torx Drive	25.0	1.2	M6	12.0	0.7	Blackened Stainless 303
20207434	Torx Drive	25.0	1.2	M6	12.0	0.7	Blackened Stainless 316
20202965	Torx Drive	30.0	1.2	M6	12.0	0.7	303 Stainless Steel
20206567	Torx Drive	30.0	1.2	M6	12.0	0.7	316 Stainless Steel
20207007	Torx Drive	30.0	1.2	M6	12.0	0.7	Blackened Stainless 303

Cap Screws - Low Head

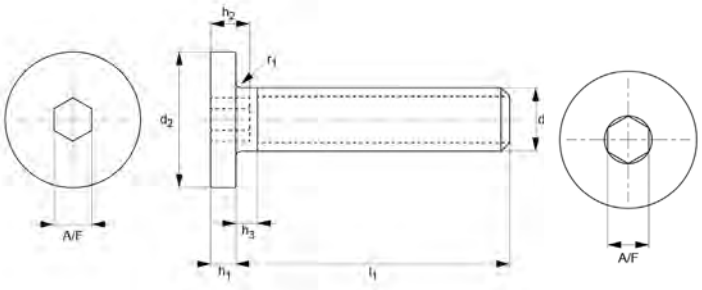

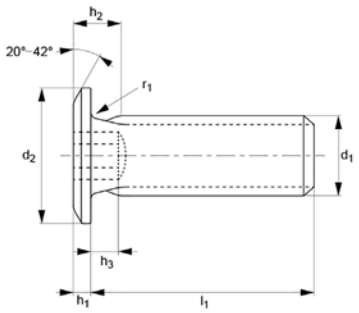



Part Number	Drive Type	l_1	h1	d_1	d_2	r_1	Material
20207441	Torx Drive	30.0	1.2	M6	12.0	0.7	Blackened Stainless 316
20202972	Torx Drive	35.0	1.2	M6	12.0	0.7	303 Stainless Steel
20206574	Torx Drive	35.0	1.2	M6	12.0	0.7	316 Stainless Steel
20207014	Torx Drive	35.0	1.2	M6	12.0	0.7	Blackened Stainless 303
20207458	Torx Drive	35.0	1.2	M6	12.0	0.7	Blackened Stainless 316
20202989	Torx Drive	40.0	1.2	M6	12.0	0.7	303 Stainless Steel
20206581	Torx Drive	40.0	1.2	M6	12.0	0.7	316 Stainless Steel
20207021	Torx Drive	40.0	1.2	M6	12.0	0.7	Blackened Stainless 303
20207465	Torx Drive	40.0	1.2	M6	12.0	0.7	Blackened Stainless 316
20140786	Hex Drive	3.0	1.5	M2	4.0	0.1	303 Stainless Steel
20140793	Hex Drive	4.0	1.5	M2	4.0	0.1	303 Stainless Steel
20140809	Hex Drive	5.0	1.5	M2	4.0	0.1	303 Stainless Steel
20140816	Hex Drive	6.0	1.5	M2	4.0	0.1	303 Stainless Steel
20140823	Hex Drive	8.0	1.5	M2	4.0	0.1	303 Stainless Steel
20140830	Hex Drive	10.0	1.5	M2	4.0	0.1	303 Stainless Steel
20140847	Hex Drive	12.0	1.5	M2	4.0	0.1	303 Stainless Steel
20140854	Hex Drive	3.0	1.5	M2.5	5.0	0.1	303 Stainless Steel
20140861	Hex Drive	4.0	1.5	M2.5	5.0	0.1	303 Stainless Steel
20140878	Hex Drive	5.0	1.5	M2.5	5.0	0.1	303 Stainless Steel
20140885	Hex Drive	6.0	1.5	M2.5	5.0	0.1	303 Stainless Steel
20140892	Hex Drive	8.0	1.5	M2.5	5.0	0.1	303 Stainless Steel

Cap Screws - Low Head

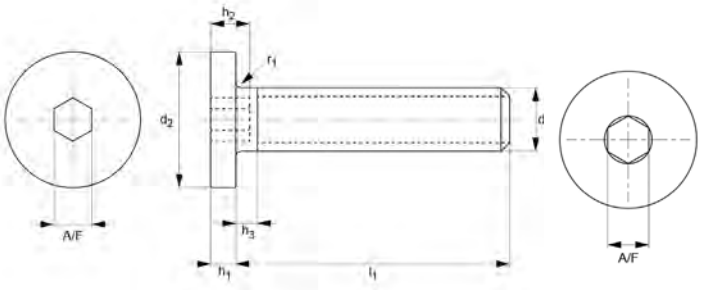

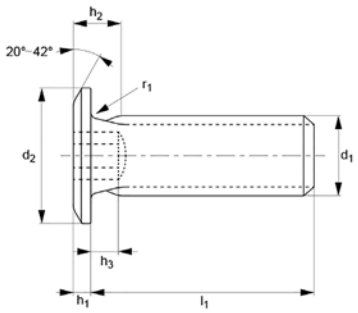



Part Number	Drive Type	l_1	h1	d_1	d_2	r_1	Material
20140908	Hex Drive	10.0	1.5	M2.5	5.0	0.1	303 Stainless Steel
20140915	Hex Drive	12.0	1.5	M2.5	5.0	0.1	303 Stainless Steel
20140922	Hex Drive	4.0	1.5	M3	6.0	0.1	303 Stainless Steel
20140939	Hex Drive	5.0	1.5	M3	6.0	0.1	303 Stainless Steel
20140946	Hex Drive	6.0	1.5	M3	6.0	0.1	303 Stainless Steel
20140953	Hex Drive	8.0	1.5	M3	6.0	0.1	303 Stainless Steel
20140960	Hex Drive	10.0	1.5	M3	6.0	0.1	303 Stainless Steel
20140977	Hex Drive	12.0	1.5	M3	6.0	0.1	303 Stainless Steel
20140984	Hex Drive	14.0	1.5	M3	6.0	0.1	303 Stainless Steel
20140991	Hex Drive	16.0	1.5	M3	6.0	0.1	303 Stainless Steel
20141004	Hex Drive	5.0	1.5	M4	8.0	0.2	303 Stainless Steel
20141011	Hex Drive	6.0	1.5	M4	8.0	0.2	303 Stainless Steel
20141028	Hex Drive	8.0	1.5	M4	8.0	0.2	303 Stainless Steel
20141035	Hex Drive	10.0	1.5	M4	8.0	0.2	303 Stainless Steel
20141042	Hex Drive	12.0	1.5	M4	8.0	0.2	303 Stainless Steel
20141059	Hex Drive	14.0	1.5	M4	8.0	0.2	303 Stainless Steel
20141066	Hex Drive	16.0	1.5	M4	8.0	0.2	303 Stainless Steel
20141073	Hex Drive	18.0	1.5	M4	8.0	0.2	303 Stainless Steel
20141080	Hex Drive	20.0	1.5	M4	8.0	0.2	303 Stainless Steel
20141097	Hex Drive	6.0	1.5	M5	9.0	0.2	303 Stainless Steel
20141103	Hex Drive	8.0	1.5	M5	9.0	0.2	303 Stainless Steel

Cap Screws - Low Head

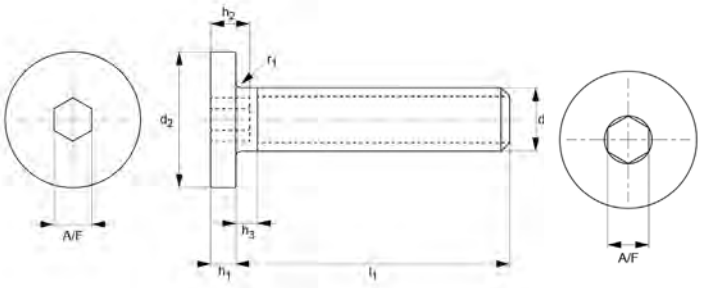

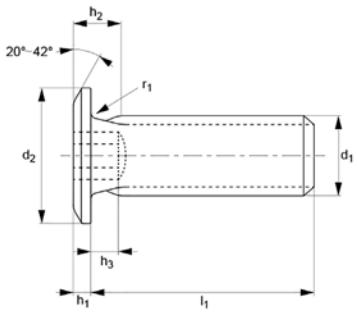



Part Number	Drive Type	l_1	h1	d_1	d_2	r_1	Material
20141110	Hex Drive	10.0	1.5	M5	9.0	0.2	303 Stainless Steel
20141127	Hex Drive	12.0	1.5	M5	9.0	0.2	303 Stainless Steel
20141134	Hex Drive	14.0	1.5	M5	9.0	0.2	303 Stainless Steel
20141141	Hex Drive	16.0	1.5	M5	9.0	0.2	303 Stainless Steel
20141158	Hex Drive	18.0	1.5	M5	9.0	0.2	303 Stainless Steel
20141165	Hex Drive	20.0	1.5	M5	9.0	0.2	303 Stainless Steel
20141172	Hex Drive	25.0	1.5	M5	9.0	0.2	303 Stainless Steel
20141189	Hex Drive	6.0	1.5	M6	10.0	0.25	303 Stainless Steel
20141196	Hex Drive	8.0	1.5	M6	10.0	0.25	303 Stainless Steel
20141202	Hex Drive	10.0	1.5	M6	10.0	0.25	303 Stainless Steel
20141219	Hex Drive	12.0	1.5	M6	10.0	0.25	303 Stainless Steel
20141226	Hex Drive	14.0	1.5	M6	10.0	0.25	303 Stainless Steel
20141233	Hex Drive	16.0	1.5	M6	10.0	0.25	303 Stainless Steel
20141240	Hex Drive	18.0	1.5	M6	10.0	0.25	303 Stainless Steel
20141257	Hex Drive	20.0	1.5	M6	10.0	0.25	303 Stainless Steel
20141264	Hex Drive	25.0	1.5	M6	10.0	0.25	303 Stainless Steel
20141271	Hex Drive	30.0	1.5	M6	10.0	0.25	303 Stainless Steel
20141288	Hex Drive	6.0	1.5	M8	13.0	0.4	303 Stainless Steel
20141295	Hex Drive	8.0	1.5	M8	13.0	0.4	303 Stainless Steel
20141301	Hex Drive	10.0	1.5	M8	13.0	0.4	303 Stainless Steel
20141318	Hex Drive	12.0	1.5	M8	13.0	0.4	303 Stainless Steel

Cap Screws - Low Head

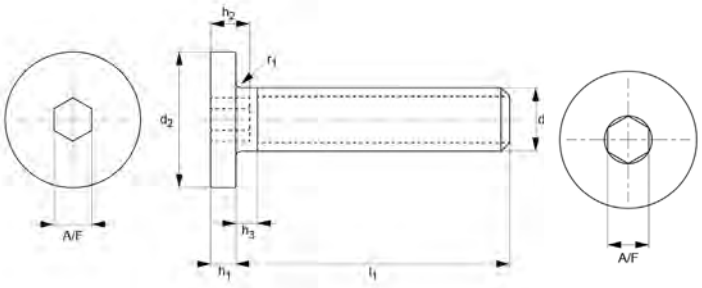

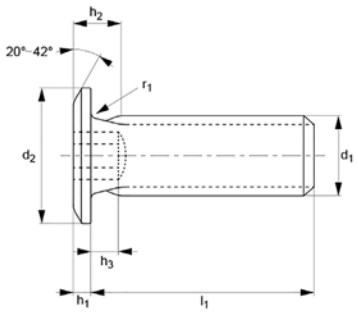



Part Number	Drive Type	l_1	h1	d_1	d_2	r_1	Material
20141325	Hex Drive	14.0	1.5	M8	13.0	0.4	303 Stainless Steel
20141332	Hex Drive	16.0	1.5	M8	13.0	0.4	303 Stainless Steel
20141349	Hex Drive	18.0	1.5	M8	13.0	0.4	303 Stainless Steel
20141356	Hex Drive	20.0	1.5	M8	13.0	0.4	303 Stainless Steel
20141363	Hex Drive	25.0	1.5	M8	13.0	0.4	303 Stainless Steel
20141370	Hex Drive	30.0	1.5	M8	13.0	0.4	303 Stainless Steel
20141387	Hex Drive	10.0	1.5	M10	16.0	0.4	303 Stainless Steel
20141394	Hex Drive	12.0	1.5	M10	16.0	0.4	303 Stainless Steel
20141400	Hex Drive	14.0	1.5	M10	16.0	0.4	303 Stainless Steel
20141417	Hex Drive	16.0	1.5	M10	16.0	0.4	303 Stainless Steel
20141424	Hex Drive	18.0	1.5	M10	16.0	0.4	303 Stainless Steel
20141431	Hex Drive	20.0	1.5	M10	16.0	0.4	303 Stainless Steel
20141448	Hex Drive	25.0	1.5	M10	16.0	0.4	303 Stainless Steel
20141455	Hex Drive	30.0	1.5	M10	16.0	0.4	303 Stainless Steel
20203009	Hex Drive	3.0	1.5	M2	4.0	0.10	316 Stainless Steel
20203689	Hex Drive	3.0	1.5	M2	4.0	0.10	Blackened Stainless 303
20204365	Hex Drive	3.0	1.5	M2	4.0	0.10	Blackened Stainless 316
20203016	Hex Drive	4.0	1.5	M2	4.0	0.10	316 Stainless Steel
20203696	Hex Drive	4.0	1.5	M2	4.0	0.10	Blackened Stainless 303
20204372	Hex Drive	4.0	1.5	M2	4.0	0.10	Blackened Stainless 316
20203023	Hex Drive	5.0	1.5	M2	4.0	0.10	316 Stainless Steel

Cap Screws - Low Head

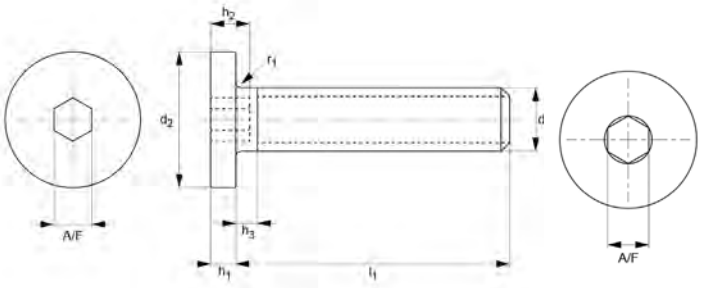

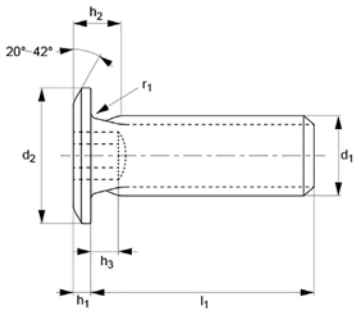



Part Number	Drive Type	l_1	h1	d_1	d_2	r_1	Material
20203702	Hex Drive	5.0	1.5	M2	4.0	0.10	Blackened Stainless 303
20204389	Hex Drive	5.0	1.5	M2	4.0	0.10	Blackened Stainless 316
20203030	Hex Drive	6.0	1.5	M2	4.0	0.10	316 Stainless Steel
20203719	Hex Drive	6.0	1.5	M2	4.0	0.10	Blackened Stainless 303
20204396	Hex Drive	6.0	1.5	M2	4.0	0.10	Blackened Stainless 316
20203047	Hex Drive	8.0	1.5	M2	4.0	0.10	316 Stainless Steel
20203726	Hex Drive	8.0	1.5	M2	4.0	0.10	Blackened Stainless 303
20204402	Hex Drive	8.0	1.5	M2	4.0	0.10	Blackened Stainless 316
20203054	Hex Drive	10.0	1.5	M2	4.0	0.10	316 Stainless Steel
20203733	Hex Drive	10.0	1.5	M2	4.0	0.10	Blackened Stainless 303
20204419	Hex Drive	10.0	1.5	M2	4.0	0.10	Blackened Stainless 316
20203061	Hex Drive	12.0	1.5	M2	4.0	0.10	316 Stainless Steel
20203740	Hex Drive	12.0	1.5	M2	4.0	0.10	Blackened Stainless 303
20204426	Hex Drive	12.0	1.5	M2	4.0	0.10	Blackened Stainless 316
20203078	Hex Drive	3.0	1.5	M2.5	5.0	0.10	316 Stainless Steel
20203757	Hex Drive	3.0	1.5	M2.5	5.0	0.10	Blackened Stainless 303
20204433	Hex Drive	3.0	1.5	M2.5	5.0	0.10	Blackened Stainless 316
20203085	Hex Drive	4.0	1.5	M2.5	5.0	0.10	316 Stainless Steel
20203764	Hex Drive	4.0	1.5	M2.5	5.0	0.10	Blackened Stainless 303
20204440	Hex Drive	4.0	1.5	M2.5	5.0	0.10	Blackened Stainless 316
20203092	Hex Drive	5.0	1.5	M2.5	5.0	0.10	316 Stainless Steel

Cap Screws - Low Head

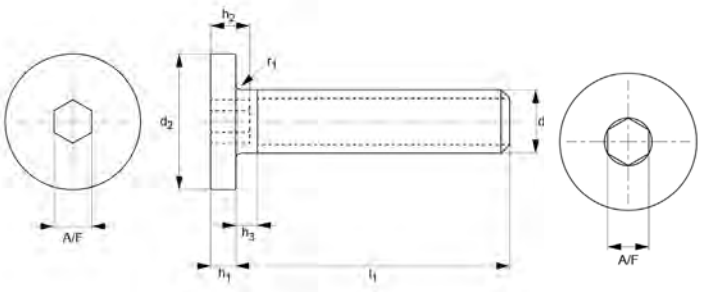

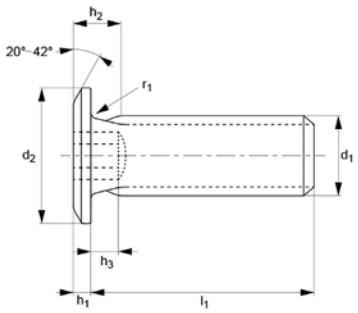



Part Number	Drive Type	l_1	h1	d_1	d_2	r_1	Material
20203771	Hex Drive	5.0	1.5	M2.5	5.0	0.10	Blackened Stainless 303
20204457	Hex Drive	5.0	1.5	M2.5	5.0	0.10	Blackened Stainless 316
20203108	Hex Drive	6.0	1.5	M2.5	5.0	0.10	316 Stainless Steel
20203788	Hex Drive	6.0	1.5	M2.5	5.0	0.10	Blackened Stainless 303
20204464	Hex Drive	6.0	1.5	M2.5	5.0	0.10	Blackened Stainless 316
20203115	Hex Drive	8.0	1.5	M2.5	5.0	0.10	316 Stainless Steel
20203795	Hex Drive	8.0	1.5	M2.5	5.0	0.10	Blackened Stainless 303
20204471	Hex Drive	8.0	1.5	M2.5	5.0	0.10	Blackened Stainless 316
20203122	Hex Drive	10.0	1.5	M2.5	5.0	0.10	316 Stainless Steel
20203801	Hex Drive	10.0	1.5	M2.5	5.0	0.10	Blackened Stainless 303
20204488	Hex Drive	10.0	1.5	M2.5	5.0	0.10	Blackened Stainless 316
20203139	Hex Drive	12.0	1.5	M2.5	5.0	0.10	316 Stainless Steel
20203818	Hex Drive	12.0	1.5	M2.5	5.0	0.10	Blackened Stainless 303
20204495	Hex Drive	12.0	1.5	M2.5	5.0	0.10	Blackened Stainless 316
20203146	Hex Drive	4.0	1.5	M3	6.0	0.10	316 Stainless Steel
20203825	Hex Drive	4.0	1.5	M3	6.0	0.10	Blackened Stainless 303
20204501	Hex Drive	4.0	1.5	M3	6.0	0.10	Blackened Stainless 316
20203153	Hex Drive	4.0	1.5	M3	6.0	0.10	316 Stainless Steel
20203832	Hex Drive	5.0	1.5	M3	6.0	0.10	Blackened Stainless 303
20204518	Hex Drive	5.0	1.5	M3	6.0	0.10	Blackened Stainless 316
20203160	Hex Drive	6.0	1.5	M3	6.0	0.10	316 Stainless Steel

Cap Screws - Low Head

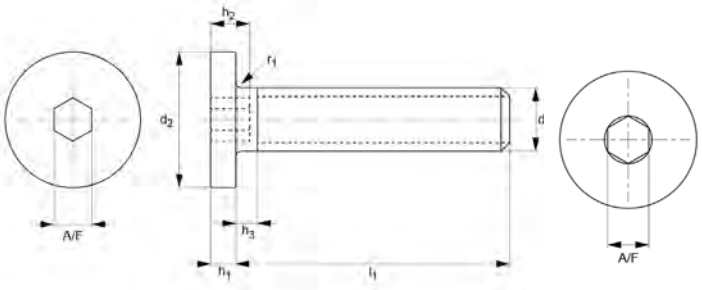

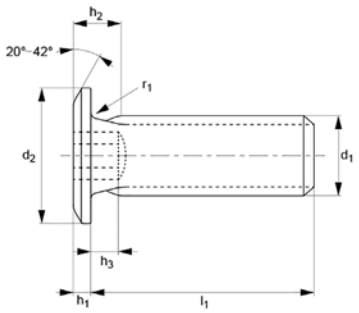



Part Number	Drive Type	l_1	h1	d_1	d_2	r_1	Material
20203849	Hex Drive	6.0	1.5	M3	6.0	0.10	Blackened Stainless 303
20204525	Hex Drive	6.0	1.5	M3	6.0	0.10	Blackened Stainless 316
20203177	Hex Drive	8.0	1.5	M3	6.0	0.10	316 Stainless Steel
20203856	Hex Drive	8.0	1.5	M3	6.0	0.10	Blackened Stainless 303
20204532	Hex Drive	8.0	1.5	M3	6.0	0.10	Blackened Stainless 316
20203184	Hex Drive	10.0	1.5	M3	6.0	0.10	316 Stainless Steel
20203863	Hex Drive	10.0	1.5	M3	6.0	0.10	Blackened Stainless 303
20204549	Hex Drive	10.0	1.5	M3	6.0	0.10	Blackened Stainless 316
20203191	Hex Drive	12.0	1.5	M3	6.0	0.10	316 Stainless Steel
20203870	Hex Drive	12.0	1.5	M3	6.0	0.10	Blackened Stainless 303
20204556	Hex Drive	12.0	1.5	M3	6.0	0.10	Blackened Stainless 316
20203207	Hex Drive	14.0	1.5	M3	6.0	0.10	316 Stainless Steel
20203887	Hex Drive	14.0	1.5	M3	6.0	0.10	Blackened Stainless 303
20204563	Hex Drive	14.0	1.5	M3	6.0	0.10	Blackened Stainless 316
20203214	Hex Drive	16.0	1.5	M3	6.0	0.10	316 Stainless Steel
20203894	Hex Drive	16.0	1.5	M3	6.0	0.10	Blackened Stainless 303
20204570	Hex Drive	16.0	1.5	M3	6.0	0.10	Blackened Stainless 316
20203221	Hex Drive	5.0	1.5	M4	8.0	0.20	316 Stainless Steel
20203900	Hex Drive	5.0	1.5	M4	8.0	0.20	Blackened Stainless 303
20204587	Hex Drive	5.0	1.5	M4	8.0	0.20	Blackened Stainless 316
20203238	Hex Drive	6.0	1.5	M4	8.0	0.20	316 Stainless Steel

Cap Screws - Low Head

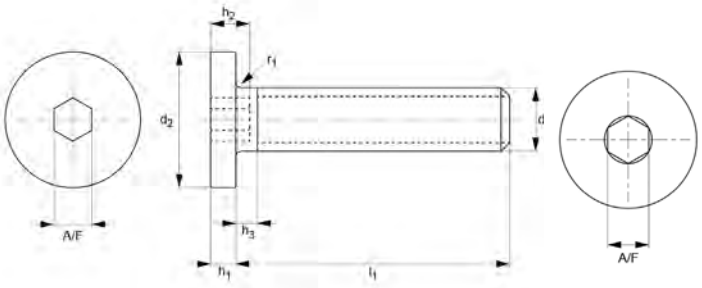

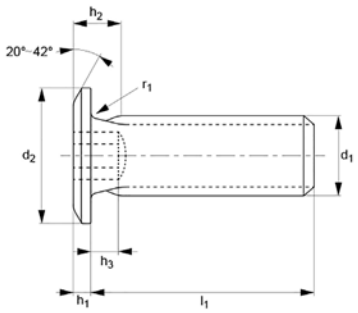



Part Number	Drive Type	l_1	h1	d_1	d_2	r_1	Material
20203917	Hex Drive	6.0	1.5	M4	8.0	0.20	Blackened Stainless 303
20204594	Hex Drive	6.0	1.5	M4	8.0	0.20	Blackened Stainless 316
20203245	Hex Drive	8.0	1.5	M4	8.0	0.20	316 Stainless Steel
20203924	Hex Drive	8.0	1.5	M4	8.0	0.20	Blackened Stainless 303
20204600	Hex Drive	8.0	1.5	M4	8.0	0.20	Blackened Stainless 316
20203252	Hex Drive	10.0	1.5	M4	8.0	0.20	316 Stainless Steel
20203931	Hex Drive	10.0	1.5	M4	8.0	0.20	Blackened Stainless 303
20204617	Hex Drive	10.0	1.5	M4	8.0	0.20	Blackened Stainless 316
20203269	Hex Drive	12.0	1.5	M4	8.0	0.20	316 Stainless Steel
20203948	Hex Drive	12.0	1.5	M4	8.0	0.20	Blackened Stainless 303
20204624	Hex Drive	12.0	1.5	M4	8.0	0.20	Blackened Stainless 316
20203276	Hex Drive	14.0	1.5	M4	8.0	0.20	316 Stainless Steel
20203955	Hex Drive	14.0	1.5	M4	8.0	0.20	Blackened Stainless 303
20204631	Hex Drive	14.0	1.5	M4	8.0	0.20	Blackened Stainless 316
20203283	Hex Drive	16.0	1.5	M4	8.0	0.20	316 Stainless Steel
20203962	Hex Drive	16.0	1.5	M4	8.0	0.20	Blackened Stainless 303
20204648	Hex Drive	16.0	1.5	M4	8.0	0.20	Blackened Stainless 316
20203290	Hex Drive	18.0	1.5	M4	8.0	0.20	316 Stainless Steel
20203979	Hex Drive	18.0	1.5	M4	8.0	0.20	Blackened Stainless 303
20204655	Hex Drive	18.0	1.5	M4	8.0	0.20	Blackened Stainless 316
20203306	Hex Drive	20.0	1.5	M4	8.0	0.20	316 Stainless Steel

Cap Screws - Low Head

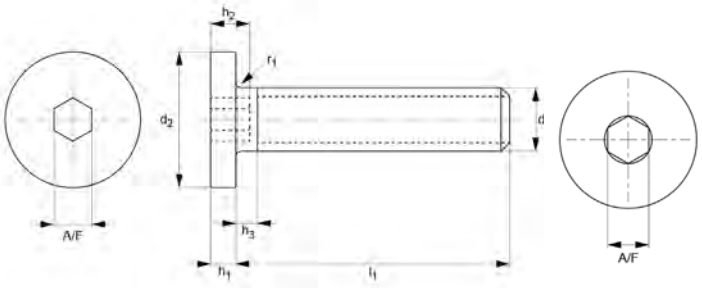

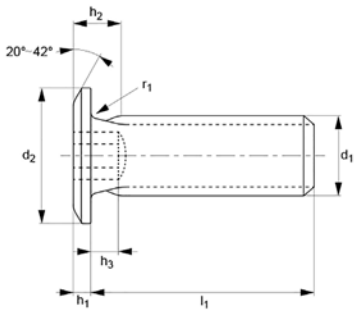



Part Number	Drive Type	l_1	h1	d_1	d_2	r_1	Material
20203986	Hex Drive	20.0	1.5	M4	8.0	0.20	Blackened Stainless 303
20204662	Hex Drive	20.0	1.5	M4	8.0	0.20	Blackened Stainless 316
20203313	Hex Drive	6.0	1.5	M5	9.0	0.20	316 Stainless Steel
20203993	Hex Drive	6.0	1.5	M5	9.0	0.20	Blackened Stainless 303
20204679	Hex Drive	6.0	1.5	M5	9.0	0.20	Blackened Stainless 316
20203320	Hex Drive	8.0	1.5	M5	9.0	0.20	316 Stainless Steel
20204686	Hex Drive	8.0	1.5	M5	9.0	0.20	Blackened Stainless 316
20203337	Hex Drive	10.0	1.5	M5	9.0	0.20	316 Stainless Steel
20204693	Hex Drive	10.0	1.5	M5	9.0	0.20	Blackened Stainless 316
20203344	Hex Drive	12.0	1.5	M5	9.0	0.20	316 Stainless Steel
20204709	Hex Drive	12.0	1.5	M5	9.0	0.20	Blackened Stainless 316
20203351	Hex Drive	14.0	1.5	M5	9.0	0.20	316 Stainless Steel
20204716	Hex Drive	14.0	1.5	M5	9.0	0.20	Blackened Stainless 316
20203368	Hex Drive	16.0	1.5	M5	9.0	0.20	316 Stainless Steel
20204723	Hex Drive	16.0	1.5	M5	9.0	0.20	Blackened Stainless 316
20203375	Hex Drive	18.0	1.5	M5	9.0	0.20	316 Stainless Steel
20204730	Hex Drive	18.0	1.5	M5	9.0	0.20	Blackened Stainless 316
20203382	Hex Drive	20.0	1.5	M5	9.0	0.20	316 Stainless Steel
20204747	Hex Drive	20.0	1.5	M5	9.0	0.20	Blackened Stainless 316
20203399	Hex Drive	25.0	1.5	M5	9.0	0.20	316 Stainless Steel
20204075	Hex Drive	25.0	1.5	M5	9.0	0.20	Blackened Stainless 303

Cap Screws - Low Head

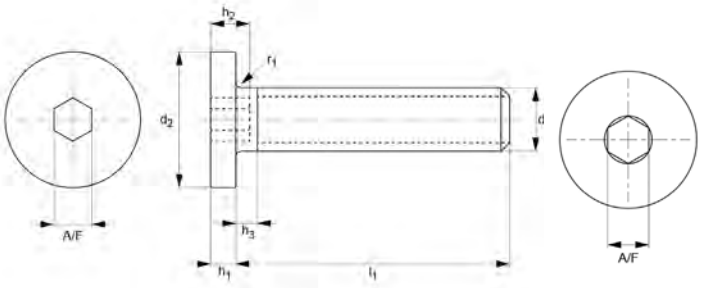

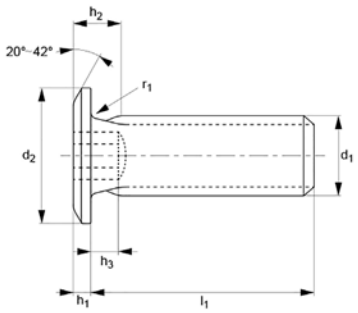



Part Number	Drive Type	l_1	h1	d_1	d_2	r_1	Material
20204754	Hex Drive	25.0	1.5	M5	9.0	0.20	Blackened Stainless 316
20203405	Hex Drive	6.0	1.5	M6	10.0	0.25	316 Stainless Steel
20204082	Hex Drive	6.0	1.5	M6	10.0	0.25	Blackened Stainless 303
20204761	Hex Drive	6.0	1.5	M6	10.0	0.25	Blackened Stainless 316
20203412	Hex Drive	8.0	1.5	M6	10.0	0.25	316 Stainless Steel
20204778	Hex Drive	8.0	1.5	M6	10.0	0.25	Blackened Stainless 316
20203429	Hex Drive	10.0	1.5	M6	10.0	0.25	316 Stainless Steel
20204785	Hex Drive	10.0	1.5	M6	10.0	0.25	Blackened Stainless 316
20203436	Hex Drive	12.0	1.5	M6	10.0	0.25	316 Stainless Steel
20204112	Hex Drive	12.0	1.5	M6	10.0	0.25	Blackened Stainless 303
20204792	Hex Drive	12.0	1.5	M6	10.0	0.25	Blackened Stainless 316
20203443	Hex Drive	14.0	1.5	M6	10.0	0.25	316 Stainless Steel
20204129	Hex Drive	14.0	1.5	M6	10.0	0.25	Blackened Stainless 303
20204808	Hex Drive	14.0	1.5	M6	10.0	0.25	Blackened Stainless 316
20203450	Hex Drive	16.0	1.5	M6	10.0	0.25	316 Stainless Steel
20204136	Hex Drive	16.0	1.5	M6	10.0	0.25	Blackened Stainless 303
20204815	Hex Drive	16.0	1.5	M6	10.0	0.25	Blackened Stainless 316
20203467	Hex Drive	18.0	1.5	M6	10.0	0.25	316 Stainless Steel
20204143	Hex Drive	18.0	1.5	M6	10.0	0.25	Blackened Stainless 303
20204822	Hex Drive	18.0	1.5	M6	10.0	0.25	Blackened Stainless 316
20203474	Hex Drive	20.0	1.5	M6	10.0	0.25	316 Stainless Steel

Cap Screws - Low Head

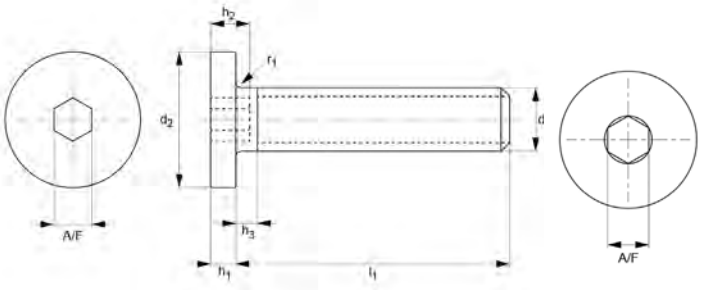

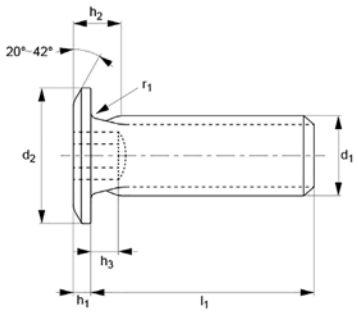



Part Number	Drive Type	l_1	h1	d_1	d_2	r_1	Material
20204150	Hex Drive	20.0	1.5	M6	10.0	0.25	Blackened Stainless 303
20204839	Hex Drive	20.0	1.5	M6	10.0	0.25	Blackened Stainless 316
20203481	Hex Drive	25.0	1.5	M6	10.0	0.25	316 Stainless Steel
20204167	Hex Drive	25.0	1.5	M6	10.0	0.25	Blackened Stainless 303
20204846	Hex Drive	25.0	1.5	M6	10.0	0.25	Blackened Stainless 316
20203498	Hex Drive	30.0	1.5	M6	10.0	0.25	316 Stainless Steel
20204174	Hex Drive	30.0	1.5	M6	10.0	0.25	Blackened Stainless 303
20204853	Hex Drive	30.0	1.5	M6	10.0	0.25	Blackened Stainless 316
20203504	Hex Drive	6.0	1.5	M8	13.0	0.40	316 Stainless Steel
20204181	Hex Drive	6.0	1.5	M8	13.0	0.40	Blackened Stainless 303
20204860	Hex Drive	6.0	1.5	M8	13.0	0.40	Blackened Stainless 316
20203511	Hex Drive	8.0	1.5	M8	13.0	0.40	316 Stainless Steel
20204198	Hex Drive	8.0	1.5	M8	13.0	0.40	Blackened Stainless 303
20204877	Hex Drive	8.0	1.5	M8	13.0	0.40	Blackened Stainless 316
20203528	Hex Drive	10.0	1.5	M8	13.0	0.40	316 Stainless Steel
20204204	Hex Drive	10.0	1.5	M8	13.0	0.40	Blackened Stainless 303
20204884	Hex Drive	10.0	1.5	M8	13.0	0.40	Blackened Stainless 316
20203535	Hex Drive	12.0	1.5	M8	13.0	0.40	316 Stainless Steel
20204211	Hex Drive	12.0	1.5	M8	13.0	0.40	Blackened Stainless 303
20204891	Hex Drive	12.0	1.5	M8	13.0	0.40	Blackened Stainless 316
20203542	Hex Drive	14.0	1.5	M8	13.0	0.40	316 Stainless Steel

Cap Screws - Low Head

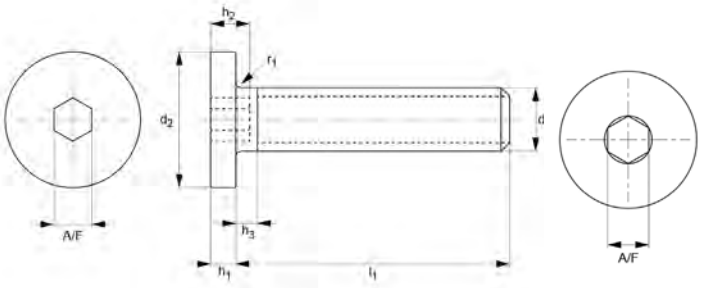

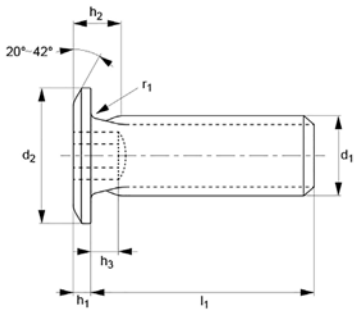



Part Number	Drive Type	l_1	h1	d_1	d_2	r_1	Material
20204228	Hex Drive	14.0	1.5	M8	13.0	0.40	Blackened Stainless 303
20204907	Hex Drive	14.0	1.5	M8	13.0	0.40	Blackened Stainless 316
20203559	Hex Drive	16.0	1.5	M8	13.0	0.40	316 Stainless Steel
20204235	Hex Drive	16.0	1.5	M8	13.0	0.40	Blackened Stainless 303
20204914	Hex Drive	16.0	1.5	M8	13.0	0.40	Blackened Stainless 316
20203566	Hex Drive	18.0	1.5	M8	13.0	0.40	316 Stainless Steel
20204242	Hex Drive	18.0	1.5	M8	13.0	0.40	Blackened Stainless 303
20204921	Hex Drive	18.0	1.5	M8	13.0	0.40	Blackened Stainless 316
20203573	Hex Drive	20.0	1.5	M8	13.0	0.40	316 Stainless Steel
20204259	Hex Drive	20.0	1.5	M8	13.0	0.40	Blackened Stainless 303
20204938	Hex Drive	20.0	1.5	M8	13.0	0.40	Blackened Stainless 316
20203580	Hex Drive	25.0	1.5	M8	13.0	0.40	316 Stainless Steel
20204266	Hex Drive	25.0	1.5	M8	13.0	0.40	Blackened Stainless 303
20204945	Hex Drive	25.0	1.5	M8	13.0	0.40	Blackened Stainless 316
20203597	Hex Drive	30.0	1.5	M8	13.0	0.40	316 Stainless Steel
20204273	Hex Drive	30.0	1.5	M8	13.0	0.40	Blackened Stainless 303
20204952	Hex Drive	30.0	1.5	M8	13.0	0.40	Blackened Stainless 316
20203603	Hex Drive	10.0	1.5	M10	16.0	0.40	316 Stainless Steel
20204280	Hex Drive	10.0	1.5	M10	16.0	0.40	Blackened Stainless 303
20204969	Hex Drive	10.0	1.5	M10	16.0	0.40	Blackened Stainless 316
20203610	Hex Drive	12.0	1.5	M10	16.0	0.40	316 Stainless Steel

Cap Screws - Low Head

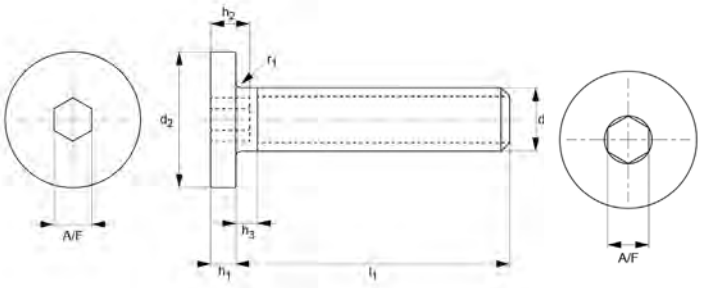

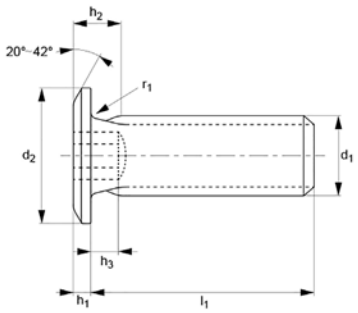



Part Number	Drive Type	l_1	h1	d_1	d_2	r_1	Material
20204297	Hex Drive	12.0	1.5	M10	16.0	0.40	Blackened Stainless 303
20204976	Hex Drive	12.0	1.5	M10	16.0	0.40	Blackened Stainless 316
20203627	Hex Drive	14.0	1.5	M10	16.0	0.40	316 Stainless Steel
20204303	Hex Drive	14.0	1.5	M10	16.0	0.40	Blackened Stainless 303
20204983	Hex Drive	14.0	1.5	M10	16.0	0.40	Blackened Stainless 316
20203634	Hex Drive	16.0	1.5	M10	16.0	0.40	316 Stainless Steel
20204310	Hex Drive	16.0	1.5	M10	16.0	0.40	Blackened Stainless 303
20204990	Hex Drive	16.0	1.5	M10	16.0	0.40	Blackened Stainless 316
20203641	Hex Drive	18.0	1.5	M10	16.0	0.40	316 Stainless Steel
20204327	Hex Drive	18.0	1.5	M10	16.0	0.40	Blackened Stainless 303
20205003	Hex Drive	18.0	1.5	M10	16.0	0.40	Blackened Stainless 316
20203658	Hex Drive	20.0	1.5	M10	16.0	0.40	316 Stainless Steel
20204334	Hex Drive	20.0	1.5	M10	16.0	0.40	Blackened Stainless 303
20205010	Hex Drive	20.0	1.5	M10	16.0	0.40	Blackened Stainless 316
20203665	Hex Drive	25.0	1.5	M10	16.0	0.40	316 Stainless Steel
20204341	Hex Drive	25.0	1.5	M10	16.0	0.40	Blackened Stainless 303
20205027	Hex Drive	25.0	1.5	M10	16.0	0.40	Blackened Stainless 316
20203672	Hex Drive	30.0	1.5	M10	16.0	0.40	316 Stainless Steel
20204358	Hex Drive	30.0	1.5	M10	16.0	0.40	Blackened Stainless 303
20205034	Hex Drive	30.0	1.5	M10	16.0	0.40	Blackened Stainless 316
20596453	Hex Drive	14.0	1.5	M5	9.0	0.20	Blackened Stainless 303

Cap Screws - Low Head

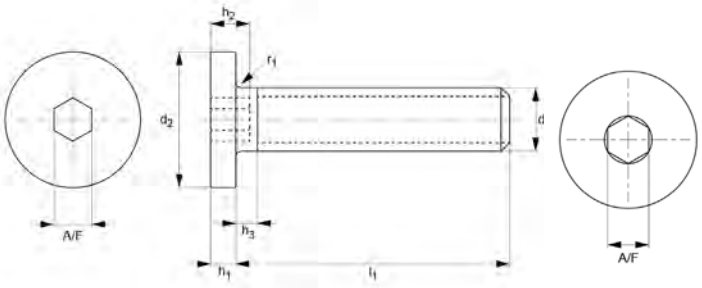

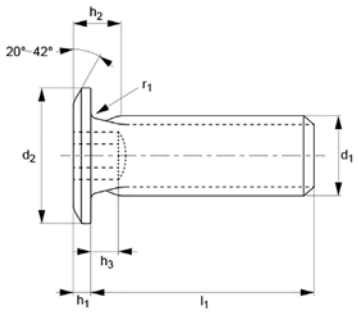



Part Number	Drive Type	l_1	h1	d_1	d_2	r_1	Material
20596606	Hex Drive	8.0	1.5	M5	9.0	0.20	Blackened Stainless 303
20597054	Hex Drive	12.0	1.5	M5	9.0	0.20	Blackened Stainless 303
20596231	Hex Drive	16.0	1.5	M5	9.0	0.20	Blackened Stainless 303
20596439	Hex Drive	10.0	1.5	M6	10.0	0.25	Blackened Stainless 303
20596286	Hex Drive	8.0	1.5	M6	10.0	0.25	Blackened Stainless 303
20596804	Hex Drive	10.0	1.5	M5	9.0	0.20	Blackened Stainless 303
20596613	Hex Drive	20.0	1.5	M5	9.0	0.20	Blackened Stainless 303
20597078	Hex Drive	18.0	1.5	M5	9.0	0.20	Blackened Stainless 303

Captive Screw Retainer Flange

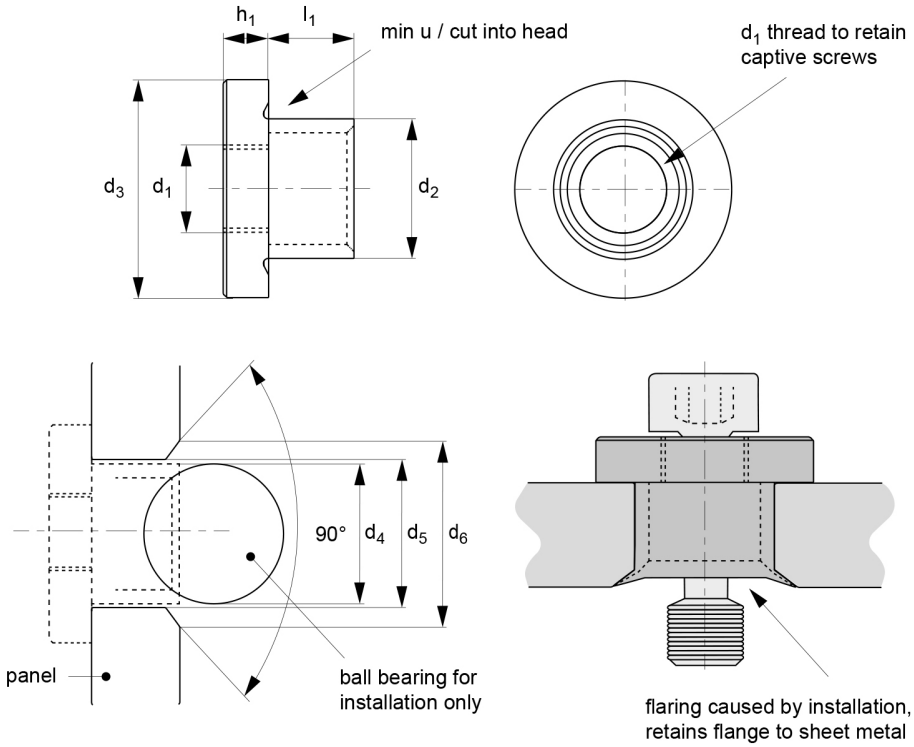



Features

- The captive screw retainer flange is an alternative to either tapping the panel or using a retainer washer.
- It has a good thermal conductivity.
- Alternative to either tapping the panel or using a retainer washer.

Specifications

Material: 303 Stainless Steel, Aluminium

The captive screw retainer flange is an alternative to either tapping the panel or using a retainer washer. The retainer flange is fixed to the panel by swaging the head into a countersunk hole.

The captive screw is then simply threaded through the flange and is retained in the panel.

The flanges are made from either Stainless Steel which has good corrosion reistance or Aluminium, which has good thermal conductivity.

Captive Screw Retainer Flange

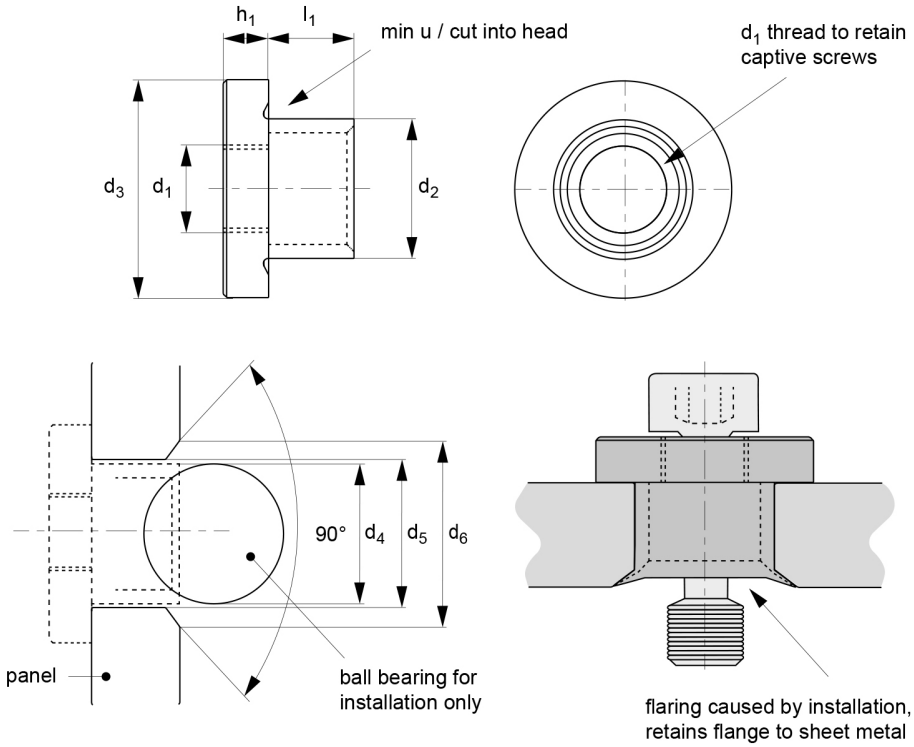



Part Number	For thread d1	Panel t_1±8%	d2	H1	l1	D3	Material
20252151	M3	0.7	5.0	1.5	0.7	7.5	Aluminium
20252168	M3	0.9	5.0	1.5	0.9	7.5	Aluminium
20252175	M3	1.25	5.0	1.5	1.25	7.5	Aluminium
20252182	M3	1.5	5.0	1.5	1.5	7.5	Aluminium
20252199	M3	2.0	5.0	1.5	2.0	7.5	Aluminium
20252205	M3	2.5	5.0	1.5	2.5	7.5	Aluminium
20252212	M3	3.0	5.0	1.5	3.0	7.5	Aluminium
20252229	M3	4.0	5.0	1.5	4.0	7.5	Aluminium
20252236	M3	5.0	5.0	1.5	5.0	7.5	Aluminium
20252243	M3	6.0	5.0	1.5	6.0	7.5	Aluminium
20180232	M3	0.70	5.0	1.5	0.70	7.5	303 Stainless Steel
20180249	M3	0.90	5.0	1.5	0.90	7.5	303 Stainless Steel
20180256	M3	1.25	5.0	1.5	1.25	7.5	303 Stainless Steel
20180263	M3	1.50	5.0	1.5	1.50	7.5	303 Stainless Steel
20180270	M3	2.00	5.0	1.5	2.00	7.5	303 Stainless Steel
20180287	M3	2.50	5.0	1.5	2.50	7.5	303 Stainless Steel
20180294	M3	3.00	5.0	1.5	3.00	7.5	303 Stainless Steel
20180300	M3	4.00	5.0	1.5	4.00	7.5	303 Stainless Steel
20180317	M3	5.00	5.0	1.5	5.00	7.5	303 Stainless Steel

Captive Screw Retainer Flange

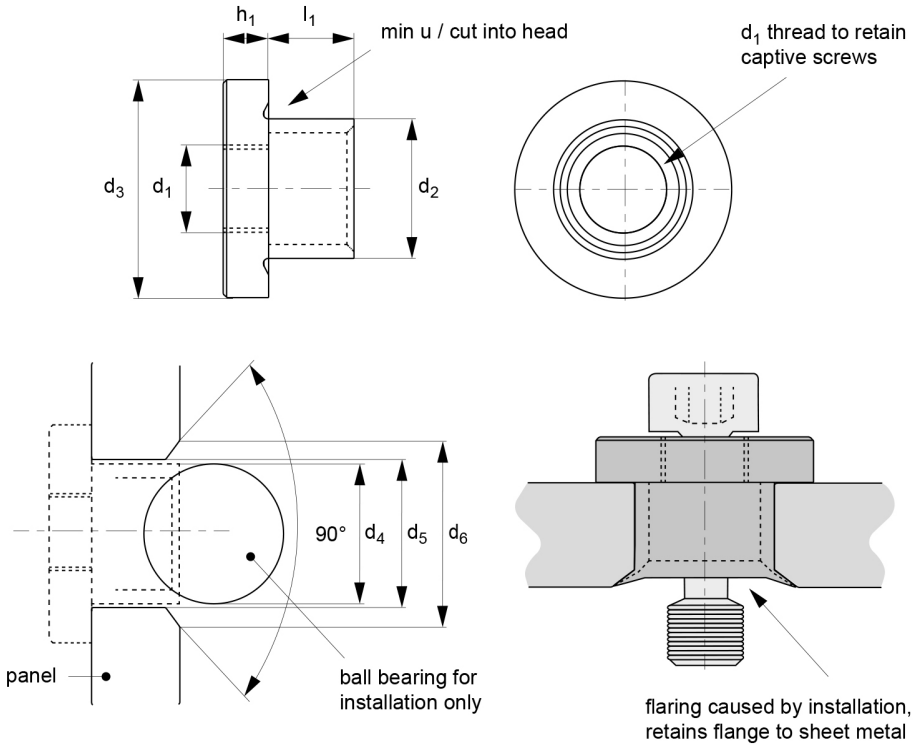



Part Number	For thread d1	Panel t_1±8%	d2	H1	l1	D3	Material
20180324	M3	6.00	5.0	1.5	6.00	7.5	303 Stainless Steel
20252250	M4	0.7	6.8	2.0	0.7	10.0	Aluminium
20252267	M4	0.9	6.8	2.0	0.9	10.0	Aluminium
20252274	M4	1.25	6.8	2.0	1.25	10.0	Aluminium
20252281	M4	1.5	6.8	2.0	1.5	10.0	Aluminium
20252298	M4	2.0	6.8	2.0	2.0	10.0	Aluminium
20252304	M4	2.5	6.8	2.0	2.5	10.0	Aluminium
20252311	M4	3.0	6.8	2.0	3.0	10.0	Aluminium
20252328	M4	4.0	6.8	2.0	4.0	10.0	Aluminium
20252335	M4	5.0	6.8	2.0	5.0	10.0	Aluminium
20252342	M4	6.0	6.8	2.0	6.0	10.0	Aluminium
20180331	M4	0.70	6.8	2.0	0.70	10.0	303 Stainless Steel
20180348	M4	0.90	6.8	2.0	0.90	10.0	303 Stainless Steel
20180355	M4	1.25	6.8	2.0	1.25	10.0	303 Stainless Steel
20180362	M4	1.50	6.8	2.0	1.50	10.0	303 Stainless Steel
20180379	M4	2.00	6.8	2.0	2.00	10.0	303 Stainless Steel
20180386	M4	2.50	6.8	2.0	2.50	10.0	303 Stainless Steel
20180393	M4	3.00	6.8	2.0	3.00	10.0	303 Stainless Steel
20180409	M4	4.00	6.8	2.0	4.00	10.0	303 Stainless Steel

Captive Screw Retainer Flange

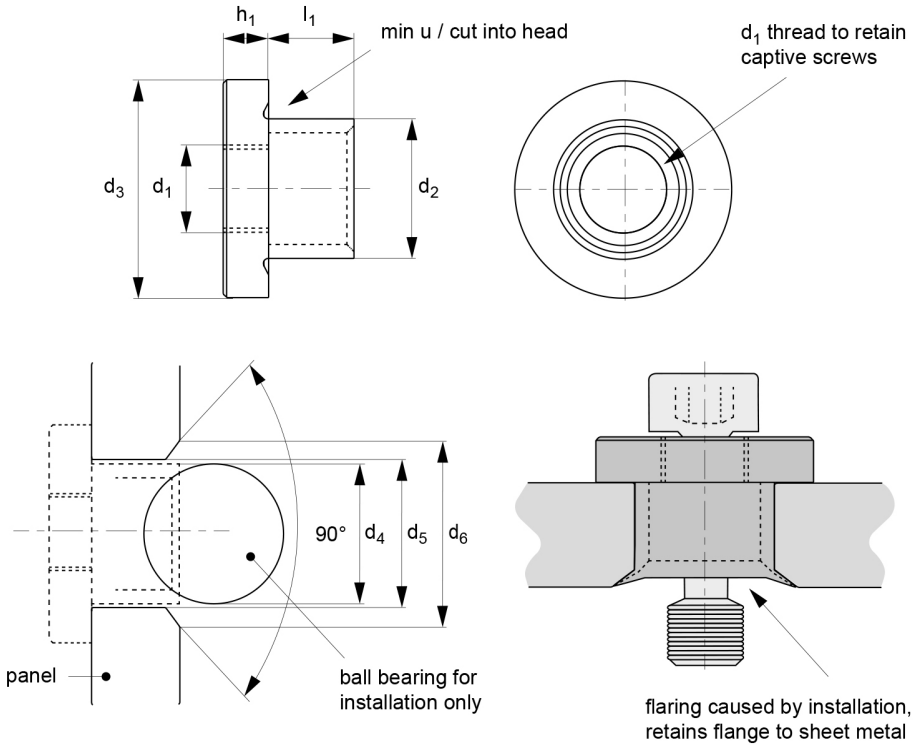



Part Number	For thread d1	Panel t_1±8%	d2	H1	l1	D3	Material
20180416	M4	5.00	6.8	2.0	5.00	10.0	303 Stainless Steel
20180423	M4	6.00	6.8	2.0	6.00	10.0	303 Stainless Steel
20252359	M5	0.7	8.0	2.5	0.7	12.5	Aluminium
20252366	M5	0.9	8.0	2.5	0.9	12.5	Aluminium
20252373	M5	1.25	8.0	2.5	1.25	12.5	Aluminium
20252380	M5	1.5	8.0	2.5	1.5	12.5	Aluminium
20252397	M5	2.0	8.0	2.5	2.0	12.5	Aluminium
20252403	M5	2.5	8.0	2.5	2.5	12.5	Aluminium
20252410	M5	3.0	8.0	2.5	3.0	12.5	Aluminium
20252427	M5	4.0	8.0	2.5	4.0	12.5	Aluminium
20252434	M5	5.0	8.0	2.5	5.0	12.5	Aluminium
20252441	M5	6.0	8.0	2.5	6.0	12.5	Aluminium
20180430	M5	0.70	8.0	2.5	0.70	12.5	303 Stainless Steel
20180447	M5	0.90	8.0	2.5	0.90	12.5	303 Stainless Steel
20180454	M5	1.25	8.0	2.5	1.25	12.5	303 Stainless Steel
20180461	M5	1.50	8.0	2.5	1.50	12.5	303 Stainless Steel
20180478	M5	2.00	8.0	2.5	2.00	12.5	303 Stainless Steel
20180485	M5	2.50	8.0	2.5	2.50	12.5	303 Stainless Steel
20180492	M5	3.00	8.0	2.5	3.00	12.5	303 Stainless Steel

Captive Screw Retainer Flange

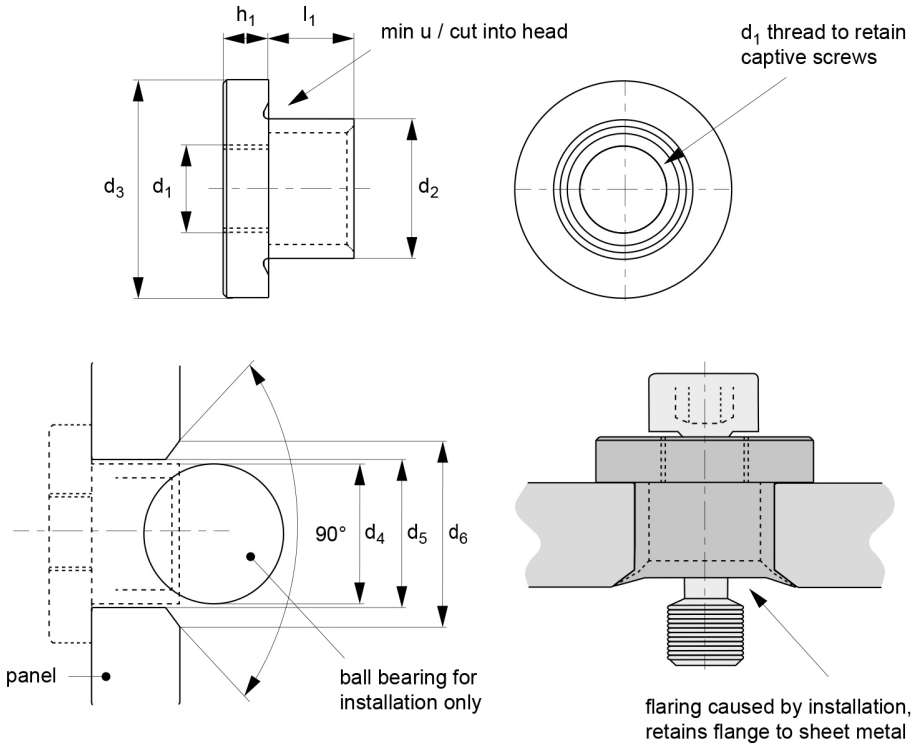



Part Number	For thread d1	Panel t_1±8%	d2	H1	l1	D3	Material
20180508	M5	4.00	8.0	2.5	4.00	12.5	303 Stainless Steel
20180515	M5	5.00	8.0	2.5	5.00	12.5	303 Stainless Steel
20180522	M5	6.00	8.0	2.5	6.00	12.5	303 Stainless Steel
20252458	M6	0.7	10.0	3.0	0.7	15.0	Aluminium
20252465	M6	0.9	10.0	3.0	0.9	15.0	Aluminium
20252472	M6	1.25	10.0	3.0	1.25	15.0	Aluminium
20252489	M6	1.5	10.0	3.0	1.5	15.0	Aluminium
20252496	M6	2.0	10.0	3.0	2.0	15.0	Aluminium
20252502	M6	2.5	10.0	3.0	2.5	15.0	Aluminium
20252519	M6	3.0	10.0	3.0	3.0	15.0	Aluminium
20252526	M6	4.0	10.0	3.0	4.0	15.0	Aluminium
20252533	M6	5.0	10.0	3.0	5.0	15.0	Aluminium
20252540	M6	6.0	10.0	3.0	6.0	15.0	Aluminium
20180539	M6	0.70	10.0	3.0	0.70	15.0	303 Stainless Steel
20180546	M6	0.90	10.0	3.0	0.90	15.0	303 Stainless Steel
20180553	M6	1.25	10.0	3.0	1.25	15.0	303 Stainless Steel
20180171	M6	1.50	10.0	3.0	1.50	15.0	303 Stainless Steel
20180560	M6	2.00	10.0	3.0	2.00	15.0	303 Stainless Steel
20180577	M6	2.50	10.0	3.0	2.50	15.0	303 Stainless Steel

Captive Screw Retainer Flange

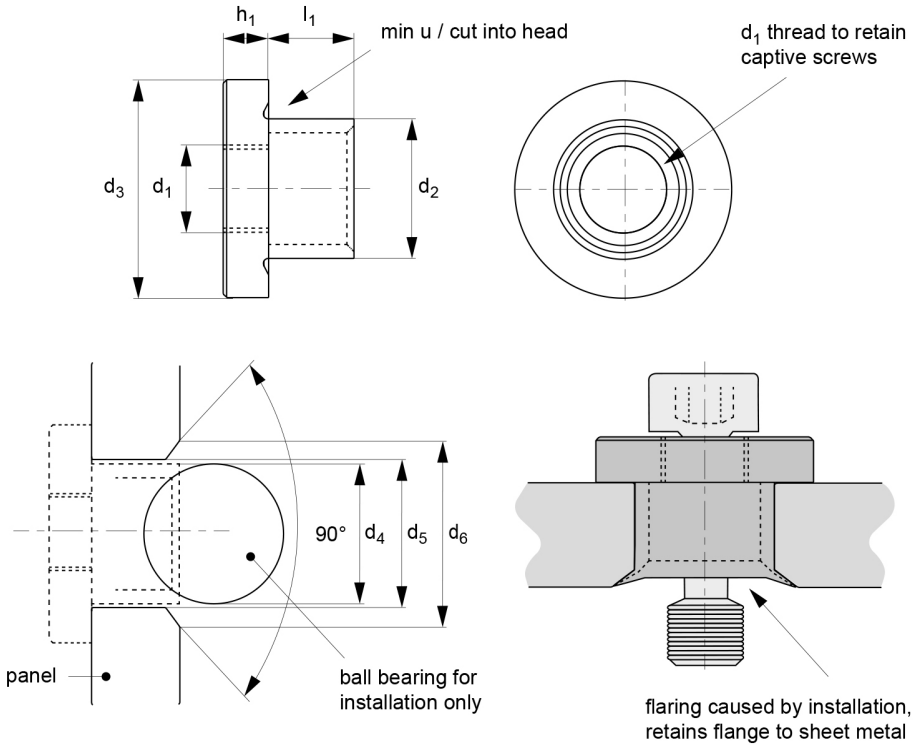



Part Number	For thread d1	Panel t_1±8%	d2	H1	l1	D3	Material
20180164	M6	3.00	10.0	3.0	3.00	15.0	303 Stainless Steel
20180584	M6	4.00	10.0	3.0	4.00	15.0	303 Stainless Steel
20180591	M6	5.00	10.0	3.0	5.00	15.0	303 Stainless Steel
20180607	M6	6.00	10.0	3.0	6.00	15.0	303 Stainless Steel
20252557	M8	0.7	13.0	4.0	0.7	20.0	Aluminium
20252564	M8	0.9	13.0	4.0	0.9	20.0	Aluminium
20252571	M8	1.25	13.0	4.0	1.25	20.0	Aluminium
20252588	M8	1.5	13.0	4.0	1.5	20.0	Aluminium
20252595	M8	2.0	13.0	4.0	2.0	20.0	Aluminium
20252601	M8	2.5	13.0	4.0	2.5	20.0	Aluminium
20252618	M8	3.0	13.0	4.0	3.0	20.0	Aluminium
20252625	M8	4.0	13.0	4.0	4.0	20.0	Aluminium
20252632	M8	5.0	13.0	4.0	5.0	20.0	Aluminium
20252649	M8	6.0	13.0	4.0	6.0	20.0	Aluminium
20180614	M8	0.70	13.0	4.0	0.70	20.0	303 Stainless Steel
20198046	M8	0.90	13.0	4.0	0.90	20.0	303 Stainless Steel
20180638	M8	1.25	13.0	4.0	1.25	20.0	303 Stainless Steel
20180645	M8	1.50	13.0	4.0	1.50	20.0	303 Stainless Steel
20180652	M8	2.00	13.0	4.0	2.00	20.0	303 Stainless Steel

Captive Screw Retainer Flange

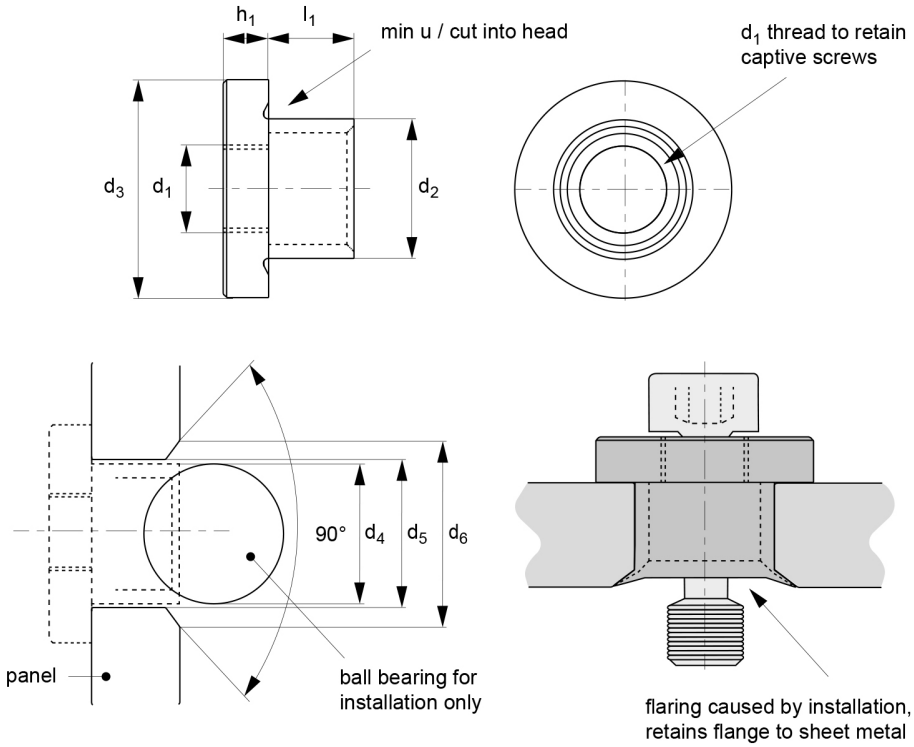



Part Number	For thread d1	Panel t_1±8%	d2	H1	l1	D3	Material
20180669	M8	2.50	13.0	4.0	2.50	20.0	303 Stainless Steel
20180676	M8	3.00	13.0	4.0	3.00	20.0	303 Stainless Steel
20180683	M8	4.00	13.0	4.0	4.00	20.0	303 Stainless Steel
20180690	M8	5.00	13.0	4.0	5.00	20.0	303 Stainless Steel
20180706	M8	6.00	13.0	4.0	6.00	20.0	303 Stainless Steel

Captive Screws - Button Head

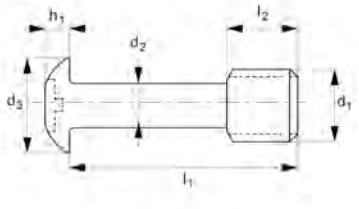

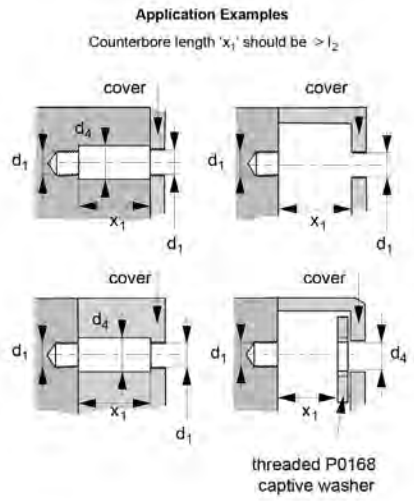



Features

- Torx drives provide a positive-engaging, fast-locating technique for transmitting drive torque with less necessary downward pressure.
- Used to comply with Machinery Detective 2006/42/EC - typically to ISO 14583.
- Designed to remain attached to the component they are installed in, even when fully loosened.

Specifications

Material: 316 Stainless Steel, 303 Stainless Steel

Captive Screws are fasteners designed to remain attached to the component they are securing, even when fully loosened, providing convenience, security and ease of use in a variety of applications. They are a popular choice for applications where screws need to be removed frequently or where safety is a concern, as these screws will stay firmly in place and will not loosen from the assembly.

This range of Captive Screws has a button head and a Torx drive. Torx drives provide a positive-engaging, fast-locating technique for transmitting drive torque with less necessary downward pressure. They are an excellent fitting option for panels with non-threaded holes when used in conjunction with our threaded captive washers. They are used to comply with Machinery Detective 2006/42/EC - typically to ISO 14583, which requires fasteners to stay attached to fixed guards or applications when they are removed.

The screws are made from Stainless Steel, which is corrosion resistant and slightly magnetic, and you can find a group of screws with a blackened finish and others without.These screws are commonly used in electronics, industrial machinery, cabinets, panels and medical devices. Please keep in mind that because these screws have a smaller shank diameter, they should not be tightened to the suggested torque for an identical screw with the same thread size.

Captive Screws - Button Head

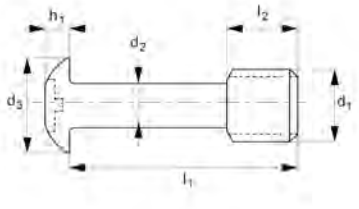



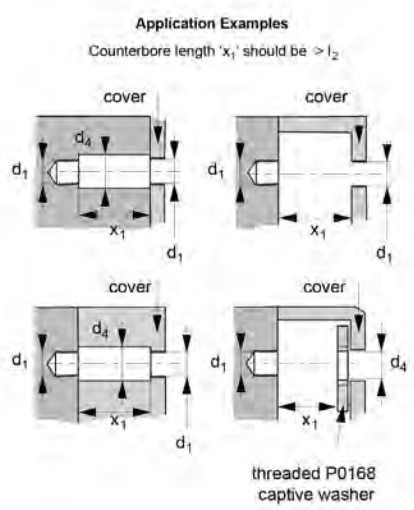



Part Number	d1	l1_025	d2 a012	d3 max	d4 min	h1 max	Material
20188597	M2.5	8.0	1.7	4.5	2.8	1.50	303 Stainless Steel
20188948	M2.5	8.0	1.7	4.5	2.8	1.50	316 Stainless Steel
20189297	M2.5	8.0	1.7	4.5	2.8	1.50	303 Stainless Steel
20189648	M2.5	8.0	1.7	4.5	2.8	1.50	316 Stainless Steel
20188603	M2.5	10.0	1.7	4.5	2.8	1.50	303 Stainless Steel
20188955	M2.5	10.0	1.7	4.5	2.8	1.50	316 Stainless Steel
20189303	M2.5	10.0	1.7	4.5	2.8	1.50	303 Stainless Steel
20189655	M2.5	10.0	1.7	4.5	2.8	1.50	316 Stainless Steel
20188610	M2.5	12.0	1.7	4.5	2.8	1.50	303 Stainless Steel
20188962	M2.5	12.0	1.7	4.5	2.8	1.50	316 Stainless Steel
20189310	M2.5	12.0	1.7	4.5	2.8	1.50	303 Stainless Steel
20189662	M2.5	12.0	1.7	4.5	2.8	1.50	316 Stainless Steel
20188627	M2.5	16.0	1.7	4.5	2.8	1.50	303 Stainless Steel
20188979	M2.5	16.0	1.7	4.5	2.8	1.50	316 Stainless Steel
20189327	M2.5	16.0	1.7	4.5	2.8	1.50	303 Stainless Steel
20189679	M2.5	16.0	1.7	4.5	2.8	1.50	316 Stainless Steel
20188634	M2.5	20.0	1.7	4.5	2.8	1.50	303 Stainless Steel
20188986	M2.5	20.0	1.7	4.5	2.8	1.50	316 Stainless Steel
20189334	M2.5	20.0	1.7	4.5	2.8	1.50	303 Stainless Steel
20189686	M2.5	20.0	1.7	4.5	2.8	1.50	316 Stainless Steel
20188641	M3	10.0	2.0	5.7	3.5	1.65	303 Stainless Steel

Captive Screws - Button Head

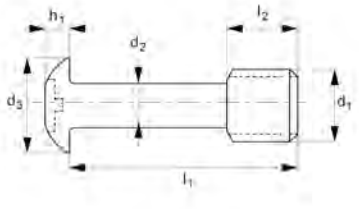



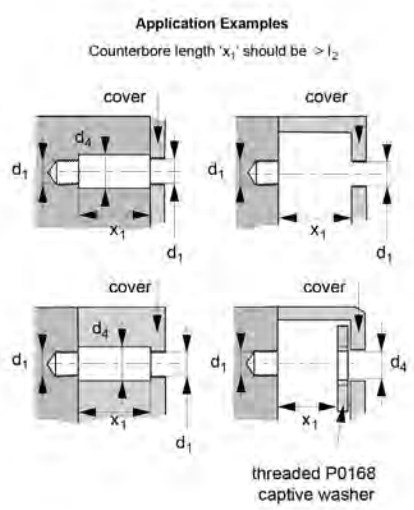



Part Number	d1	l1_025	d2 a012	d3 max	d4 min	h1 max	Material
20188993	M3	10.0	2.0	5.7	3.5	1.65	316 Stainless Steel
20189341	M3	10.0	2.0	5.7	3.5	1.65	303 Stainless Steel
20189693	M3	10.0	2.0	5.7	3.5	1.65	316 Stainless Steel
20188658	M3	16.0	2.0	5.7	3.5	1.65	303 Stainless Steel
20189006	M3	16.0	2.0	5.7	3.5	1.65	316 Stainless Steel
20189358	M3	16.0	2.0	5.7	3.5	1.65	303 Stainless Steel
20189709	M3	16.0	2.0	5.7	3.5	1.65	316 Stainless Steel
20188665	M3	20.0	2.0	5.7	3.5	1.65	303 Stainless Steel
20189013	M3	20.0	2.0	5.7	3.5	1.65	316 Stainless Steel
20189365	M3	20.0	2.0	5.7	3.5	1.65	303 Stainless Steel
20189716	M3	20.0	2.0	5.7	3.5	1.65	316 Stainless Steel
20188672	M3	25.0	2.0	5.7	3.5	1.65	303 Stainless Steel
20189020	M3	25.0	2.0	5.7	3.5	1.65	316 Stainless Steel
20189372	M3	25.0	2.0	5.7	3.5	1.65	303 Stainless Steel
20189723	M3	25.0	2.0	5.7	3.5	1.65	316 Stainless Steel
20188689	M3	30.0	2.0	5.7	3.5	1.65	303 Stainless Steel
20189037	M3	30.0	2.0	5.7	3.5	1.65	316 Stainless Steel
20189389	M3	30.0	2.0	5.7	3.5	1.65	303 Stainless Steel
20189730	M3	30.0	2.0	5.7	3.5	1.65	316 Stainless Steel
20188696	M3	40.0	2.0	5.7	3.5	1.65	303 Stainless Steel
20189044	M3	40.0	2.0	5.7	3.5	1.65	316 Stainless Steel

Captive Screws - Button Head

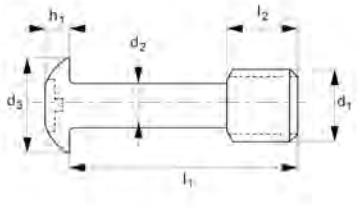



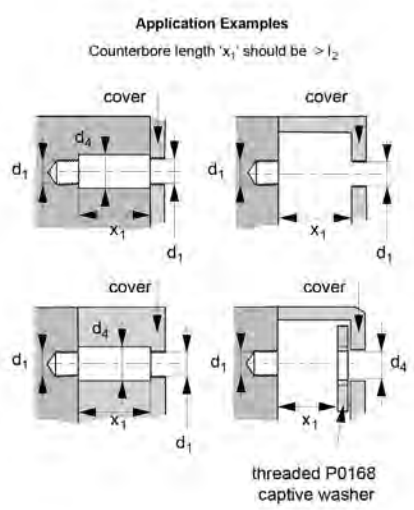



Part Number	d1	l1_025	d2 a012	d3 max	d4 min	h1 max	Material
20189396	M3	40.0	2.0	5.7	3.5	1.65	303 Stainless Steel
20189747	M3	40.0	2.0	5.7	3.5	1.65	316 Stainless Steel
20188702	M4	12.0	2.8	7.6	4.5	3.10	303 Stainless Steel
20189051	M4	12.0	2.8	7.6	4.5	3.10	316 Stainless Steel
20189402	M4	12.0	2.8	7.6	4.5	3.10	303 Stainless Steel
20189754	M4	12.0	2.8	7.6	4.5	3.10	316 Stainless Steel
20188719	M4	16.0	2.8	7.6	4.5	3.10	303 Stainless Steel
20189068	M4	16.0	2.8	7.6	4.5	3.10	316 Stainless Steel
20189419	M4	16.0	2.8	7.6	4.5	3.10	303 Stainless Steel
20189761	M4	16.0	2.8	7.6	4.5	3.10	316 Stainless Steel
20188726	M4	20.0	2.8	7.6	4.5	3.10	303 Stainless Steel
20189075	M4	20.0	2.8	7.6	4.5	3.10	316 Stainless Steel
20189426	M4	20.0	2.8	7.6	4.5	3.10	303 Stainless Steel
20189778	M4	20.0	2.8	7.6	4.5	3.10	316 Stainless Steel
20188733	M4	25.0	2.8	7.6	4.5	3.10	303 Stainless Steel
20189082	M4	25.0	2.8	7.6	4.5	3.10	316 Stainless Steel
20189433	M4	25.0	2.8	7.6	4.5	3.10	303 Stainless Steel
20189785	M4	25.0	2.8	7.6	4.5	3.10	316 Stainless Steel
20188740	M4	30.0	2.8	7.6	4.5	3.10	303 Stainless Steel
20189099	M4	30.0	2.8	7.6	4.5	3.10	316 Stainless Steel
20189440	M4	30.0	2.8	7.6	4.5	3.10	303 Stainless Steel

Captive Screws - Button Head

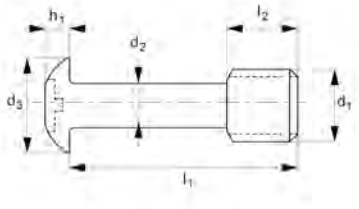



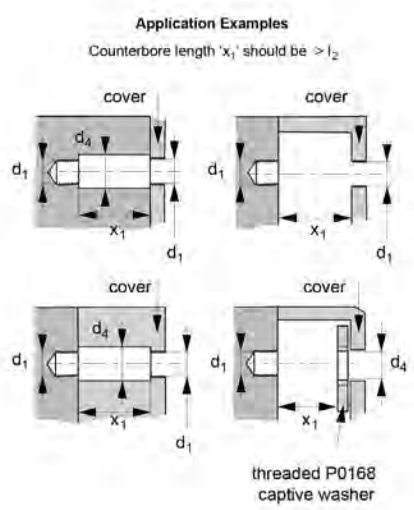



Part Number	d1	l1_025	d2 a012	d3 max	d4 min	h1 max	Material
20189792	M4	30.0	2.8	7.6	4.5	3.10	316 Stainless Steel
20188757	M4	40.0	2.8	7.6	4.5	3.10	303 Stainless Steel
20189105	M4	40.0	2.8	7.6	4.5	3.10	316 Stainless Steel
20189457	M4	40.0	2.8	7.6	4.5	3.10	303 Stainless Steel
20189808	M4	40.0	2.8	7.6	4.5	3.10	316 Stainless Steel
20188764	M4	50.0	2.8	7.6	4.5	3.10	303 Stainless Steel
20189112	M4	50.0	2.8	7.6	4.5	3.10	316 Stainless Steel
20189464	M4	50.0	2.8	7.6	4.5	3.10	303 Stainless Steel
20189815	M4	50.0	2.8	7.6	4.5	3.10	316 Stainless Steel
20188771	M4	60.0	2.8	7.6	4.5	3.10	303 Stainless Steel
20189129	M4	60.0	2.8	7.6	4.5	3.10	316 Stainless Steel
20189471	M4	60.0	2.8	7.6	4.5	3.10	303 Stainless Steel
20189822	M4	60.0	2.8	7.6	4.5	3.10	316 Stainless Steel
20188788	M5	12.0	3.7	9.5	5.5	3.70	303 Stainless Steel
20189136	M5	12.0	3.7	9.5	5.5	3.70	316 Stainless Steel
20189488	M5	12.0	3.7	9.5	5.5	3.70	303 Stainless Steel
20189839	M5	12.0	3.7	9.5	5.5	3.70	316 Stainless Steel
20188795	M5	16.0	3.7	9.5	5.5	3.70	303 Stainless Steel
20189143	M5	16.0	3.7	9.5	5.5	3.70	316 Stainless Steel
20189495	M5	16.0	3.7	9.5	5.5	3.70	303 Stainless Steel
20189846	M5	16.0	3.7	9.5	5.5	3.70	316 Stainless Steel

Captive Screws - Button Head

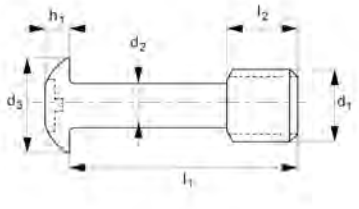



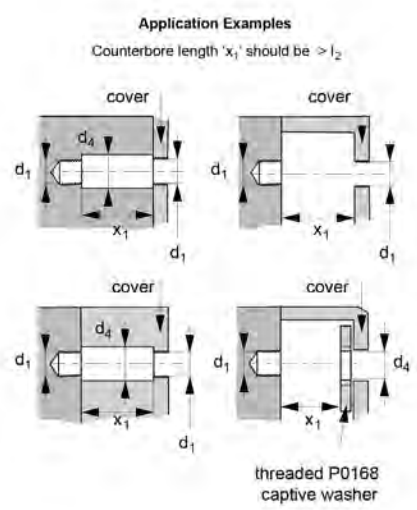



Part Number	d1	l1_025	d2 a012	d3 max	d4 min	h1 max	Material
20188801	M5	20.0	3.7	9.5	5.5	3.70	303 Stainless Steel
20189150	M5	20.0	3.7	9.5	5.5	3.70	316 Stainless Steel
20189501	M5	20.0	3.7	9.5	5.5	3.70	303 Stainless Steel
20189853	M5	20.0	3.7	9.5	5.5	3.70	316 Stainless Steel
20188818	M5	25.0	3.7	9.5	5.5	3.70	303 Stainless Steel
20189167	M5	25.0	3.7	9.5	5.5	3.70	316 Stainless Steel
20189518	M5	25.0	3.7	9.5	5.5	3.70	303 Stainless Steel
20189860	M5	25.0	3.7	9.5	5.5	3.70	316 Stainless Steel
20188825	M5	30.0	3.7	9.5	5.5	3.70	303 Stainless Steel
20189174	M5	30.0	3.7	9.5	5.5	3.70	316 Stainless Steel
20189525	M5	30.0	3.7	9.5	5.5	3.70	303 Stainless Steel
20189877	M5	30.0	3.7	9.5	5.5	3.70	316 Stainless Steel
20188832	M5	40.0	3.7	9.5	5.5	3.70	303 Stainless Steel
20189181	M5	40.0	3.7	9.5	5.5	3.70	316 Stainless Steel
20189532	M5	40.0	3.7	9.5	5.5	3.70	303 Stainless Steel
20189884	M5	40.0	3.7	9.5	5.5	3.70	316 Stainless Steel
20188849	M5	50.0	3.7	9.5	5.5	3.70	303 Stainless Steel
20189198	M5	50.0	3.7	9.5	5.5	3.70	316 Stainless Steel
20189549	M5	50.0	3.7	9.5	5.5	3.70	303 Stainless Steel
20189891	M5	50.0	3.7	9.5	5.5	3.70	316 Stainless Steel
20188856	M5	60.0	3.7	9.5	5.5	3.70	303 Stainless Steel

Captive Screws - Button Head

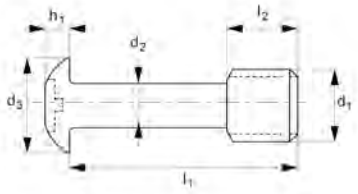



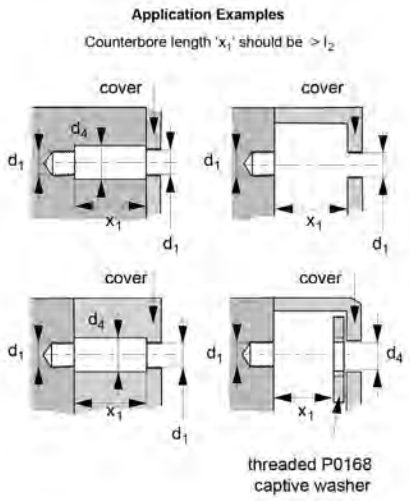



Part Number	d1	l1_025	d2 a012	d3 max	d4 min	h1 max	Material
20189204	M5	60.0	3.7	9.5	5.5	3.70	316 Stainless Steel
20189556	M5	60.0	3.7	9.5	5.5	3.70	303 Stainless Steel
20189907	M5	60.0	3.7	9.5	5.5	3.70	316 Stainless Steel
20188863	M6	16.0	4.2	10.5	6.5	4.70	303 Stainless Steel
20189211	M6	16.0	4.2	10.5	6.5	4.70	316 Stainless Steel
20189563	M6	16.0	4.2	10.5	6.5	4.70	303 Stainless Steel
20189914	M6	16.0	4.2	10.5	6.5	4.70	316 Stainless Steel
20188870	M6	20.0	4.2	10.5	6.5	4.70	303 Stainless Steel
20189228	M6	20.0	4.2	10.5	6.5	4.70	316 Stainless Steel
20189570	M6	20.0	4.2	10.5	6.5	4.70	303 Stainless Steel
20189921	M6	20.0	4.2	10.5	6.5	4.70	316 Stainless Steel
20188887	M6	25.0	4.2	10.5	6.5	4.70	303 Stainless Steel
20189235	M6	25.0	4.2	10.5	6.5	4.70	316 Stainless Steel
20189587	M6	25.0	4.2	10.5	6.5	4.70	303 Stainless Steel
20189938	M6	25.0	4.2	10.5	6.5	4.70	316 Stainless Steel
20188894	M6	30.0	4.2	10.5	6.5	4.70	303 Stainless Steel
20189242	M6	30.0	4.2	10.5	6.5	4.70	316 Stainless Steel
20189594	M6	30.0	4.2	10.5	6.5	4.70	303 Stainless Steel
20189945	M6	30.0	4.2	10.5	6.5	4.70	316 Stainless Steel
20188900	M6	40.0	4.2	10.5	6.5	4.70	303 Stainless Steel
20189259	M6	40.0	4.2	10.5	6.5	4.70	316 Stainless Steel

Captive Screws - Button Head

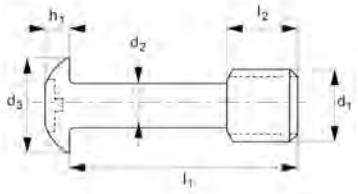



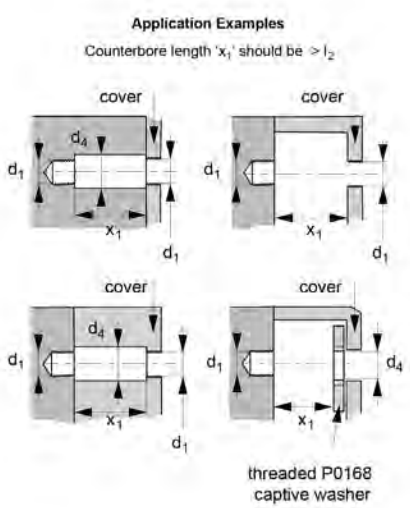



Part Number	d1	l1_025	d2 a012	d3 max	d4 min	h1 max	Material
20189600	M6	40.0	4.2	10.5	6.5	4.70	303 Stainless Steel
20189952	M6	40.0	4.2	10.5	6.5	4.70	316 Stainless Steel
20188917	M6	50.0	4.2	10.5	6.5	4.70	303 Stainless Steel
20189266	M6	50.0	4.2	10.5	6.5	4.70	316 Stainless Steel
20189617	M6	50.0	4.2	10.5	6.5	4.70	303 Stainless Steel
20189969	M6	50.0	4.2	10.5	6.5	4.70	316 Stainless Steel
20188924	M6	60.0	4.2	10.5	6.5	4.70	303 Stainless Steel
20189273	M6	60.0	4.2	10.5	6.5	4.70	316 Stainless Steel
20189624	M6	60.0	4.2	10.5	6.5	4.70	303 Stainless Steel
20189976	M6	60.0	4.2	10.5	6.5	4.70	316 Stainless Steel
20188931	M6	80.0	4.2	10.5	6.5	4.70	303 Stainless Steel
20189280	M6	80.0	4.2	10.5	6.5	4.70	316 Stainless Steel
20189631	M6	80.0	4.2	10.5	6.5	4.70	303 Stainless Steel
20189983	M6	80.0	4.2	10.5	6.5	4.70	316 Stainless Steel

Captive Screws - Cap Head

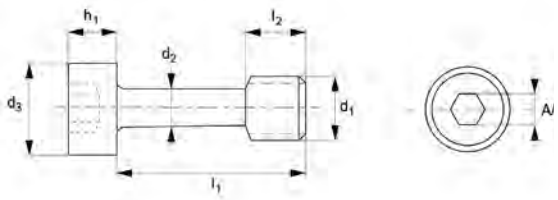

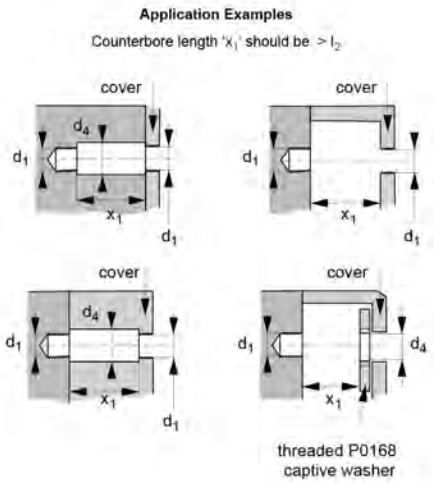



Features

- An ideal fitting solution for panels with non-threaded holes.
- Used to comply with the Machinery Detective 2006/42/EC - generally to ISO 4762.
- The material is a popular choice for construction and automotive applications.

Specifications

Material: Titanium G5, Titanium G2, 316 Stainless Steel, 303 Stainless Steel

This range of Captive Screws feature a cap head with a hexagonal drive. Hexagonal drives are ideal for precision assembly and are ideally used where less surface area is available.

They are an ideal fitting solution for panels with non-threaded holes. They are used to comply with the Machinery Detective 2006/42/EC - generally to ISO 4762. Captive Screws are commonly used with Threaded Captive Washers (sold separately).

These screws are made from Stainless Steel that provides good resistance to corrosion and machinability. You can find a group of screws with a blackened finish and others without. The material is a popular choice for construction and automotive applications.

Please Note: These screws have a smaller shank diameter and should not be tightened to the recommended torque for an equivalent screw of the displayed thread size.

Captive Screws - Cap Head

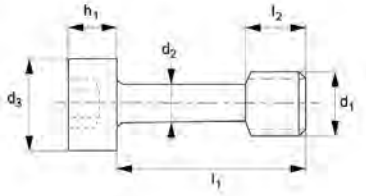

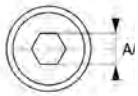

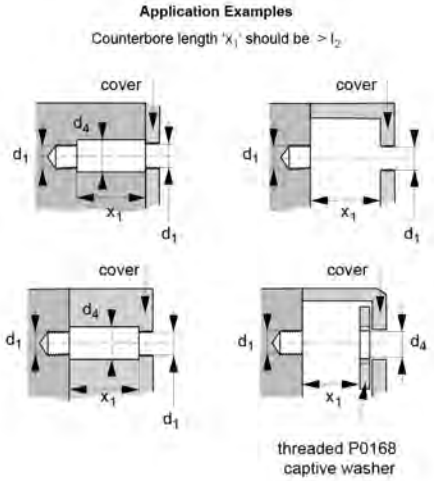



Part Number	d_1	l_1±0.25	d_2 ±0.12	d_3 max.	d_4 min.	h_1 max.	l_2±0.25	Material
20139193	M2.5	5.0	1.8	4.5	2.8	2.5	3.0	303 Stainless Steel
20139209	M2.5	8.0	1.8	4.5	2.8	2.5	3.0	303 Stainless Steel
20139469	M2.5	10.0	1.8	4.5	2.8	2.5	3.0	303 Stainless Steel
20139476	M2.5	12.0	1.8	4.5	2.8	2.5	3.0	303 Stainless Steel
20185367	M2.5	5.0	1.8	4.5	2.8	2.5	3.0	316 Stainless Steel
20182854	M2.5	5.0	1.8	4.5	2.8	2.5	3.0	303 Stainless Steel
20185749	M2.5	5.0	1.8	4.5	2.8	2.5	3.0	316 Stainless Steel
20186524	M2.5	5.0	1.8	4.5	2.8	2.5	3.0	Titanium G2
20187286	M2.5	5.0	1.8	4.5	2.8	2.5	3.0	Titanium G5
20182311	M2.5	8.0	1.8	4.5	2.8	2.5	3.0	316 Stainless Steel
20182236	M2.5	8.0	1.8	4.5	2.8	2.5	3.0	303 Stainless Steel
20183455	M2.5	8.0	1.8	4.5	2.8	2.5	3.0	316 Stainless Steel
20186531	M2.5	8.0	1.8	4.5	2.8	2.5	3.0	Titanium G2
20187293	M2.5	8.0	1.8	4.5	2.8	2.5	3.0	Titanium G5
20181895	M2.5	10.0	1.8	4.5	2.8	2.5	3.0	316 Stainless Steel
20182861	M2.5	10.0	1.8	4.5	2.8	2.5	3.0	303 Stainless Steel
20185756	M2.5	10.0	1.8	4.5	2.8	2.5	3.0	316 Stainless Steel
20186548	M2.5	10.0	1.8	4.5	2.8	2.5	3.0	Titanium G2
20187309	M2.5	10.0	1.8	4.5	2.8	2.5	3.0	Titanium G5
20185374	M2.5	12.0	1.8	4.5	2.8	2.5	3.0	316 Stainless Steel
20182878	M2.5	12.0	1.8	4.5	2.8	2.5	3.0	303 Stainless Steel
20185763	M2.5	12.0	1.8	4.5	2.8	2.5	3.0	316 Stainless Steel

Captive Screws - Cap Head

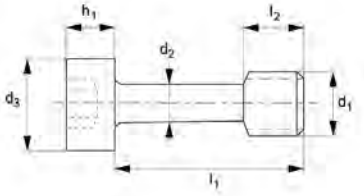

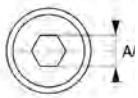

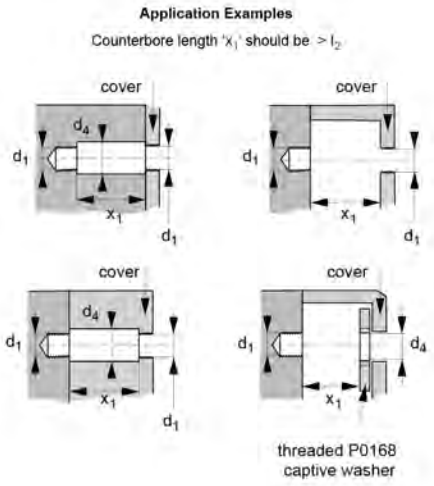



Part Number	d_1	l_1±0.25	d_2 ±0.12	d_3 max.	d_4 min.	h_1 max.	l_2±0.25	Material
20186555	M2.5	12.0	1.8	4.5	2.8	2.5	3.0	Titanium G2
20187316	M2.5	12.0	1.8	4.5	2.8	2.5	3.0	Titanium G5
20137212	M3	10.0	2.0	5.5	3.5	3.0	4.5	303 Stainless Steel
20138264	M3	16.0	2.0	5.5	3.5	3.0	4.5	303 Stainless Steel
20138271	M3	20.0	2.0	5.5	3.5	3.0	4.5	303 Stainless Steel
20138288	M3	25.0	2.0	5.5	3.5	3.0	4.5	303 Stainless Steel
20138295	M3	30.0	2.0	5.5	3.5	3.0	4.5	303 Stainless Steel
20139148	M3	8.0	2.0	5.5	3.5	3.0	4.5	303 Stainless Steel
20139162	M3	12.0	2.0	5.5	3.5	3.0	4.5	303 Stainless Steel
20182250	M3	8.0	2.0	5.5	3.5	3.0	4.5	316 Stainless Steel
20182885	M3	8.0	2.0	5.5	3.5	3.0	4.5	303 Stainless Steel
20183462	M3	8.0	2.0	5.5	3.5	3.0	4.5	316 Stainless Steel
20186562	M3	8.0	2.0	5.5	3.5	3.0	4.5	Titanium G2
20187323	M3	8.0	2.0	5.5	3.5	3.0	4.5	Titanium G5
20182397	M3	10.0	2.0	5.5	3.5	3.0	4.5	316 Stainless Steel
20182892	M3	10.0	2.0	5.5	3.5	3.0	4.5	303 Stainless Steel
20183479	M3	10.0	2.0	5.5	3.5	3.0	4.5	316 Stainless Steel
20186579	M3	10.0	2.0	5.5	3.5	3.0	4.5	Titanium G2
20187330	M3	10.0	2.0	5.5	3.5	3.0	4.5	Titanium G5
20182328	M3	12.0	2.0	5.5	3.5	3.0	4.5	316 Stainless Steel
20182908	M3	12.0	2.0	5.5	3.5	3.0	4.5	303 Stainless Steel
20183486	M3	12.0	2.0	5.5	3.5	3.0	4.5	316 Stainless Steel
20186586	M3	12.0	2.0	5.5	3.5	3.0	4.5	Titanium G2

Captive Screws - Cap Head

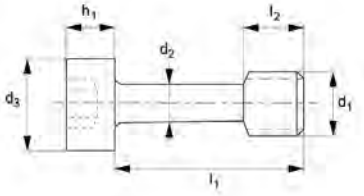

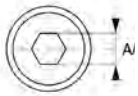

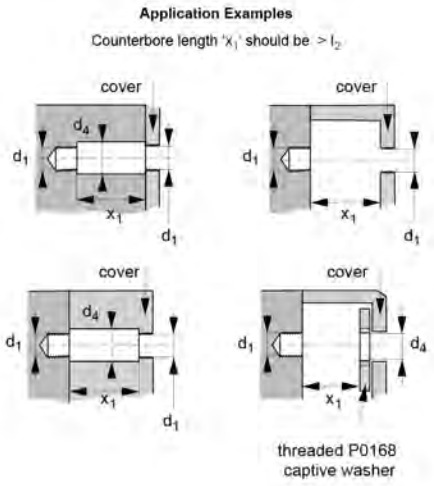



Part Number	d_1	l_1±0.25	d_2 ±0.12	d_3 max.	d_4 min.	h_1 max.	l_2±0.25	Material
20187347	M3	12.0	2.0	5.5	3.5	3.0	4.5	Titanium G5
20180720	M3	16.0	2.0	5.5	3.5	3.0	4.5	316 Stainless Steel
20182915	M3	16.0	2.0	5.5	3.5	3.0	4.5	303 Stainless Steel
20183493	M3	16.0	2.0	5.5	3.5	3.0	4.5	316 Stainless Steel
20186593	M3	16.0	2.0	5.5	3.5	3.0	4.5	Titanium G2
20187354	M3	16.0	2.0	5.5	3.5	3.0	4.5	Titanium G5
20182410	M3	20.0	2.0	5.5	3.5	3.0	4.5	316 Stainless Steel
20182922	M3	20.0	2.0	5.5	3.5	3.0	4.5	303 Stainless Steel
20183509	M3	20.0	2.0	5.5	3.5	3.0	4.5	316 Stainless Steel
20186609	M3	20.0	2.0	5.5	3.5	3.0	4.5	Titanium G2
20187361	M3	20.0	2.0	5.5	3.5	3.0	4.5	Titanium G5
20182380	M3	25.0	2.0	5.5	3.5	3.0	4.5	316 Stainless Steel
20182939	M3	25.0	2.0	5.5	3.5	3.0	4.5	303 Stainless Steel
20183516	M3	25.0	2.0	5.5	3.5	3.0	4.5	316 Stainless Steel
20186043	M3	25.0	2.0	5.5	3.5	3.0	4.5	Titanium G2
20186050	M3	25.0	2.0	5.5	3.5	3.0	4.5	Titanium G5
20182366	M3	30.0	2.0	5.5	3.5	3.0	4.5	316 Stainless Steel
20182946	M3	30.0	2.0	5.5	3.5	3.0	4.5	303 Stainless Steel
20183523	M3	30.0	2.0	5.5	3.5	3.0	4.5	316 Stainless Steel
20186616	M3	30.0	2.0	5.5	3.5	3.0	4.5	Titanium G2
20187378	M3	30.0	2.0	5.5	3.5	3.0	4.5	Titanium G5
20138301	M4	12.0	2.8	7.0	4.5	4.0	6.0	303 Stainless Steel
20138318	M4	20.0	2.8	7.0	4.5	4.0	6.0	303 Stainless Steel

Captive Screws - Cap Head

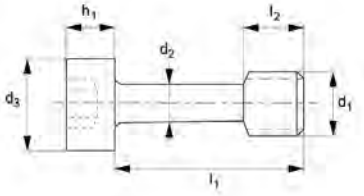

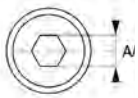

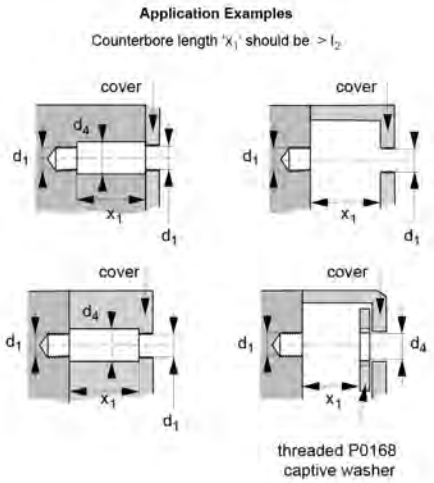



Part Number	d_1	l_1±0.25	d_2 ±0.12	d_3 max.	d_4 min.	h_1 max.	l_2±0.25	Material
20138325	M4	30.0	2.8	7.0	4.5	4.0	6.0	303 Stainless Steel
20138332	M4	50.0	2.8	7.0	4.5	4.0	6.0	303 Stainless Steel
20138929	M4	25.0	2.8	7.0	4.5	4.0	6.0	303 Stainless Steel
20138936	M4	40.0	2.8	7.0	4.5	4.0	6.0	303 Stainless Steel
20140243	M4	10.0	2.8	7.0	4.5	4.0	6.0	303 Stainless Steel
20140441	M4	35.0	2.8	7.0	4.5	4.0	6.0	303 Stainless Steel
20182953	M4	10.0	2.8	7.0	4.5	4.0	6.0	303 Stainless Steel
20182359	M4	12.0	2.8	7.0	4.5	4.0	6.0	316 Stainless Steel
20182960	M4	12.0	2.8	7.0	4.5	4.0	6.0	303 Stainless Steel
20186623	M4	12.0	2.8	7.0	4.5	4.0	6.0	Titanium G2
20187385	M4	12.0	2.8	7.0	4.5	4.0	6.0	Titanium G5
20181826	M4	16.0	2.8	7.0	4.5	4.0	6.0	316 Stainless Steel
20182977	M4	16.0	2.8	7.0	4.5	4.0	6.0	303 Stainless Steel
20183530	M4	16.0	2.8	7.0	4.5	4.0	6.0	316 Stainless Steel
20186630	M4	16.0	2.8	7.0	4.5	4.0	6.0	Titanium G2
20187392	M4	16.0	2.8	7.0	4.5	4.0	6.0	Titanium G5
20182298	M4	20.0	2.8	7.0	4.5	4.0	6.0	316 Stainless Steel
20182984	M4	20.0	2.8	7.0	4.5	4.0	6.0	303 Stainless Steel
20183547	M4	20.0	2.8	7.0	4.5	4.0	6.0	316 Stainless Steel
20186647	M4	20.0	2.8	7.0	4.5	4.0	6.0	Titanium G2
20187408	M4	20.0	2.8	7.0	4.5	4.0	6.0	Titanium G5
20182243	M4	25.0	2.8	7.0	4.5	4.0	6.0	316 Stainless Steel
20182991	M4	25.0	2.8	7.0	4.5	4.0	6.0	303 Stainless Steel

Captive Screws - Cap Head

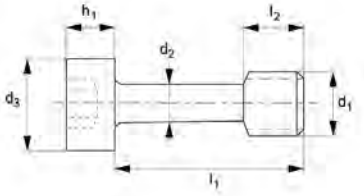

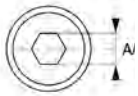

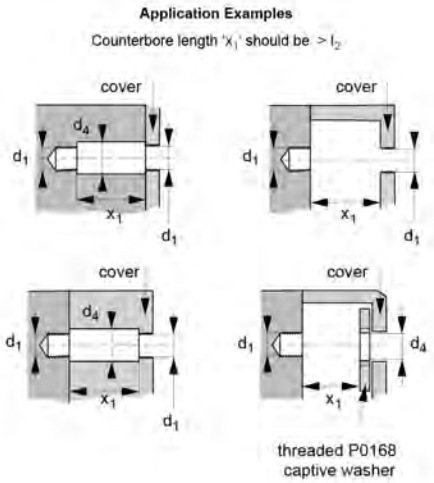



Part Number	d_1	l_1±0.25	d_2 ±0.12	d_3 max.	d_4 min.	h_1 max.	l_2±0.25	Material
20183554	M4	25.0	2.8	7.0	4.5	4.0	6.0	316 Stainless Steel
20186654	M4	25.0	2.8	7.0	4.5	4.0	6.0	Titanium G2
20187415	M4	25.0	2.8	7.0	4.5	4.0	6.0	Titanium G5
20182403	M4	30.0	2.8	7.0	4.5	4.0	6.0	316 Stainless Steel
20183004	M4	30.0	2.8	7.0	4.5	4.0	6.0	303 Stainless Steel
20183561	M4	30.0	2.8	7.0	4.5	4.0	6.0	316 Stainless Steel
20186661	M4	30.0	2.8	7.0	4.5	4.0	6.0	Titanium G2
20187422	M4	30.0	2.8	7.0	4.5	4.0	6.0	Titanium G5
20186203	M4	35.0	2.8	7.0	4.5	4.0	6.0	316 Stainless Steel
20186210	M4	35.0	2.8	7.0	4.5	4.0	6.0	303 Stainless Steel
20186371	M4	35.0	2.8	7.0	4.5	4.0	6.0	316 Stainless Steel
20186678	M4	35.0	2.8	7.0	4.5	4.0	6.0	Titanium G2
20187439	M4	35.0	2.8	7.0	4.5	4.0	6.0	Titanium G5
20185381	M4	40.0	2.8	7.0	4.5	4.0	6.0	316 Stainless Steel
20183011	M4	40.0	2.8	7.0	4.5	4.0	6.0	303 Stainless Steel
20185770	M4	40.0	2.8	7.0	4.5	4.0	6.0	316 Stainless Steel
20186685	M4	40.0	2.8	7.0	4.5	4.0	6.0	Titanium G2
20187446	M4	40.0	2.8	7.0	4.5	4.0	6.0	Titanium G5
20182212	M4	50.0	2.8	7.0	4.5	4.0	6.0	316 Stainless Steel
20183028	M4	50.0	2.8	7.0	4.5	4.0	6.0	303 Stainless Steel
20183578	M4	50.0	2.8	7.0	4.5	4.0	6.0	316 Stainless Steel
20186692	M4	50.0	2.8	7.0	4.5	4.0	6.0	Titanium G2
20187453	M4	50.0	2.8	7.0	4.5	4.0	6.0	Titanium G5

Captive Screws - Cap Head

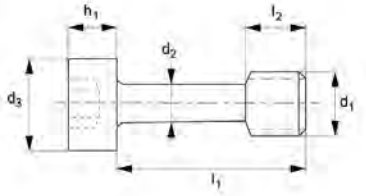

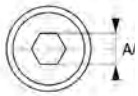

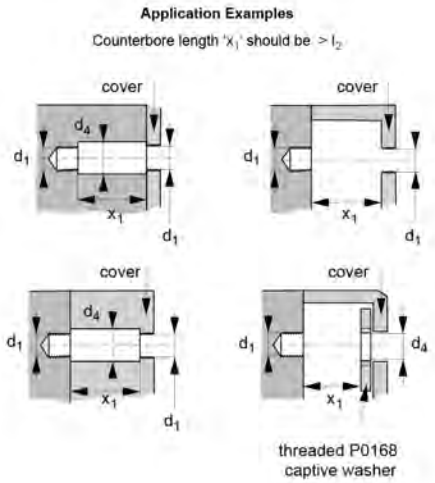



Part Number	d_1	l_1±0.25	d_2 ±0.12	d_3 max.	d_4 min.	h_1 max.	l_2±0.25	Material
20137236	M5	20.0	3.7	8.5	5.5	5.0	7.5	303 Stainless Steel
20137243	M5	16.0	3.7	8.5	5.5	5.0	7.5	303 Stainless Steel
20138349	M5	12.0	3.7	8.5	5.5	5.0	7.5	303 Stainless Steel
20138356	M5	30.0	3.7	8.5	5.5	5.0	7.5	303 Stainless Steel
20138363	M5	40.0	3.7	8.5	5.5	5.0	7.5	303 Stainless Steel
20138370	M5	50.0	3.7	8.5	5.5	5.0	7.5	303 Stainless Steel
20138943	M5	25.0	3.7	8.5	5.5	5.0	7.5	303 Stainless Steel
20140397	M5	35.0	3.7	8.5	5.5	5.0	7.5	303 Stainless Steel
20185398	M5	12.0	3.7	8.5	5.5	5.0	7.5	316 Stainless Steel
20183035	M5	12.0	3.7	8.5	5.5	5.0	7.5	303 Stainless Steel
20185787	M5	12.0	3.7	8.5	5.5	5.0	7.5	316 Stainless Steel
20186708	M5	12.0	3.7	8.5	5.5	5.0	7.5	Titanium G2
20187460	M5	12.0	3.7	8.5	5.5	5.0	7.5	Titanium G5
20182274	M5	16.0	3.7	8.5	5.5	5.0	7.5	316 Stainless Steel
20183042	M5	16.0	3.7	8.5	5.5	5.0	7.5	303 Stainless Steel
20183585	M5	16.0	3.7	8.5	5.5	5.0	7.5	316 Stainless Steel
20186715	M5	16.0	3.7	8.5	5.5	5.0	7.5	Titanium G2
20187477	M5	16.0	3.7	8.5	5.5	5.0	7.5	Titanium G5
20181765	M5	20.0	3.7	8.5	5.5	5.0	7.5	316 Stainless Steel
20183059	M5	20.0	3.7	8.5	5.5	5.0	7.5	303 Stainless Steel
20183592	M5	20.0	3.7	8.5	5.5	5.0	7.5	316 Stainless Steel
20186722	M5	20.0	3.7	8.5	5.5	5.0	7.5	Titanium G2
20187484	M5	20.0	3.7	8.5	5.5	5.0	7.5	Titanium G5

Captive Screws - Cap Head

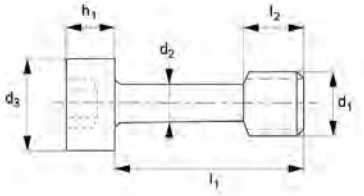

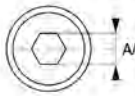

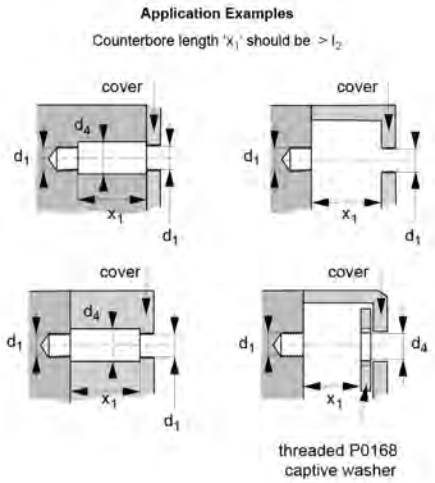



Part Number	d_1	l_1±0.25	d_2 ±0.12	d_3 max.	d_4 min.	h_1 max.	l_2±0.25	Material
20181871	M5	25.0	3.7	8.5	5.5	5.0	7.5	316 Stainless Steel
20183066	M5	25.0	3.7	8.5	5.5	5.0	7.5	303 Stainless Steel
20183608	M5	25.0	3.7	8.5	5.5	5.0	7.5	316 Stainless Steel
20186739	M5	25.0	3.7	8.5	5.5	5.0	7.5	Titanium G2
20187491	M5	25.0	3.7	8.5	5.5	5.0	7.5	Titanium G5
20181888	M5	30.0	3.7	8.5	5.5	5.0	7.5	316 Stainless Steel
20183073	M5	30.0	3.7	8.5	5.5	5.0	7.5	303 Stainless Steel
20183615	M5	30.0	3.7	8.5	5.5	5.0	7.5	316 Stainless Steel
20186746	M5	30.0	3.7	8.5	5.5	5.0	7.5	Titanium G2
20187507	M5	30.0	3.7	8.5	5.5	5.0	7.5	Titanium G5
20181833	M5	35.0	3.7	8.5	5.5	5.0	7.5	316 Stainless Steel
20186227	M5	35.0	3.7	8.5	5.5	5.0	7.5	303 Stainless Steel
20183622	M5	35.0	3.7	8.5	5.5	5.0	7.5	316 Stainless Steel
20186753	M5	35.0	3.7	8.5	5.5	5.0	7.5	Titanium G2
20187514	M5	35.0	3.7	8.5	5.5	5.0	7.5	Titanium G5
20185404	M5	40.0	3.7	8.5	5.5	5.0	7.5	316 Stainless Steel
20183080	M5	40.0	3.7	8.5	5.5	5.0	7.5	303 Stainless Steel
20185794	M5	40.0	3.7	8.5	5.5	5.0	7.5	316 Stainless Steel
20186760	M5	40.0	3.7	8.5	5.5	5.0	7.5	Titanium G2
20187521	M5	40.0	3.7	8.5	5.5	5.0	7.5	Titanium G5
20185411	M5	50.0	3.7	8.5	5.5	5.0	7.5	316 Stainless Steel
20183097	M5	50.0	3.7	8.5	5.5	5.0	7.5	303 Stainless Steel
20185800	M5	50.0	3.7	8.5	5.5	5.0	7.5	316 Stainless Steel

Captive Screws - Cap Head

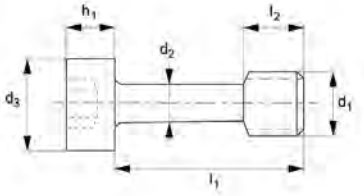

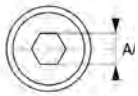

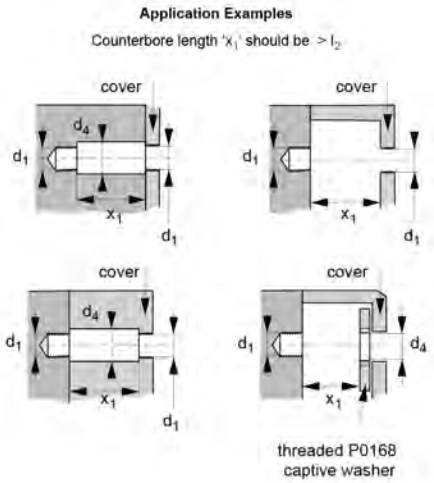



Part Number	d_1	l_1±0.25	d_2 ±0.12	d_3 max.	d_4 min.	h_1 max.	l_2±0.25	Material
20186777	M5	50.0	3.7	8.5	5.5	5.0	7.5	Titanium G2
20187538	M5	50.0	3.7	8.5	5.5	5.0	7.5	Titanium G5
20137151	M6	30.0	4.2	10.0	6.5	6.0	7.5	303 Stainless Steel
20137168	M6	12.0	4.2	10.0	6.5	6.0	7.5	303 Stainless Steel
20137175	M6	16.0	4.2	10.0	6.5	6.0	7.5	303 Stainless Steel
20137182	M6	16.0	2.8	7.0	4.5	4.0	6.0	303 Stainless Steel
20137229	M6	20.0	4.2	10.0	6.5	6.0	7.5	303 Stainless Steel
20138240	M6	40.0	4.2	10.0	6.5	6.0	7.5	303 Stainless Steel
20138387	M6	50.0	4.2	10.0	6.5	6.0	7.5	303 Stainless Steel
20138394	M6	60.0	4.2	10.0	6.5	6.0	7.5	303 Stainless Steel
20138400	M6	80.0	4.2	10.0	6.5	6.0	7.5	303 Stainless Steel
20138851	M6	25.0	4.2	10.0	6.5	6.0	7.5	303 Stainless Steel
20140458	M6	35.0	4.2	10.0	6.5	6.0	7.5	303 Stainless Steel
20180188	M6	12.0	4.2	10.0	6.5	6.0	7.5	316 Stainless Steel
20183103	M6	12.0	4.2	10.0	6.5	6.0	7.5	303 Stainless Steel
20183639	M6	12.0	4.2	10.0	6.5	6.0	7.5	316 Stainless Steel
20186784	M6	12.0	4.2	10.0	6.5	6.0	7.5	Titanium G2
20187545	M6	12.0	4.2	10.0	6.5	6.0	7.5	Titanium G5
20181802	M6	16.0	4.2	10.0	6.5	6.0	7.5	316 Stainless Steel
20183110	M6	16.0	4.2	10.0	6.5	6.0	7.5	303 Stainless Steel
20183646	M6	16.0	4.2	10.0	6.5	6.0	7.5	316 Stainless Steel
20186791	M6	16.0	4.2	10.0	6.5	6.0	7.5	Titanium G2
20187552	M6	16.0	4.2	10.0	6.5	6.0	7.5	Titanium G5

Captive Screws - Cap Head

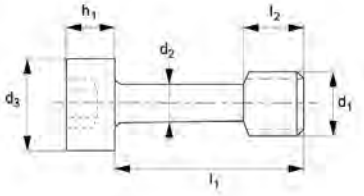

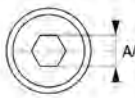

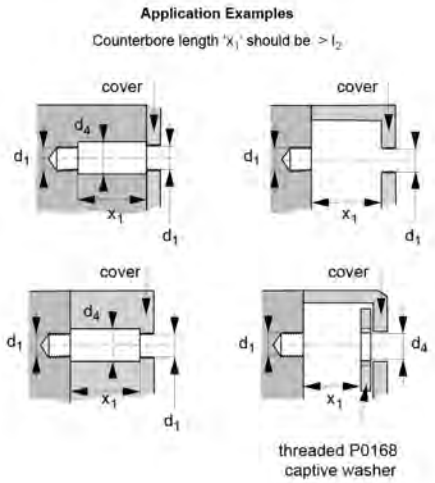



Part Number	d_1	l_1±0.25	d_2 ±0.12	d_3 max.	d_4 min.	h_1 max.	l_2±0.25	Material
20182267	M6	20.0	4.2	10.0	6.5	6.0	7.5	316 Stainless Steel
20182373	M6	20.0	4.2	10.0	6.5	6.0	7.5	303 Stainless Steel
20183653	M6	20.0	4.2	10.0	6.5	6.0	7.5	316 Stainless Steel
20186807	M6	20.0	4.2	10.0	6.5	6.0	7.5	Titanium G2
20187569	M6	20.0	4.2	10.0	6.5	6.0	7.5	Titanium G5
20182175	M6	25.0	4.2	10.0	6.5	6.0	7.5	316 Stainless Steel
20183127	M6	25.0	4.2	10.0	6.5	6.0	7.5	303 Stainless Steel
20183660	M6	25.0	4.2	10.0	6.5	6.0	7.5	316 Stainless Steel
20186814	M6	25.0	4.2	10.0	6.5	6.0	7.5	Titanium G2
20187576	M6	25.0	4.2	10.0	6.5	6.0	7.5	Titanium G5
20181789	M6	30.0	4.2	10.0	6.5	6.0	7.5	316 Stainless Steel
20183134	M6	30.0	4.2	10.0	6.5	6.0	7.5	303 Stainless Steel
20183677	M6	30.0	4.2	10.0	6.5	6.0	7.5	316 Stainless Steel
20186821	M6	30.0	4.2	10.0	6.5	6.0	7.5	Titanium G2
20187583	M6	30.0	4.2	10.0	6.5	6.0	7.5	Titanium G5
20186098	M6	35.0	4.2	10.0	6.5	6.0	7.5	316 Stainless Steel
20186234	M6	35.0	4.2	10.0	6.5	6.0	7.5	303 Stainless Steel
20186388	M6	35.0	4.2	10.0	6.5	6.0	7.5	316 Stainless Steel
20186838	M6	35.0	4.2	10.0	6.5	6.0	7.5	Titanium G2
20187590	M6	35.0	4.2	10.0	6.5	6.0	7.5	Titanium G5
20181857	M6	40.0	4.2	10.0	6.5	6.0	7.5	316 Stainless Steel
20183141	M6	40.0	4.2	10.0	6.5	6.0	7.5	303 Stainless Steel
20183684	M6	40.0	4.2	10.0	6.5	6.0	7.5	316 Stainless Steel

Captive Screws - Cap Head

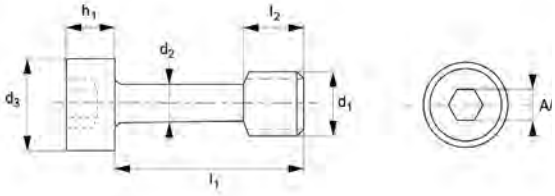

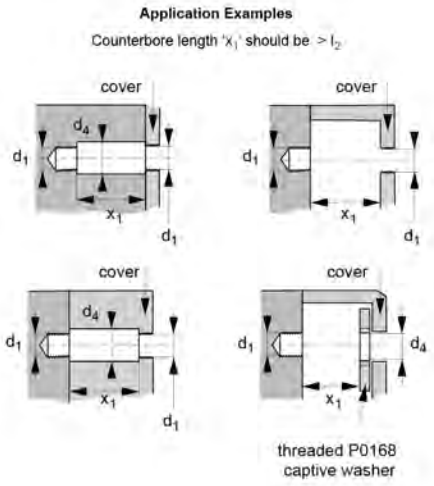



Part Number	d_1	l_1±0.25	d_2 ±0.12	d_3 max.	d_4 min.	h_1 max.	l_2±0.25	Material
20186845	M6	40.0	4.2	10.0	6.5	6.0	7.5	Titanium G2
20187606	M6	40.0	4.2	10.0	6.5	6.0	7.5	Titanium G5
20181864	M6	50.0	4.2	10.0	6.5	6.0	7.5	316 Stainless Steel
20183158	M6	50.0	4.2	10.0	6.5	6.0	7.5	303 Stainless Steel
20183691	M6	50.0	4.2	10.0	6.5	6.0	7.5	316 Stainless Steel
20186852	M6	50.0	4.2	10.0	6.5	6.0	7.5	Titanium G2
20187613	M6	50.0	4.2	10.0	6.5	6.0	7.5	Titanium G5
20185428	M6	60.0	4.2	10.0	6.5	6.0	7.5	316 Stainless Steel
20183165	M6	60.0	4.2	10.0	6.5	6.0	7.5	303 Stainless Steel
20185817	M6	60.0	4.2	10.0	6.5	6.0	7.5	316 Stainless Steel
20186869	M6	60.0	4.2	10.0	6.5	6.0	7.5	Titanium G2
20187620	M6	60.0	4.2	10.0	6.5	6.0	7.5	Titanium G5
20185435	M6	80.0	4.2	10.0	6.5	6.0	7.5	316 Stainless Steel
20183172	M6	80.0	4.2	10.0	6.5	6.0	7.5	303 Stainless Steel
20185824	M6	80.0	4.2	10.0	6.5	6.0	7.5	316 Stainless Steel
20186876	M6	80.0	4.2	10.0	6.5	6.0	7.5	Titanium G2
20187637	M6	80.0	4.2	10.0	6.5	6.0	7.5	Titanium G5
20137199	M8	30.0	6.0	13.0	8.5	8.0	10.0	303 Stainless Steel
20137250	M8	20.0	6.0	13.0	8.5	8.0	10.0	303 Stainless Steel
20138417	M8	16.0	6.0	13.0	8.5	8.0	10.0	303 Stainless Steel
20138424	M8	40.0	6.0	13.0	8.5	8.0	10.0	303 Stainless Steel
20138431	M8	50.0	6.0	13.0	8.5	8.0	10.0	303 Stainless Steel
20138448	M8	60.0	6.0	13.0	8.5	8.0	10.0	303 Stainless Steel

Captive Screws - Cap Head

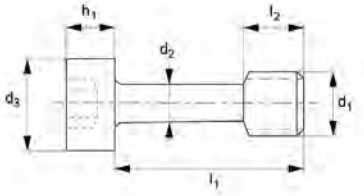

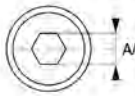

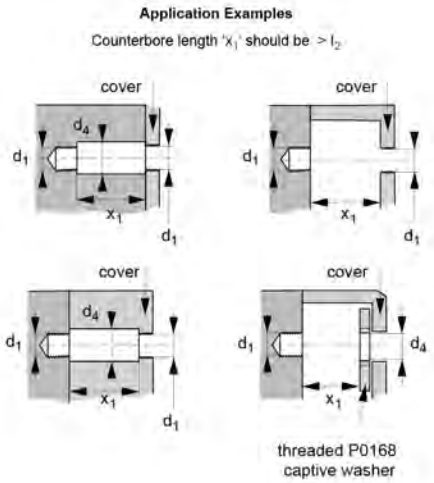



Part Number	d_1	l_1±0.25	d_2 ±0.12	d_3 max.	d_4 min.	h_1 max.	l_2±0.25	Material
20138455	M8	80.0	6.0	13.0	8.5	8.9	10.0	303 Stainless Steel
20138950	M8	25.0	6.0	13.0	8.5	8.0	10.0	303 Stainless Steel
20138967	M8	35.0	6.0	13.0	8.5	8.0	10.0	303 Stainless Steel
20138974	M8	45.0	6.0	13.0	8.5	8.0	10.0	303 Stainless Steel
20185343	M8	16.0	6.0	13.0	8.5	8.0	10.0	316 Stainless Steel
20183189	M8	16.0	6.0	13.0	8.5	8.0	10.0	303 Stainless Steel
20185831	M8	16.0	6.0	13.0	8.5	8.0	10.0	316 Stainless Steel
20186883	M8	16.0	6.0	13.0	8.5	8.0	10.0	Titanium G2
20187644	M8	16.0	6.0	13.0	8.5	8.0	10.0	Titanium G5
20182427	M8	20.0	6.0	13.0	8.5	8.0	10.0	316 Stainless Steel
20183196	M8	20.0	6.0	13.0	8.5	8.0	10.0	303 Stainless Steel
20185848	M8	20.0	6.0	13.0	8.5	8.0	10.0	316 Stainless Steel
20186890	M8	20.0	6.0	13.0	8.5	8.0	10.0	Titanium G2
20187651	M8	20.0	6.0	13.0	8.5	8.0	10.0	Titanium G5
20182342	M8	25.0	6.0	13.0	8.5	8.0	10.0	316 Stainless Steel
20183202	M8	25.0	6.0	13.0	8.5	8.0	10.0	303 Stainless Steel
20183707	M8	25.0	6.0	13.0	8.5	8.0	10.0	316 Stainless Steel
20186906	M8	25.0	6.0	13.0	8.5	8.0	10.0	Titanium G2
20187668	M8	25.0	6.0	13.0	8.5	8.0	10.0	Titanium G5
20182335	M8	30.0	6.0	13.0	8.5	8.0	10.0	316 Stainless Steel
20183219	M8	30.0	6.0	13.0	8.5	8.0	10.0	303 Stainless Steel
20182281	M8	30.0	6.0	13.0	8.5	8.0	10.0	316 Stainless Steel
20186913	M8	30.0	6.0	13.0	8.5	8.0	10.0	Titanium G2

Captive Screws - Cap Head

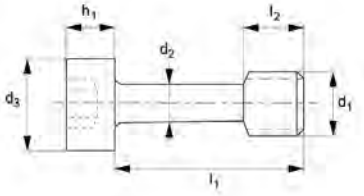

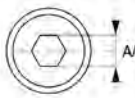

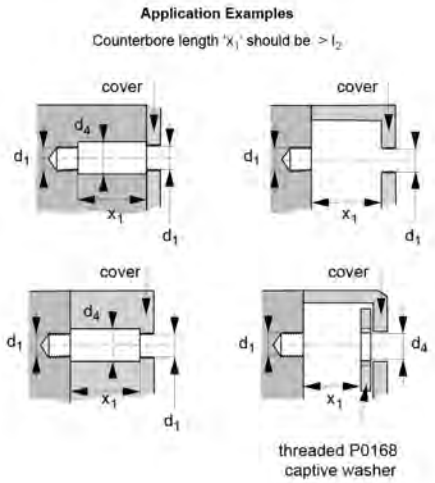



Part Number	d_1	l_1±0.25	d_2 ±0.12	d_3 max.	d_4 min.	h_1 max.	l_2±0.25	Material
20187675	M8	30.0	6.0	13.0	8.5	8.0	10.0	Titanium G5
20185442	M8	35.0	6.0	13.0	8.5	8.0	10.0	316 Stainless Steel
20183226	M8	35.0	6.0	13.0	8.5	8.0	10.0	303 Stainless Steel
20185855	M8	35.0	6.0	13.0	8.5	8.0	10.0	316 Stainless Steel
20186920	M8	35.0	6.0	13.0	8.5	8.0	10.0	Titanium G2
20187682	M8	35.0	6.0	13.0	8.5	8.0	10.0	Titanium G5
20181772	M8	40.0	6.0	13.0	8.5	8.0	10.0	316 Stainless Steel
20183233	M8	40.0	6.0	13.0	8.5	8.0	10.0	303 Stainless Steel
20183714	M8	40.0	6.0	13.0	8.5	8.0	10.0	316 Stainless Steel
20186937	M8	40.0	6.0	13.0	8.5	8.0	10.0	Titanium G2
20187699	M8	40.0	6.0	13.0	8.5	8.0	10.0	Titanium G5
20181819	M8	45.0	6.0	13.0	8.5	8.0	10.0	316 Stainless Steel
20183240	M8	45.0	6.0	13.0	8.5	8.0	10.0	303 Stainless Steel
20183721	M8	45.0	6.0	13.0	8.5	8.0	10.0	316 Stainless Steel
20186944	M8	45.0	6.0	13.0	8.5	8.0	10.0	Titanium G2
20187705	M8	45.0	6.0	13.0	8.5	8.0	10.0	Titanium G5
20185459	M8	50.0	6.0	13.0	8.5	8.0	10.0	316 Stainless Steel
20183257	M8	50.0	6.0	13.0	8.5	8.0	10.0	303 Stainless Steel
20185862	M8	50.0	6.0	13.0	8.5	8.0	10.0	316 Stainless Steel
20186951	M8	50.0	6.0	13.0	8.5	8.0	10.0	Titanium G2
20187712	M8	50.0	6.0	13.0	8.5	8.0	10.0	Titanium G5
20185466	M8	60.0	6.0	13.0	8.5	8.0	10.0	316 Stainless Steel
20183264	M8	60.0	6.0	13.0	8.5	8.0	10.0	303 Stainless Steel

Captive Screws - Cap Head

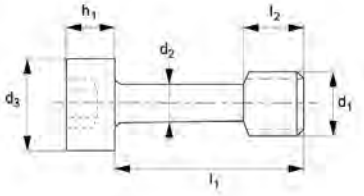

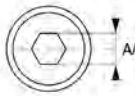

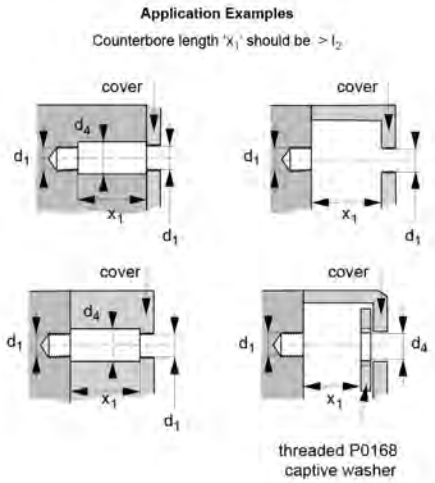



Part Number	d_1	l_1±0.25	d_2 ±0.12	d_3 max.	d_4 min.	h_1 max.	l_2±0.25	Material
20185879	M8	60.0	6.0	13.0	8.5	8.0	10.0	316 Stainless Steel
20186968	M8	60.0	6.0	13.0	8.5	8.0	10.0	Titanium G2
20187729	M8	60.0	6.0	13.0	8.5	8.0	10.0	Titanium G5
20185473	M8	80.0	6.0	13.0	8.5	8.0	10.0	316 Stainless Steel
20183271	M8	80.0	6.0	13.0	8.5	8.0	10.0	303 Stainless Steel
20185886	M8	80.0	6.0	13.0	8.5	8.0	10.0	316 Stainless Steel
20186975	M8	80.0	6.0	13.0	8.5	8.0	10.0	Titanium G2
20187736	M8	80.0	6.0	13.0	8.5	8.0	10.0	Titanium G5
20138462	M10	20.0	7.5	16.0	10.6	10.0	12.5	303 Stainless Steel
20138479	M10	25.0	7.5	16.0	10.6	10.0	12.5	303 Stainless Steel
20138486	M10	30.0	7.5	16.0	10.6	10.0	12.5	303 Stainless Steel
20138493	M10	35.0	7.5	16.0	10.6	10.0	12.5	303 Stainless Steel
20138509	M10	40.0	7.5	16.0	10.6	10.0	12.5	303 Stainless Steel
20138516	M10	45.0	7.5	16.0	10.6	10.0	12.5	303 Stainless Steel
20138523	M10	50.0	7.5	16.0	10.6	10.0	12.5	303 Stainless Steel
20138530	M10	60.0	7.5	16.0	10.6	10.0	12.5	303 Stainless Steel
20138547	M10	80.0	7.5	16.0	10.6	10.0	12.5	303 Stainless Steel
20185480	M10	20.0	7.5	16.0	10.6	10.0	12.5	316 Stainless Steel
20183288	M10	20.0	7.5	16.0	10.6	10.0	12.5	303 Stainless Steel
20185893	M10	20.0	7.5	16.0	10.6	10.0	12.5	316 Stainless Steel
20186982	M10	20.0	7.5	16.0	10.6	10.0	12.5	Titanium G2
20187743	M10	20.0	7.5	16.0	10.6	10.0	12.5	Titanium G5
20185497	M10	25.0	7.5	16.0	10.6	10.0	12.5	316 Stainless Steel

Captive Screws - Cap Head

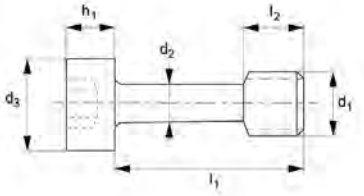

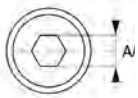

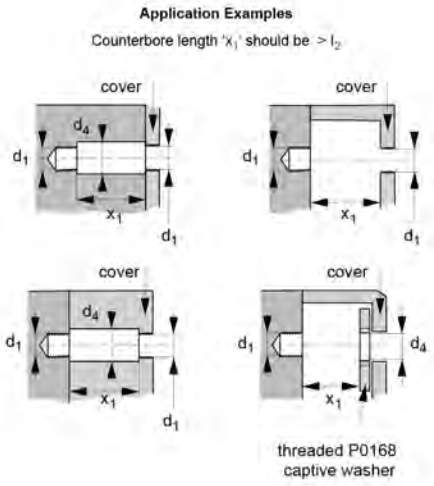



Part Number	d_1	l_1±0.25	d_2 ±0.12	d_3 max.	d_4 min.	h_1 max.	l_2±0.25	Material
20183295	M10	25.0	7.5	16.0	10.6	10.0	12.5	303 Stainless Steel
20185909	M10	25.0	7.5	16.0	10.6	10.0	12.5	316 Stainless Steel
20186999	M10	25.0	7.5	16.0	10.6	10.0	12.5	Titanium G2
20187750	M10	25.0	7.5	16.0	10.6	10.0	12.5	Titanium G5
20185350	M10	30.0	7.5	16.0	10.6	10.0	12.5	316 Stainless Steel
20183301	M10	30.0	7.5	16.0	10.6	10.0	12.5	303 Stainless Steel
20185916	M10	30.0	7.5	16.0	10.6	10.0	12.5	316 Stainless Steel
20187002	M10	30.0	7.5	16.0	10.6	10.0	12.5	Titanium G2
20187767	M10	30.0	7.5	16.0	10.6	10.0	12.5	Titanium G5
20182205	M10	35.0	7.5	16.0	10.6	10.0	12.5	316 Stainless Steel
20183318	M10	35.0	7.5	16.0	10.6	10.0	12.5	303 Stainless Steel
20183738	M10	35.0	7.5	16.0	10.6	10.0	12.5	316 Stainless Steel
20187019	M10	35.0	7.5	16.0	10.6	10.0	12.5	Titanium G2
20186067	M10	35.0	7.5	16.0	10.6	10.0	12.5	Titanium G5
20181796	M10	40.0	7.5	16.0	10.6	10.0	12.5	316 Stainless Steel
20183325	M10	40.0	7.5	16.0	10.6	10.0	12.5	303 Stainless Steel
20183745	M10	40.0	7.5	16.0	10.6	10.0	12.5	316 Stainless Steel
20187026	M10	40.0	7.5	16.0	10.6	10.0	12.5	Titanium G2
20187774	M10	40.0	7.5	16.0	10.6	10.0	12.5	Titanium G5
20185503	M10	45.0	7.5	16.0	10.6	10.0	12.5	316 Stainless Steel
20183332	M10	45.0	7.5	16.0	10.6	10.0	12.5	303 Stainless Steel
20185923	M10	45.0	7.5	16.0	10.6	10.0	12.5	316 Stainless Steel
20187033	M10	45.0	7.5	16.0	10.6	10.0	12.5	Titanium G2

Captive Screws - Cap Head

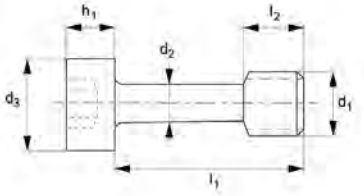

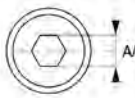

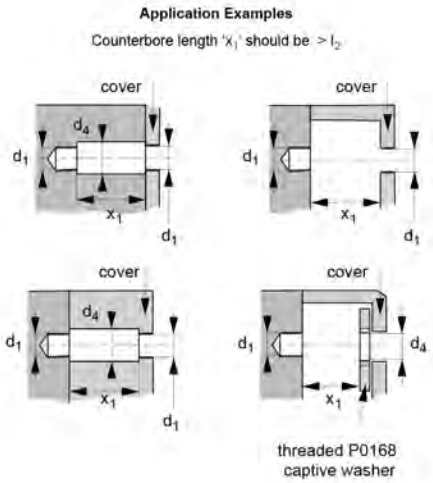



Part Number	d_1	l_1±0.25	d_2 ±0.12	d_3 max.	d_4 min.	h_1 max.	l_2±0.25	Material
20187781	M10	45.0	7.5	16.0	10.6	10.0	12.5	Titanium G5
20185510	M10	50.0	7.5	16.0	10.6	10.0	12.5	316 Stainless Steel
20183349	M10	50.0	7.5	16.0	10.6	10.0	12.5	303 Stainless Steel
20185930	M10	50.0	7.5	16.0	10.6	10.0	12.5	316 Stainless Steel
20187040	M10	50.0	7.5	16.0	10.6	10.0	12.5	Titanium G2
20187798	M10	50.0	7.5	16.0	10.6	10.0	12.5	Titanium G5
20185527	M10	60.0	7.5	16.0	10.6	10.0	12.5	316 Stainless Steel
20183356	M10	60.0	7.5	16.0	10.6	10.0	12.5	303 Stainless Steel
20185947	M10	60.0	7.5	16.0	10.6	10.0	12.5	316 Stainless Steel
20187057	M10	60.0	7.5	16.0	10.6	10.0	12.5	Titanium G2
20187804	M10	60.0	7.5	16.0	10.6	10.0	12.5	Titanium G5
20185534	M10	80.0	7.5	16.0	10.6	10.0	12.5	316 Stainless Steel
20183363	M10	80.0	7.5	16.0	10.6	10.0	12.5	303 Stainless Steel
20185954	M10	80.0	7.5	16.0	10.6	10.0	12.5	316 Stainless Steel
20187064	M10	80.0	7.5	16.0	10.6	10.0	12.5	Titanium G2
20187811	M10	80.0	7.5	16.0	10.6	10.0	12.5	Titanium G5
20138554	M12	25.0	8.0	18.0	13.2	12.0	15.0	303 Stainless Steel
20138561	M12	30.0	8.0	18.0	13.2	12.0	15.0	303 Stainless Steel
20138578	M12	35.0	8.0	18.0	13.2	12.0	15.0	303 Stainless Steel
20138585	M12	40.0	8.0	18.0	13.2	12.0	15.0	303 Stainless Steel
20138592	M12	45.0	8.0	18.0	13.2	12.0	15.0	303 Stainless Steel
20138608	M12	50.0	8.0	18.0	13.2	12.0	15.0	303 Stainless Steel
20138615	M12	60.0	8.0	18.0	13.2	12.0	15.0	303 Stainless Steel

Captive Screws - Cap Head

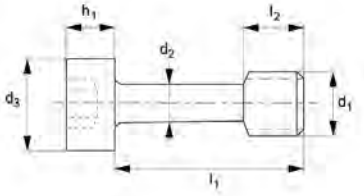

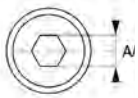

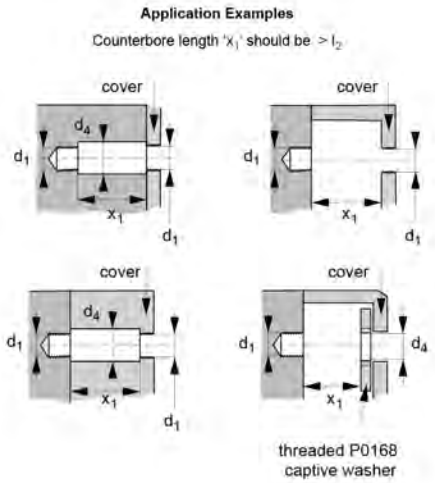



Part Number	d_1	l_1±0.25	d_2 ±0.12	d_3 max.	d_4 min.	h_1 max.	l_2±0.25	Material
20138622	M12	80.0	8.0	18.0	13.2	12.0	15.0	303 Stainless Steel
20185541	M12	25.0	8.0	18.0	13.2	12.0	15.0	316 Stainless Steel
20183370	M12	25.0	8.0	18.0	13.2	12.0	15.0	303 Stainless Steel
20185961	M12	25.0	8.0	18.0	13.2	12.0	15.0	316 Stainless Steel
20187071	M12	25.0	8.0	18.0	13.2	12.0	15.0	Titanium G2
20187828	M12	25.0	8.0	18.0	13.2	12.0	15.0	Titanium G5
20182434	M12	30.0	8.0	18.0	13.2	12.0	15.0	316 Stainless Steel
20183387	M12	30.0	8.0	18.0	13.2	12.0	15.0	303 Stainless Steel
20185978	M12	30.0	8.0	18.0	13.2	12.0	15.0	316 Stainless Steel
20187088	M12	30.0	8.0	18.0	13.2	12.0	15.0	Titanium G2
20187835	M12	30.0	8.0	18.0	13.2	12.0	15.0	Titanium G5
20185558	M12	35.0	8.0	18.0	13.2	12.0	15.0	316 Stainless Steel
20183394	M12	35.0	8.0	18.0	13.2	12.0	15.0	303 Stainless Steel
20185985	M12	35.0	8.0	18.0	13.2	12.0	15.0	316 Stainless Steel
20187095	M12	35.0	8.0	18.0	13.2	12.0	15.0	Titanium G2
20187842	M12	35.0	8.0	18.0	13.2	12.0	15.0	Titanium G5
20185565	M12	40.0	8.0	18.0	13.2	12.0	15.0	316 Stainless Steel
20183400	M12	40.0	8.0	18.0	13.2	12.0	15.0	303 Stainless Steel
20185992	M12	40.0	8.0	18.0	13.2	12.0	15.0	316 Stainless Steel
20187101	M12	40.0	8.0	18.0	13.2	12.0	15.0	Titanium G2
20187859	M12	40.0	8.0	18.0	13.2	12.0	15.0	Titanium G5
20185572	M12	45.0	8.0	18.0	13.2	12.0	15.0	316 Stainless Steel
20183417	M12	45.0	8.0	18.0	13.2	12.0	15.0	303 Stainless Steel

Captive Screws - Cap Head

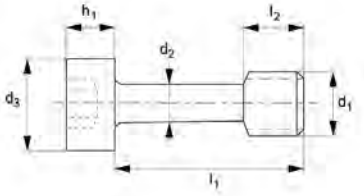

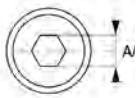

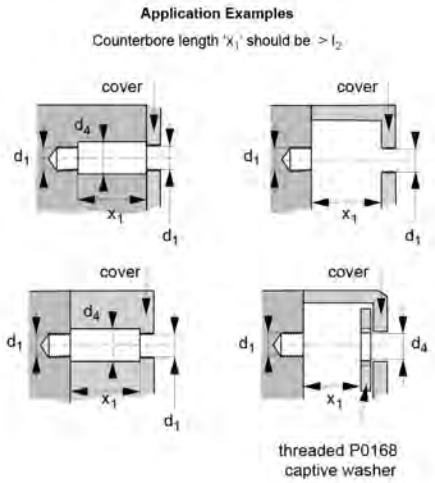



Part Number	d_1	l_1±0.25	d_2 ±0.12	d_3 max.	d_4 min.	h_1 max.	l_2±0.25	Material
20186005	M12	45.0	8.0	18.0	13.2	12.0	15.0	316 Stainless Steel
20187118	M12	45.0	8.0	18.0	13.2	12.0	15.0	Titanium G2
20187866	M12	45.0	8.0	18.0	13.2	12.0	15.0	Titanium G5
20185589	M12	50.0	8.0	18.0	13.2	12.0	15.0	316 Stainless Steel
20183424	M12	50.0	8.0	18.0	13.2	12.0	15.0	303 Stainless Steel
20186012	M12	50.0	8.0	18.0	13.2	12.0	15.0	316 Stainless Steel
20187125	M12	50.0	8.0	18.0	13.2	12.0	15.0	Titanium G2
20187873	M12	50.0	8.0	18.0	13.2	12.0	15.0	Titanium G5
20185596	M12	60.0	8.0	18.0	13.2	12.0	15.0	316 Stainless Steel
20183431	M12	60.0	8.0	18.0	13.2	12.0	15.0	303 Stainless Steel
20186029	M12	60.0	8.0	18.0	13.2	12.0	15.0	316 Stainless Steel
20187132	M12	60.0	8.0	18.0	13.2	12.0	15.0	Titanium G2
20187880	M12	60.0	8.0	18.0	13.2	12.0	15.0	Titanium G5
20185602	M12	80.0	8.0	18.0	13.2	12.0	15.0	316 Stainless Steel
20183448	M12	80.0	8.0	18.0	13.2	12.0	15.0	303 Stainless Steel
20186036	M12	80.0	8.0	18.0	13.2	12.0	15.0	316 Stainless Steel
20187149	M12	80.0	8.0	18.0	13.2	12.0	15.0	Titanium G2
20187897	M12	80.0	8.0	18.0	13.2	12.0	15.0	Titanium G5
20140267	M16	30.0	12.0	24.0	17.5	16.0	20.0	303 Stainless Steel
20140274	M16	35.0	12.0	24.0	17.5	16.0	20.0	303 Stainless Steel
20140281	M16	40.0	12.0	24.0	17.5	16.0	20.0	303 Stainless Steel
20140298	M16	45.0	12.0	24.0	17.5	16.0	20.0	303 Stainless Steel
20140304	M16	50.0	12.0	24.0	17.5	16.0	20.0	303 Stainless Steel

Captive Screws - Cap Head

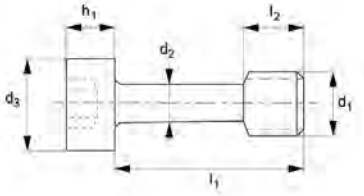

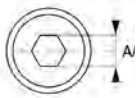

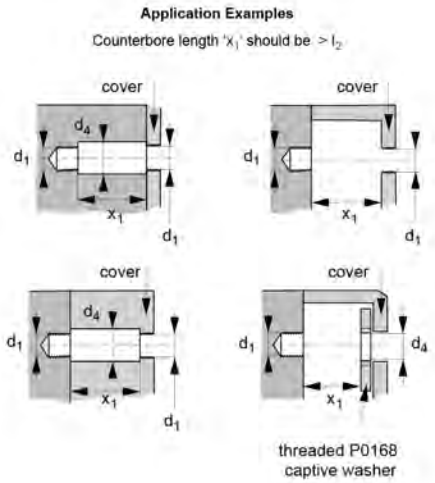



Part Number	d_1	l_1±0.25	d_2 ±0.12	d_3 max.	d_4 min.	h_1 max.	l_2±0.25	Material
20140311	M16	60.0	12.0	24.0	17.5	16.0	20.0	303 Stainless Steel
20140328	M16	80.0	12.0	24.0	17.5	16.0	20.0	303 Stainless Steel
20140335	M16	100.0	12.0	24.0	17.5	16.0	20.0	303 Stainless Steel
20185619	M16	30.0	12.0	24.0	17.5	16.0	20.0	316 Stainless Steel
20186241	M16	30.0	12.0	24.0	17.5	16.0	20.0	303 Stainless Steel
20186395	M16	30.0	12.0	24.0	17.5	16.0	20.0	316 Stainless Steel
20187156	M16	30.0	12.0	24.0	17.5	16.0	20.0	Titanium G2
20187903	M16	30.0	12.0	24.0	17.5	16.0	20.0	Titanium G5
20185626	M16	35.0	12.0	24.0	17.5	16.0	20.0	316 Stainless Steel
20186258	M16	35.0	12.0	24.0	17.5	16.0	20.0	303 Stainless Steel
20186401	M16	35.0	12.0	24.0	17.5	16.0	20.0	316 Stainless Steel
20187163	M16	35.0	12.0	24.0	17.5	16.0	20.0	Titanium G2
20187910	M16	35.0	12.0	24.0	17.5	16.0	20.0	Titanium G5
20185633	M16	40.0	12.0	24.0	17.5	16.0	20.0	316 Stainless Steel
20186265	M16	40.0	12.0	24.0	17.5	16.0	20.0	303 Stainless Steel
20186418	M16	40.0	12.0	24.0	17.5	16.0	20.0	316 Stainless Steel
20187170	M16	40.0	12.0	24.0	17.5	16.0	20.0	Titanium G2
20187927	M16	40.0	12.0	24.0	17.5	16.0	20.0	Titanium G5
20185640	M16	45.0	12.0	24.0	17.5	16.0	20.0	316 Stainless Steel
20186272	M16	45.0	12.0	24.0	17.5	16.0	20.0	303 Stainless Steel
20186425	M16	45.0	12.0	24.0	17.5	16.0	20.0	316 Stainless Steel
20187187	M16	45.0	12.0	24.0	17.5	16.0	20.0	Titanium G2
20187934	M16	45.0	12.0	24.0	17.5	16.0	20.0	Titanium G5

Captive Screws - Cap Head

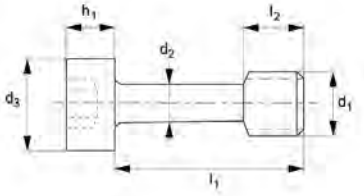

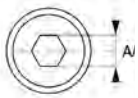

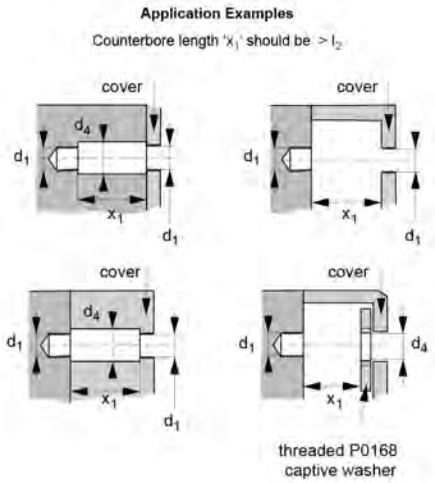



Part Number	d_1	l_1±0.25	d_2 ±0.12	d_3 max.	d_4 min.	h_1 max.	l_2±0.25	Material
20185657	M16	50.0	12.0	24.0	17.5	16.0	20.0	316 Stainless Steel
20186289	M16	50.0	12.0	24.0	17.5	16.0	20.0	303 Stainless Steel
20186432	M16	50.0	12.0	24.0	17.5	16.0	20.0	316 Stainless Steel
20187194	M16	50.0	12.0	24.0	17.5	16.0	20.0	Titanium G2
20187941	M16	50.0	12.0	24.0	17.5	16.0	20.0	Titanium G5
20185664	M16	60.0	12.0	24.0	17.5	16.0	20.0	316 Stainless Steel
20186296	M16	60.0	12.0	24.0	17.5	16.0	20.0	303 Stainless Steel
20186449	M16	60.0	12.0	24.0	17.5	16.0	20.0	316 Stainless Steel
20187200	M16	60.0	12.0	24.0	17.5	16.0	20.0	Titanium G2
20187958	M16	60.0	12.0	24.0	17.5	16.0	20.0	Titanium G5
20185671	M16	80.0	12.0	24.0	17.5	16.0	20.0	316 Stainless Steel
20186302	M16	80.0	12.0	24.0	17.5	16.0	20.0	303 Stainless Steel
20186456	M16	80.0	12.0	24.0	17.5	16.0	20.0	316 Stainless Steel
20187217	M16	80.0	12.0	24.0	17.5	16.0	20.0	Titanium G2
20187965	M16	80.0	12.0	24.0	17.5	16.0	20.0	Titanium G5
20185688	M16	100.0	12.0	24.0	17.5	16.0	20.0	316 Stainless Steel
20186319	M16	100.0	12.0	24.0	17.5	16.0	20.0	303 Stainless Steel
20186463	M16	100.0	12.0	24.0	17.5	16.0	20.0	316 Stainless Steel
20187224	M16	100.0	12.0	24.0	17.5	16.0	20.0	Titanium G2
20187972	M16	100.0	12.0	24.0	17.5	16.0	20.0	Titanium G5
20140250	M20	80.0	16.0	30.0	22.0	20.0	25.0	303 Stainless Steel
20140342	M20	40.0	16.0	30.0	22.0	20.0	25.0	303 Stainless Steel
20140359	M20	60.0	16.0	30.0	22.0	20.0	25.0	303 Stainless Steel

Captive Screws - Cap Head

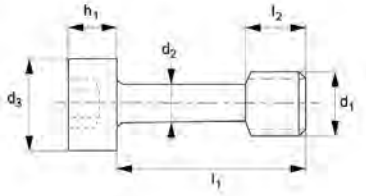

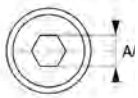

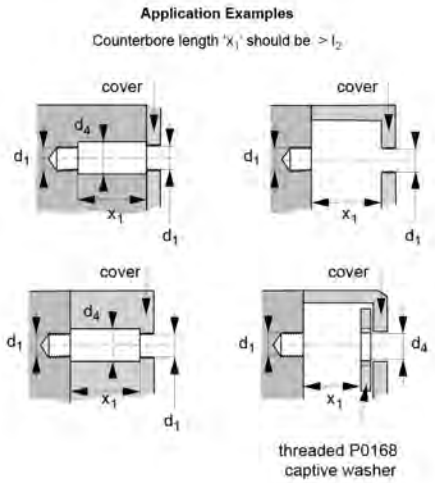



Part Number	d_1	l_1±0.25	d_2 ±0.12	d_3 max.	d_4 min.	h_1 max.	l_2±0.25	Material
20140366	M20	100.0	16.0	30.0	22.0	20.0	25.0	303 Stainless Steel
20140373	M20	120.0	16.0	30.0	22.0	20.0	25.0	303 Stainless Steel
20185695	M20	40.0	16.0	30.0	22.0	20.0	25.0	316 Stainless Steel
20186326	M20	40.0	16.0	30.0	22.0	20.0	25.0	303 Stainless Steel
20186470	M20	40.0	16.0	30.0	22.0	20.0	25.0	316 Stainless Steel
20187231	M20	40.0	16.0	30.0	22.0	20.0	25.0	Titanium G2
20187989	M20	40.0	16.0	30.0	22.0	20.0	25.0	Titanium G5
20185701	M20	60.0	16.0	30.0	22.0	20.0	25.0	316 Stainless Steel
20186333	M20	60.0	16.0	30.0	22.0	20.0	25.0	303 Stainless Steel
20186487	M20	60.0	16.0	30.0	22.0	20.0	25.0	316 Stainless Steel
20187248	M20	60.0	16.0	30.0	22.0	20.0	25.0	Titanium G2
20187996	M20	60.0	16.0	30.0	22.0	20.0	25.0	Titanium G5
20185718	M20	80.0	16.0	30.0	22.0	20.0	25.0	316 Stainless Steel
20186340	M20	80.0	16.0	30.0	22.0	20.0	25.0	303 Stainless Steel
20186494	M20	80.0	16.0	30.0	22.0	20.0	25.0	316 Stainless Steel
20187255	M20	80.0	16.0	30.0	22.0	20.0	25.0	Titanium G2
20188009	M20	80.0	16.0	30.0	22.0	20.0	25.0	Titanium G5
20185725	M20	100.0	16.0	30.0	22.0	20.0	25.0	316 Stainless Steel
20186357	M20	100.0	16.0	30.0	22.0	20.0	25.0	303 Stainless Steel
20186500	M20	100.0	16.0	30.0	22.0	20.0	25.0	316 Stainless Steel
20187262	M20	100.0	16.0	30.0	22.0	20.0	25.0	Titanium G2
20188016	M20	100.0	16.0	30.0	22.0	20.0	25.0	Titanium G5
20185732	M20	120.0	16.0	30.0	22.0	20.0	25.0	316 Stainless Steel

Captive Screws - Cap Head

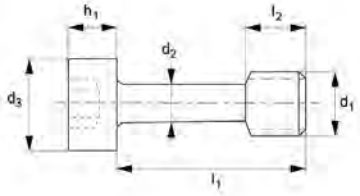

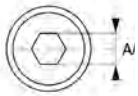

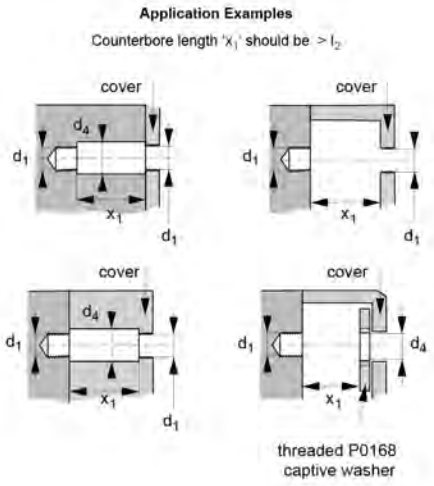



Part Number	d_1	l_1±0.25	d_2 ±0.12	d_3 max.	d_4 min.	h_1 max.	l_2±0.25	Material
20186364	M20	120.0	16.0	30.0	22.0	20.0	25.0	303 Stainless Steel
20186517	M20	120.0	16.0	30.0	22.0	20.0	25.0	316 Stainless Steel
20187279	M20	120.0	16.0	30.0	22.0	20.0	25.0	Titanium G2
20188023	M20	120.0	16.0	30.0	22.0	20.0	25.0	Titanium G5

Captive Screws - Cheese Head

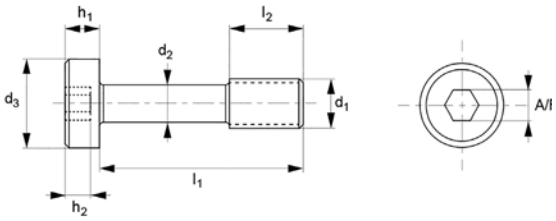

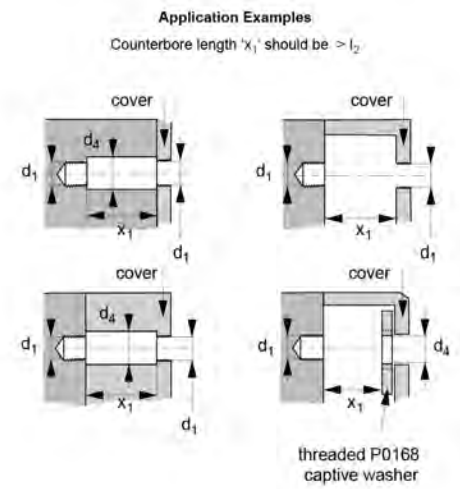



Features

- An ideal fitting solution for panels with non-threaded holes.
- Used to comply with the Machinery Detective 2006/42/EC - generally to ISO 1207.
- The material is a popular choice for construction and automotive applications.

Specifications

Material: 303 Stainless Steel

This range of Captive Screws feature a cheese head with a hexagonal drive. Hexagonal drives are ideal for precision assembly and are ideally used where less surface area is available.

They are an ideal fitting solution for panels with non-threaded holes. They are used to comply with the Machinery Detective 2006/42/EC - generally to ISO 1207. Captive Screws are commonly used with Threaded Captive Washers (sold separately).

These screws are made from Stainless Steel that provides good resistance to corrosion and machinability. The material is a popular choice for construction and automotive applications.

Please Note: These screws have a smaller shank diameter and should not be tightened to the recommended torque for an equivalent screw of the displayed thread size.

Captive Screws - Cheese Head

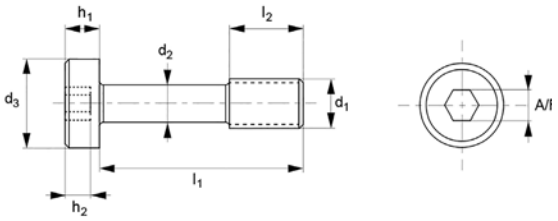

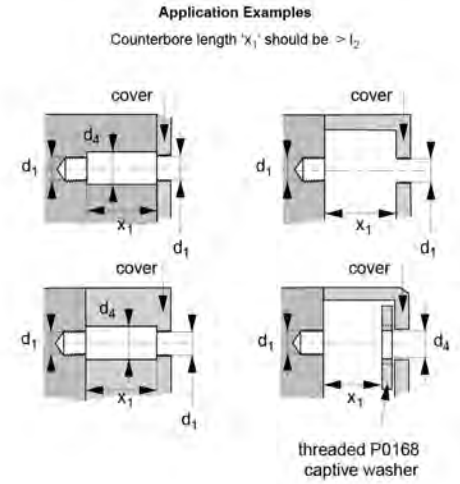



Part Number	d_1	l_1±0.25	d_2 ±0.12	l_2±0.25	d_3	d_4 min.	h_1
20137267	M2	10.0	1.2	3.0	3.8	2.5	1.3
20137274	M2	12.0	1.2	3.0	3.8	2.5	1.3
20137281	M2	16.0	1.2	3.0	3.8	2.5	1.3
20137298	M2	20.0	1.2	3.0	3.8	2.5	1.3
20137205	M2.5	16.0	1.7	3.7	4.5	2.8	1.6
20137304	M2.5	10.0	1.7	3.7	4.5	2.8	1.6
20137311	M2.5	20.0	1.7	3.7	4.5	2.8	1.6
20137328	M2.5	25.0	1.7	3.7	4.5	2.8	1.6
20137335	M2.5	30.0	1.7	3.7	4.5	2.8	1.6
20140779	M2.5	8.0	1.7	3.7	4.5	2.8	2.0
20137342	M3	10.0	2.0	4.5	5.5	3.5	2.0
20137359	M3	16.0	2.0	4.5	5.5	3.5	2.0
20137366	M3	20.0	2.0	4.5	5.5	3.5	2.0
20137373	M3	25.0	2.0	4.5	5.5	3.5	2.0
20137380	M3	30.0	2.0	4.5	5.5	3.5	2.0
20137397	M3	40.0	2.0	4.5	5.5	3.5	2.0
20138837	M3	11.0	2.0	4.5	5.5	3.5	2.0
20138844	M3	13.0	2.0	4.5	5.5	3.5	2.0
20138868	M3	18.0	2.0	4.5	5.5	3.5	2.0
20137403	M3.5	10.0	2.3	5.2	6.0	3.8	2.4
20137410	M3.5	16.0	2.3	5.2	6.0	3.8	2.4

Captive Screws - Cheese Head

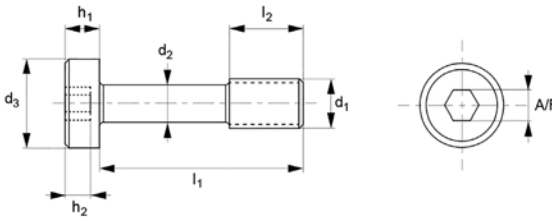

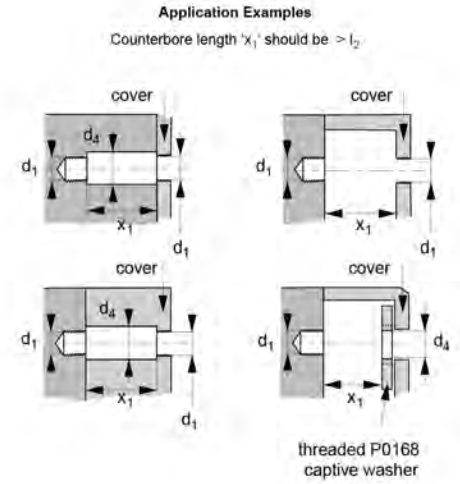



Part Number	d_1	l_1±0.25	d_2 ±0.12	l_2±0.25	d_3	d_4 min.	h_1
20137427	M3.5	20.0	2.3	5.2	6.0	3.8	2.4
20137434	M3.5	25.0	2.3	5.2	6.0	3.8	2.4
20137441	M3.5	30.0	2.3	5.2	6.0	3.8	2.4
20137458	M3.5	40.0	2.3	5.2	6.0	3.8	2.4
20137465	M4	12.0	2.8	6.0	7.0	4.5	2.6
20137472	M4	16.0	2.8	6.0	7.0	4.5	2.6
20137489	M4	20.0	2.8	6.0	7.0	4.5	2.6
20137496	M4	30.0	2.8	6.0	7.0	4.5	2.6
20137502	M4	40.0	2.8	6.0	7.0	4.5	2.6
20137519	M4	60.0	2.8	6.0	7.0	4.5	2.6
20138806	M4	18.0	2.8	6.0	7.0	4.5	2.6
20138813	M4	19.0	2.8	6.0	7.0	4.5	2.6
20138875	M4	25.0	2.8	6.0	7.0	4.5	2.6
20138882	M4	50.0	2.8	6.0	7.0	4.5	2.6
20140380	M4	10.0	2.8	6.0	7.0	4.5	2.6
20137526	M5	12.0	3.7	7.5	8.5	5.5	3.3
20137533	M5	16.0	3.7	7.5	8.5	5.5	3.3
20137540	M5	20.0	3.7	7.5	8.5	5.5	3.3
20137557	M5	30.0	3.7	7.5	8.5	5.5	3.3
20137564	M5	40.0	3.7	7.5	8.5	5.5	3.3
20137571	M5	50.0	3.7	7.5	8.5	5.5	3.3

Captive Screws - Cheese Head

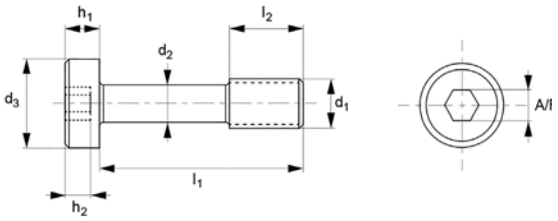

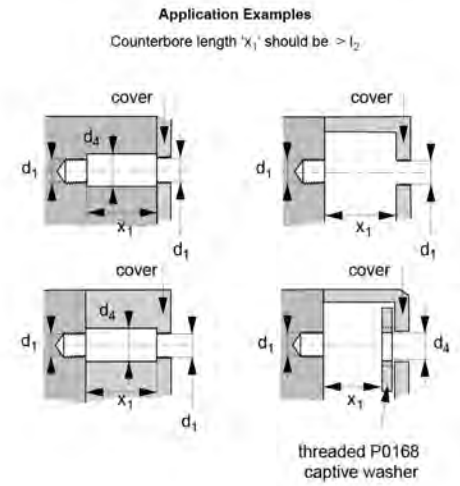



Part Number	d_1	l_1±0.25	d_2 ±0.12	l_2±0.25	d_3	d_4 min.	h_1
20137588	M5	60.0	3.7	7.5	8.5	5.5	3.3
20137595	M5	80.0	3.7	7.5	8.5	5.5	3.3
20138820	M5	22.0	3.7	7.5	8.5	5.5	3.3
20138899	M5	18.0	3.7	7.5	8.5	5.5	3.3
20138905	M5	25.0	3.7	7.5	8.5	5.5	3.3
20140632	M5	10.0	3.7	7.5	8.5	5.5	3.3
20137601	M6	16.0	4.2	7.5	10.0	6.5	3.9
20137618	M6	20.0	4.2	7.5	10.0	6.5	3.9
20137625	M6	30.0	4.2	7.5	10.0	6.5	3.9
20137632	M6	40.0	4.2	7.5	10.0	6.5	3.9
20137649	M6	50.0	4.2	7.5	10.0	6.5	3.9
20137656	M6	60.0	4.2	7.5	10.0	6.5	3.9
20137663	M6	80.0	4.2	7.5	10.0	6.5	3.9
20138912	M6	25.0	4.2	7.5	10.0	6.5	3.9

Captive Screws - Countersunk

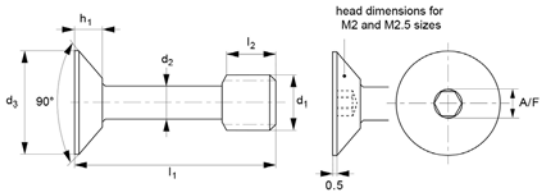

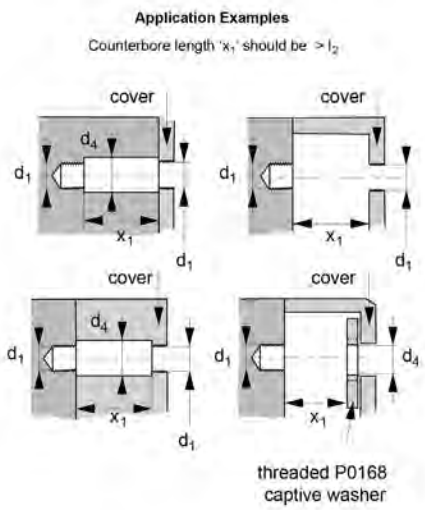



Features

- They are a popular choice for applications where screws need to be removed frequently or where safety is a concern.
- Hexagonal drives are ideal for precision assembly and are used where less surface area is available.
- Used to comply with Machinery Detective 2006/42/EC - in general, ISO 1207.

Specifications

Material: 303 Stainless Steel

Captive Screws are secure joint fasteners designed to remain attached to the component they are installed in, even when fully loosened, providing convenience, security and ease of use in a variety of applications. They are a popular choice for applications where screws need to be removed frequently or where safety is a concern, as these screws will stay firmly in place and will not loosen from the assembly. These screws are commonly used in electronics, industrial machinery, cabinets, panels and medical devices.

This range of Captive Screws features a countersunk head and hexagonal drive. Hexagonal drives are ideal for precision assembly and are used where less surface area is available. They are used to comply with Machinery Detective 2006/42/EC - in general, ISO 1207, which requires fasteners to stay attached to fixed guards or applications when they are removed.

The screws are made from Stainless Steel, which is corrosion resistant and slightly magnetic. These screws are commonly used in electronics, industrial machinery, cabinets, panels and medical devices.

Please keep in mind that because these screws have a smaller shank diameter, they should not be tightened to the suggested torque for an identical screw with the same thread size.

Captive Screws - Countersunk

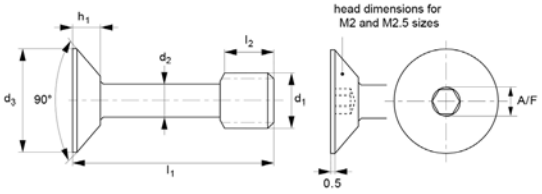

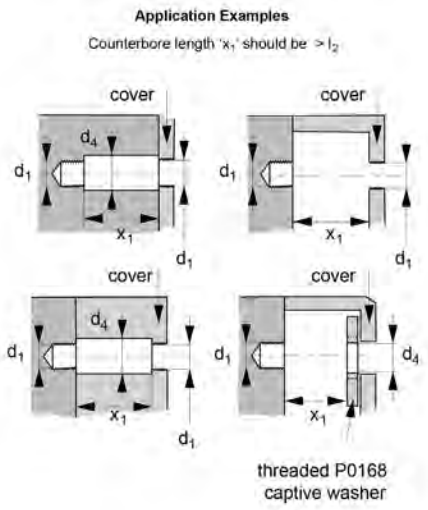



Part Number	d1	l1_025	d2 a012	d3 max	d4 min	h1 max	l2 ±0.25	A/F
20180737	M2	10.0	1.2	3.8	2.5	1.20	3.5	1.0
20180744	M2	12.0	1.2	3.8	2.5	1.20	3.5	1.0
20180751	M2	16.0	1.2	3.8	2.5	1.20	3.5	1.0
20180768	M2	20.0	1.2	3.8	2.5	1.20	3.5	1.0
20180775	M2.5	10.0	1.7	4.7	2.8	1.80	3.7	1.3
20180782	M2.5	12.0	1.7	4.7	2.8	1.80	3.7	1.3
20180799	M2.5	16.0	1.7	4.7	2.8	1.80	3.7	1.3
20180805	M2.5	20.0	1.7	4.7	2.8	1.80	3.7	1.3
20182182	M3	8.0	2.0	5.6	3.5	1.65	4.5	1.5
20180812	M3	10.0	2.0	5.6	3.5	1.65	4.5	1.5
20181758	M3	12.0	2.0	5.6	3.5	1.65	4.5	1.5
20180829	M3	16.0	2.0	5.6	3.5	1.65	4.5	1.5
20180836	M3	20.0	2.0	5.6	3.5	1.65	4.5	1.5
20180843	M3	25.0	2.0	5.6	3.5	1.65	4.5	1.5
20180850	M3	30.0	2.0	5.6	3.5	1.65	4.5	1.5
20188474	M3	35.0	2.0	5.6	3.5	1.65	4.5	1.5
20180867	M3	40.0	2.0	5.6	3.5	1.65	4.5	1.5
20182199	M4	10.0	2.8	7.5	4.5	2.20	6.0	2.0
20180874	M4	12.0	2.8	7.5	4.5	2.20	6.0	2.0
20188481	M4	14.	2.8	7.5	4.5	2.20	6.0	2.0
20180881	M4	16.0	2.8	7.5	4.5	2.20	6.0	2.0
20180898	M4	20.0	2.8	7.5	4.5	2.20	6.0	2.0

Captive Screws - Countersunk

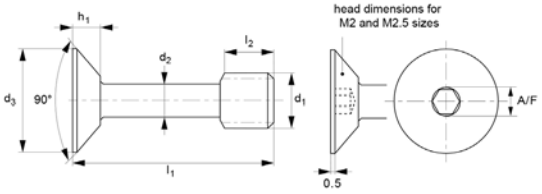

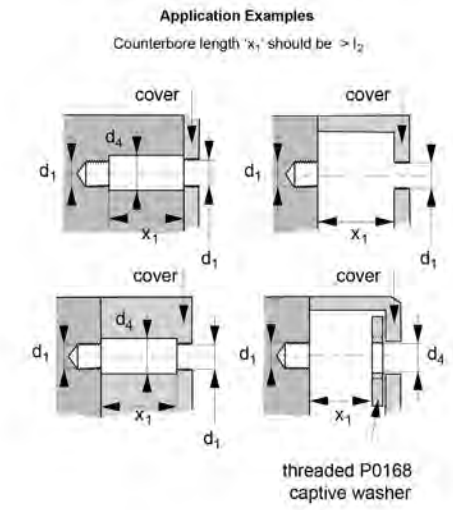



Part Number	d1	l1_025	d2 a012	d3 max	d4 min	h1 max	l2 ±0.25	A/F
20181079	M4	25.0	2.8	7.5	4.5	2.20	6.0	2.0
20180904	M4	30.0	2.8	7.5	4.5	2.20	6.0	2.0
20188498	M4	35.0	2.8	7.5	4.5	2.20	6.0	2.0
20180911	M4	40.0	2.8	7.5	4.5	2.20	6.0	2.0
20180928	M4	50.0	2.8	7.5	4.5	2.20	6.0	2.0
20180935	M4	60.0	2.8	7.5	4.5	2.20	6.0	2.0
20180942	M5	12.0	3.7	9.2	5.5	2.50	7.5	2.5
20188504	M5	14.0	3.7	9.2	5.5	2.50	7.5	2.5
20180959	M5	16.0	3.7	9.2	5.5	2.50	7.5	2.5
20180966	M5	20.0	3.7	9.2	5.5	2.50	7.5	2.5
20181086	M5	25.0	3.7	9.2	5.5	2.50	7.5	2.5
20180973	M5	30.0	3.7	9.2	5.5	2.50	7.5	2.5
20188511	M5	35.0	3.7	9.2	5.5	2.50	7.5	2.5
20180980	M5	40.0	3.7	9.2	5.5	2.50	7.5	2.5
20180997	M5	50.0	3.7	9.2	5.5	2.50	7.5	2.5
20181000	M5	60.0	3.7	9.2	5.5	2.50	7.5	2.5
20181017	M6	16.0	4.2	11.0	6.5	3.00	8.0	3.0
20181024	M6	20.0	4.2	11.0	6.5	3.00	8.0	3.0
20181093	M6	25.0	4.2	11.0	6.5	3.00	8.0	3.0
20181031	M6	30.0	4.2	11.0	6.5	3.00	8.0	3.0
20188528	M6	35.0	4.2	11.0	6.5	3.00	8.0	3.0
20181048	M6	40.0	4.2	11.0	6.5	3.00	8.0	3.0

Captive Screws - Countersunk

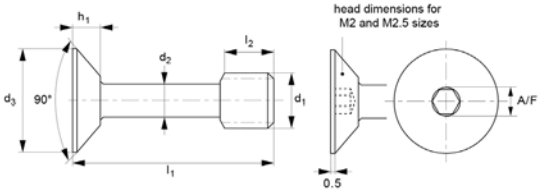

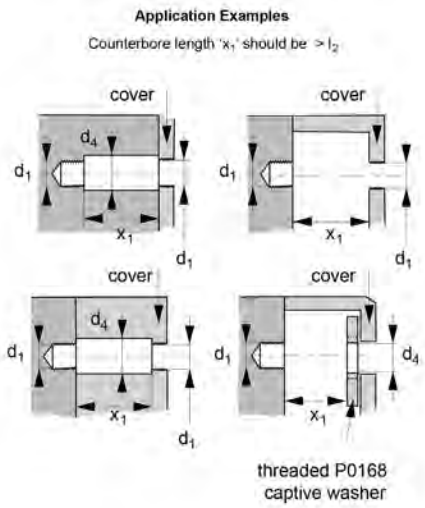



Part Number	d1	l1_025	d2 a012	d3 max	d4 min	h1 max	l2 ±0.25	A/F
20181055	M6	50.0	4.2	11.0	6.5	3.00	8.0	3.0
20181062	M6	60.0	4.2	11.0	6.5	3.00	8.0	3.0
20182229	M8	20.0	6.0	15.0	8.5	4.10	10.0	4.0
20186104	M8	25.0	6.0	15.0	8.5	4.10	10.0	4.0
20186111	M8	30.0	6.0	15.0	8.5	4.10	10.0	4.0
20186128	M8	40.0	6.0	15.0	8.5	4.10	10.0	4.0
20186135	M8	50.0	6.0	15.0	8.5	4.10	10.0	4.0
20186142	M8	60.0	6.0	15.0	8.5	4.10	10.0	4.0

Captive Screws - Pan Head

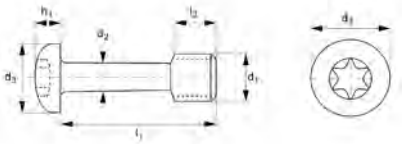

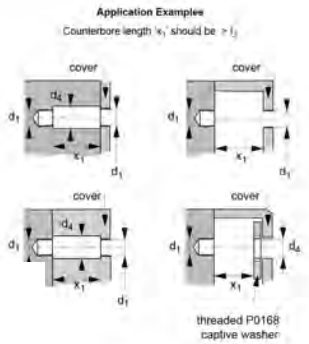

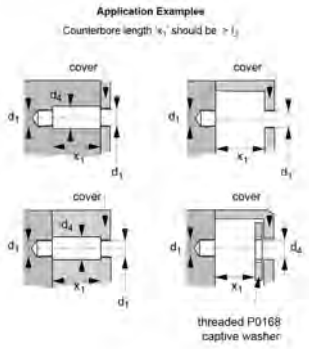



Features

- An ideal fitting solution for panels with non-threaded holes.
- Used to comply with the Machinery Detective 2006/42/EC - generally to ISO 14583.
- The material is a popular choice for construction and automotive applications.

Specifications

Material: 303 Stainless Steel

This range of Captive Screws have a pan head with two options: one with a Torx drive and one with a Philips drive. On the one hand, Screws with Torx drive provide a positive, quick engagement that transmits torque with less downward pressure. In contrast, screws Philips drive can withstand high torque, making them a good choice for applications requiring a tight fit and making the screw easy to remove, even if it has been driven in tightly. They both offer an excellent fastening appearance, ideal for finished product presentation.

These screws are an ideal fitting solution for panels with non-threaded holes. The M8 sizes have a reduced Torx, while the M3, M4, M5, and M6 sizes have a Philips drive. They are used to comply with the Machinery Detective 2006/42/EC - generally to ISO 14583. Captive Screws are commonly used with Threaded Captive Washers (sold separately).

These screws are made from austenitic Stainless Steel that provides good resistance to corrosion and machinability. The material is a popular choice for construction and automotive applications.
Please Note: These screws have a smaller shank diameter and should not be tightened to the recommended torque for an equivalent screw of the displayed thread size.

Captive Screws - Pan Head

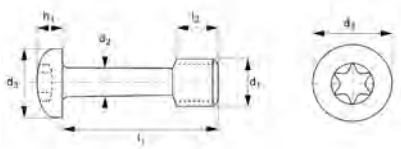

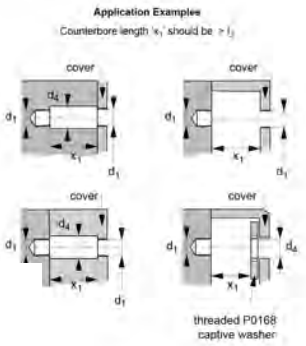

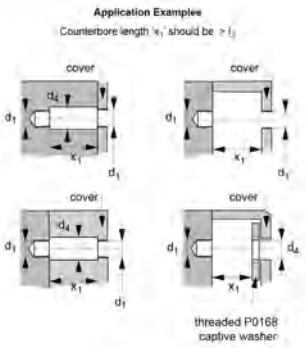



Part Number	d_1	l_1±0.25	d_2 ±0.12	d_3 max.	h_1 max.	l_2±0.25	Drive Type
20180034	M2.5	8.0	1.7	5.0	2.1	3.7	Philips Drive
20180058	M2.5	10.0	1.7	5.0	2.1	3.7	Philips Drive
20137670	M3	10.0	2.0	6.0	2.5	4.5	Torx Drive
20137687	M3	16.0	2.0	6.0	2.5	4.5	Torx Drive
20137694	M3	20.0	2.0	6.0	2.5	4.5	Torx Drive
20137700	M3	25.0	2.0	6.0	2.5	4.5	Torx Drive
20138257	M3	30.0	2.0	6.0	2.5	4.5	Torx Drive
20140083	M3	8.0	2.0	6.0	2.5	4.5	Torx Drive
20182304	M3	10.0	2.0	5.6	2.4	4.5	Philips Drive
20180065	M3	16.0	2.0	5.6	2.4	4.5	Philips Drive
20180072	M3	20.0	2.0	5.6	2.4	4.5	Philips Drive
20188030	M3	25.0	2.0	5.6	2.4	4.5	Philips Drive
20186074	M3	30.0	2.0	5.6	2.4	4.5	Philips Drive
20188047	M3	40.0	2.0	5.6	2.4	4.5	Philips Drive
20137717	M4	12.0	2.8	8.0	3.2	6.0	Torx Drive
20137724	M4	16.0	2.8	8.0	3.2	6.0	Torx Drive
20137731	M4	20.0	2.8	8.0	3.2	6.0	Torx Drive
20137748	M4	30.0	2.8	8.0	3.2	6.0	Torx Drive
20137755	M4	40.0	2.8	8.0	3.2	6.0	Torx Drive
20137762	M4	50.0	2.8	8.0	3.2	6.0	Torx Drive
20139179	M4	25.0	2.8	8.0	3.2	6.0	Torx Drive
20140076	M4	8.0	2.8	8.0	3.2	6.0	Torx Drive

Captive Screws - Pan Head

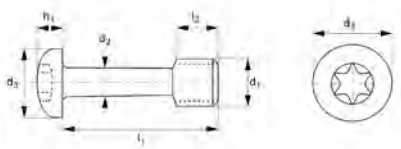

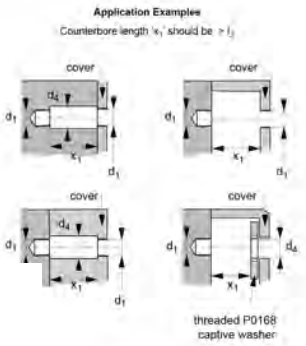

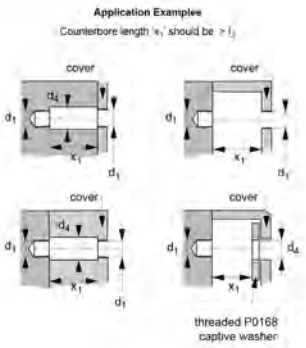



Part Number	d_1	l_1±0.25	d_2 ±0.12	d_3 max.	h_1 max.	l_2±0.25	Drive Type
20140090	M4	6.0	2.8	8.0	3.2	6.0	Torx Drive
20140106	M4	10.0	2.8	8.0	3.2	6.0	Torx Drive
20188054	M4	10.0	2.8	8.0	3.1	6.0	Philips Drive
20180089	M4	12.0	2.8	8.0	3.1	6.0	Philips Drive
20180096	M4	16.0	2.8	8.0	3.1	6.0	Philips Drive
20180102	M4	20.0	2.8	8.0	3.1	6.0	Philips Drive
20188061	M4	25.0	2.8	8.0	3.1	6.0	Philips Drive
20180195	M4	30.0	2.8	8.0	3.1	6.0	Philips Drive
20180201	M4	40.0	2.8	8.0	3.1	6.0	Philips Drive
20188078	M4	50.0	2.8	8.0	3.1	6.0	Philips Drive
20188085	M4	60.0	2.8	8.0	3.1	6.0	Philips Drive
20137779	M5	12.0	3.7	10.0	3.9	7.5	Torx Drive
20137786	M5	16.0	3.7	10.0	3.9	7.5	Torx Drive
20137793	M5	20.0	3.7	10.0	3.9	7.5	Torx Drive
20137809	M5	30.0	3.7	10.0	3.9	7.5	Torx Drive
20137816	M5	40.0	3.7	10.0	3.9	7.5	Torx Drive
20137823	M5	50.0	3.7	10.0	3.9	7.5	Torx Drive
20140113	M5	10.0	3.7	10.0	3.9	7.5	Torx Drive
20140120	M5	25.0	3.7	10.0	3.9	7.5	Torx Drive
20188092	M5	10.0	3.7	9.5	3.7	7.5	Philips Drive
20180119	M5	12.0	3.7	9.5	3.7	7.5	Philips Drive
20180126	M5	16.0	3.7	9.5	3.7	7.5	Philips Drive

Captive Screws - Pan Head

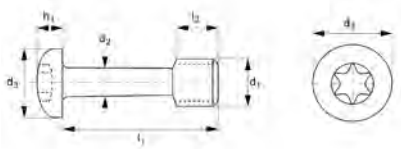

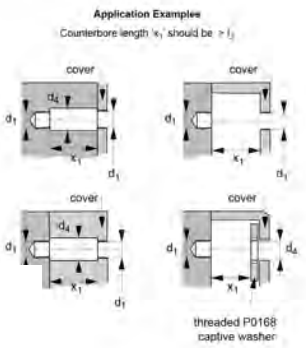

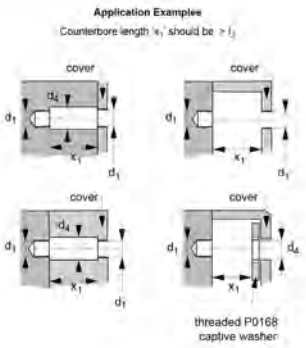



Part Number	d_1	l_1±0.25	d_2 ±0.12	d_3 max.	h_1 max.	l_2±0.25	Drive Type
20180133	M5	20.0	3.7	9.5	3.7	7.5	Philips Drive
20188108	M5	25.0	3.7	9.5	3.7	7.5	Philips Drive
20180218	M5	30.0	3.7	9.5	3.7	7.5	Philips Drive
20188115	M5	40.0	3.7	9.5	3.7	7.5	Philips Drive
20188122	M5	50.0	3.7	9.5	3.7	7.5	Philips Drive
20188139	M5	60.0	3.7	9.5	3.7	7.5	Philips Drive
20137830	M6	16.0	4.2	12.0	4.7	7.5	Torx Drive
20137847	M6	20.0	4.2	12.0	4.7	7.5	Torx Drive
20137854	M6	30.0	4.2	12.0	4.7	7.5	Torx Drive
20137861	M6	40.0	4.2	12.0	4.7	7.5	Torx Drive
20137878	M6	50.0	4.2	12.0	4.7	7.5	Torx Drive
20137885	M6	60.0	4.2	12.0	4.7	7.5	Torx Drive
20140137	M6	10.0	4.2	12.0	4.7	7.5	Torx Drive
20140144	M6	12.0	4.2	12.0	4.7	7.5	Torx Drive
20140151	M6	25.0	4.2	12.0	4.7	7.5	Torx Drive
20140403	M6	80.0	4.2	12.0	4.7	7.5	Torx Drive
20180713	M6	12.0	4.2	12.0	4.7	7.5	Philips Drive
20180157	M6	16.0	4.2	12.0	4.7	7.5	Philips Drive
20180140	M6	20.0	4.2	12.0	4.7	7.5	Philips Drive
20188146	M6	25.0	4.2	12.0	4.7	7.5	Philips Drive
20180041	M6	30.0	4.2	12.0	4.7	7.5	Philips Drive
20188153	M6	40.0	4.2	12.0	4.7	7.5	Philips Drive

Captive Screws - Pan Head

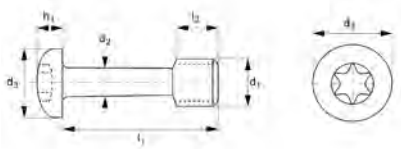

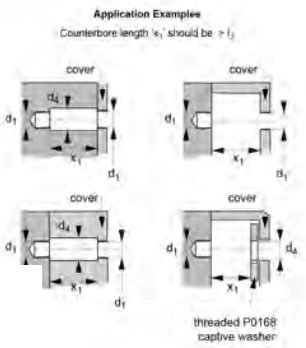

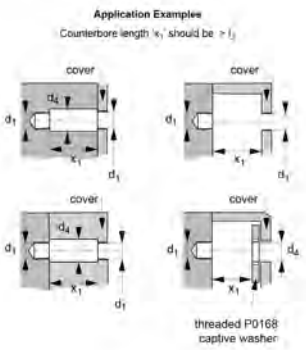



Part Number	d_1	l_1±0.25	d_2 ±0.12	d_3 max.	h_1 max.	l_2±0.25	Drive Type
20180225	M6	50.0	4.2	12.0	4.7	7.5	Philips Drive
20188160	M6	60.0	4.2	12.0	4.7	7.5	Philips Drive
20188177	M6	80.0	4.2	12.0	4.7	7.5	Philips Drive
20140168	M8	12.0	6.0	16.0	6.1	10.0	Torx Drive
20140175	M8	16.0	6.0	16.0	6.1	10.0	Torx Drive
20140182	M8	25.0	6.0	16.0	6.1	10.0	Torx Drive
20140199	M8	30.0	6.0	16.0	6.1	10.0	Torx Drive
20140205	M8	40.0	6.0	16.0	6.1	10.0	Torx Drive
20140212	M8	50.0	6.0	16.0	6.1	10.0	Torx Drive
20140229	M8	60.0	6.0	16.0	6.1	10.0	Torx Drive
20140236	M8	80.0	6.0	16.0	6.1	10.0	Torx Drive
20140410	M8	20.0	6.0	16.0	6.1	10.0	Torx Drive
20140427	M8	25.0	6.0	16.0	6.1	10.0	Torx Drive
20140434	M8	45.0	6.0	16.0	6.1	10.0	Torx Drive

Captive Thumb Screws - Long Head

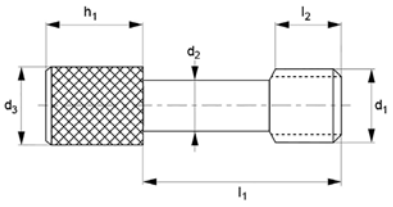

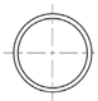

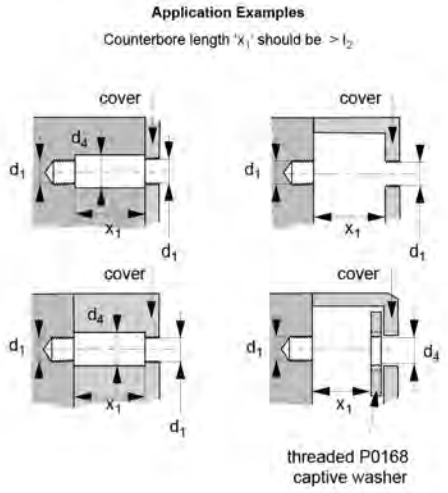



Features

- This range of Captive Thumb Screws features a long head. They are an ideal fitting solution for panels with non-threaded holes. Available in a choice of Blackened or Natural finishes.
- Made from austenitic Stainless Steel that provides good resistance to corrosion and machinability
- Used to comply with the Machinery Detective 2006/42/EC.

Specifications

Material: 316 Stainless Steel, 303 Stainless Steel

This range of Captive Thumb Screws features a long head. They are an ideal fitting solution for panels with non-threaded holes. They are used to comply with the Machinery Detective 2006/42/EC.

They are commonly used with Threaded Captive Washers (sold separately).

The screws are made from austenitic Stainless Steel that provides good resistance to corrosion and machinability, and you can find some of them with a blackened finish and others without.. The material is a popular choice for construction and automotive applications.

Please Note: These screws have a smaller shank diameter and should not be tightened to the recommended torque for an equivalent screw of the displayed thread size.

Part Number	d_1	d_2 ±0.12	d_3	d_4 min.	l_1±0.25	l_2±0.25	h_1	Material
20137892	M3	2.0	5.0	3.5	16.0	8.0	10.0	303 Stainless Steel
20137908	M3	2.0	5.0	3.5	20.0	10.0	10.0	303 Stainless Steel
20137915	M3	2.0	5.0	3.5	25.0	12.5	10.0	303 Stainless Steel
20137922	M3	2.0	5.0	3.5	30.0	15.0	10.0	303 Stainless Steel

Captive Thumb Screws - Long Head

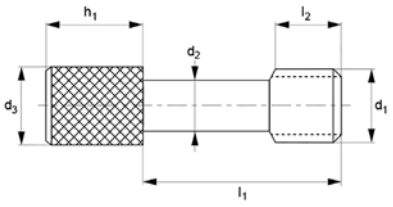



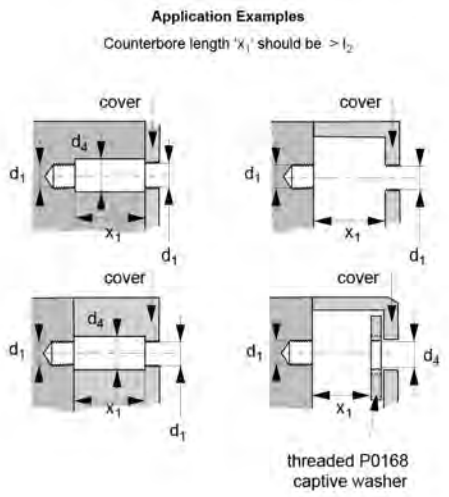



Part Number	d_1	d_2 ±0.12	d_3	d_4 min.	l_1±0.25	l_2±0.25	h_1	Material
20137939	M3	2.0	5.0	3.5	35.0	17.5	10.0	303 Stainless Steel
20137946	M3	2.0	5.0	3.5	40.0	20.0	10.0	303 Stainless Steel
20137953	M3	2.0	5.0	3.5	50.0	25.0	10.0	303 Stainless Steel
20181116	M3	2.0	5.0	3.5	16.0	8.0	10.0	316 Stainless Steel
20183752	M3	2.0	5.0	3.5	16.0	8.0	10.0	303 Stainless Steel
20184100	M3	2.0	5.0	3.5	16.0	8.0	10.0	316 Stainless Steel
20181123	M3	2.0	5.0	3.5	20.0	10.0	10.0	316 Stainless Steel
20183769	M3	2.0	5.0	3.5	20.0	10.0	10.0	303 Stainless Steel
20184117	M3	2.0	5.0	3.5	20.0	10.0	10.0	316 Stainless Steel
20181130	M3	2.0	5.0	3.5	25.0	12.5	10.0	316 Stainless Steel
20183776	M3	2.0	5.0	3.5	25.0	12.5	10.0	303 Stainless Steel
20184124	M3	2.0	5.0	3.5	25.0	12.5	10.0	316 Stainless Steel
20181147	M3	2.0	5.0	3.5	30.0	15.0	10.0	316 Stainless Steel
20183783	M3	2.0	5.0	3.5	30.0	15.0	10.0	303 Stainless Steel
20184131	M3	2.0	5.0	3.5	30.0	15.0	10.0	316 Stainless Steel
20181154	M3	2.0	5.0	3.5	35.0	17.5	10.0	316 Stainless Steel
20183790	M3	2.0	5.0	3.5	35.0	17.5	10.0	303 Stainless Steel
20184148	M3	2.0	5.0	3.5	35.0	17.5	10.0	316 Stainless Steel
20181161	M3	2.0	5.0	3.5	40.0	20.0	10.0	316 Stainless Steel
20183806	M3	2.0	5.0	3.5	40.0	20.0	10.0	303 Stainless Steel
20184155	M3	2.0	5.0	3.5	40.0	20.0	10.0	316 Stainless Steel
20181178	M3	2.0	5.0	3.5	50.0	25.0	10.0	316 Stainless Steel
20183813	M3	2.0	5.0	3.5	50.0	25.0	10.0	303 Stainless Steel

Captive Thumb Screws - Long Head

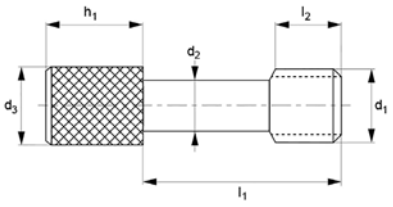



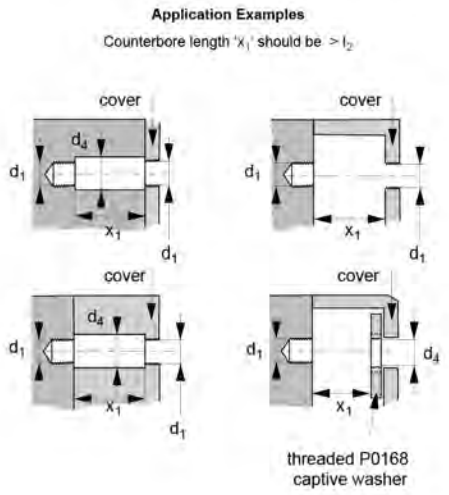



Part Number	d_1	d_2 ±0.12	d_3	d_4 min.	l_1±0.25	l_2±0.25	h_1	Material
20184162	M3	2.0	5.0	3.5	50.0	25.0	10.0	316 Stainless Steel
20137960	M3.5	2.3	5.0	3.8	16.0	8.0	10.0	303 Stainless Steel
20137977	M3.5	2.3	5.0	3.8	20.0	10.0	10.0	303 Stainless Steel
20137984	M3.5	2.3	5.0	3.8	25.0	12.5	10.0	303 Stainless Steel
20137991	M3.5	2.3	5.0	3.8	30.0	15.0	10.0	303 Stainless Steel
20138004	M3.5	2.3	5.0	3.8	35.0	17.5	10.0	303 Stainless Steel
20138011	M3.5	2.3	5.0	3.8	40.0	20.0	10.0	303 Stainless Steel
20138028	M3.5	2.3	5.0	3.8	50.0	25.0	10.0	303 Stainless Steel
20181185	M3.5	2.3	5.0	3.8	16.0	8.0	10.0	316 Stainless Steel
20183820	M3.5	2.3	5.0	3.8	16.0	8.0	10.0	303 Stainless Steel
20184179	M3.5	2.3	5.0	3.8	16.0	8.0	10.0	316 Stainless Steel
20181192	M3.5	2.3	5.0	3.8	20.0	10.0	10.0	316 Stainless Steel
20183837	M3.5	2.3	5.0	3.8	20.0	10.0	10.0	303 Stainless Steel
20184186	M3.5	2.3	5.0	3.8	20.0	10.0	10.0	316 Stainless Steel
20181208	M3.5	2.3	5.0	3.8	25.0	12.5	10.0	316 Stainless Steel
20183844	M3.5	2.3	5.0	3.8	25.0	12.5	10.0	303 Stainless Steel
20184193	M3.5	2.3	5.0	3.8	25.0	12.5	10.0	316 Stainless Steel
20181215	M3.5	2.3	5.0	3.8	30.0	15.0	10.0	316 Stainless Steel
20183851	M3.5	2.3	5.0	3.8	30.0	15.0	10.0	303 Stainless Steel
20184209	M3.5	2.3	5.0	3.8	30.0	15.0	10.0	316 Stainless Steel
20181222	M3.5	2.3	5.0	3.8	35.0	17.5	10.0	316 Stainless Steel
20183868	M3.5	2.3	5.0	3.8	35.0	17.5	10.0	303 Stainless Steel
20184216	M3.5	2.3	5.0	3.8	35.0	17.5	10.0	316 Stainless Steel

Captive Thumb Screws - Long Head

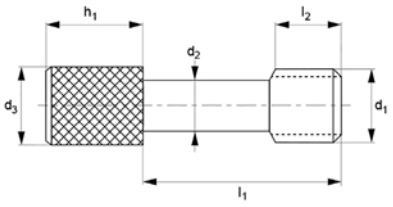



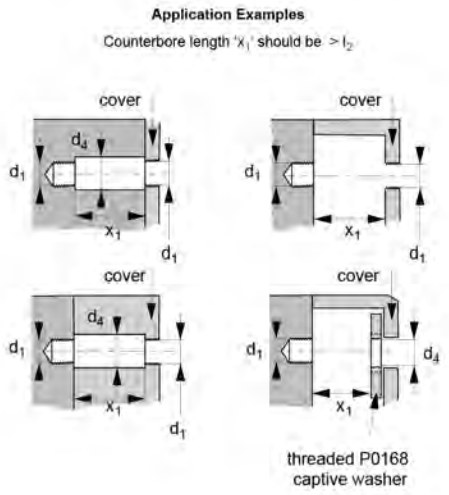



Part Number	d_1	d_2 ±0.12	d_3	d_4 min.	l_1±0.25	l_2±0.25	h_1	Material
20181239	M3.5	2.3	5.0	3.8	40.0	20.0	10.0	316 Stainless Steel
20183875	M3.5	2.3	5.0	3.8	40.0	20.0	10.0	303 Stainless Steel
20184223	M3.5	2.3	5.0	3.8	40.0	20.0	10.0	316 Stainless Steel
20181246	M3.5	2.3	5.0	3.8	50.0	25.0	10.0	316 Stainless Steel
20183882	M3.5	2.3	5.0	3.8	50.0	25.0	10.0	303 Stainless Steel
20184230	M3.5	2.3	5.0	3.8	50.0	25.0	10.0	316 Stainless Steel
20138035	M4	2.8	5.0	4.5	16.0	8.0	10.0	303 Stainless Steel
20138042	M4	2.8	5.0	4.5	20.0	10.0	10.0	303 Stainless Steel
20138059	M4	2.8	5.0	4.5	25.0	12.5	10.0	303 Stainless Steel
20138066	M4	2.8	5.0	4.5	30.0	15.0	10.0	303 Stainless Steel
20138073	M4	2.8	5.0	4.5	35.0	17.5	10.0	303 Stainless Steel
20138080	M4	2.8	5.0	4.5	40.0	20.0	10.0	303 Stainless Steel
20138097	M4	2.8	5.0	4.5	50.0	25.0	10.0	303 Stainless Steel
20181253	M4	2.8	5.0	4.5	16.0	8.0	10.0	316 Stainless Steel
20183899	M4	2.8	5.0	4.5	16.0	8.0	10.0	303 Stainless Steel
20184247	M4	2.8	5.0	4.5	16.0	8.0	10.0	316 Stainless Steel
20181260	M4	2.8	5.0	4.5	20.0	10.0	10.0	316 Stainless Steel
20183905	M4	2.8	5.0	4.5	20.0	10.0	10.0	303 Stainless Steel
20184254	M4	2.8	5.0	4.5	20.0	10.0	10.0	316 Stainless Steel
20181277	M4	2.8	5.0	4.5	25.0	12.5	10.0	316 Stainless Steel
20183912	M4	2.8	5.0	4.5	25.0	12.5	10.0	303 Stainless Steel
20184261	M4	2.8	5.0	4.5	25.0	12.5	10.0	316 Stainless Steel
20181284	M4	2.8	5.0	4.5	30.0	15.0	10.0	316 Stainless Steel

Captive Thumb Screws - Long Head

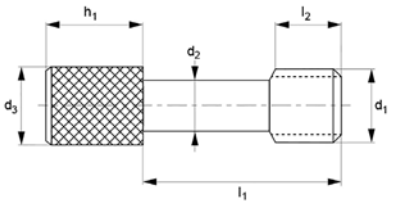



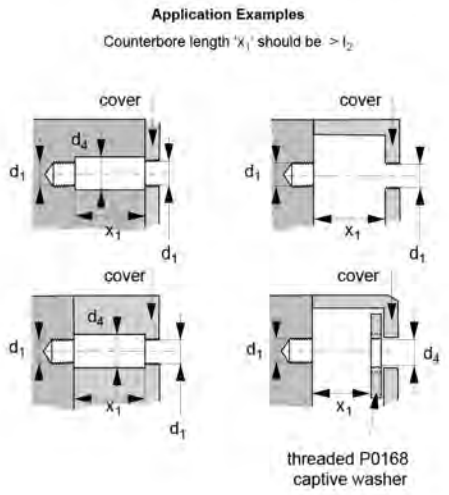



Part Number	d_1	d_2 ±0.12	d_3	d_4 min.	l_1±0.25	l_2±0.25	h_1	Material
20183929	M4	2.8	5.0	4.5	30.0	15.0	10.0	303 Stainless Steel
20184278	M4	2.8	5.0	4.5	30.0	15.0	10.0	316 Stainless Steel
20181291	M4	2.8	5.0	4.5	35.0	17.5	10.0	316 Stainless Steel
20183936	M4	2.8	5.0	4.5	35.0	17.5	10.0	303 Stainless Steel
20184285	M4	2.8	5.0	4.5	35.0	17.5	10.0	316 Stainless Steel
20181307	M4	2.8	5.0	4.5	40.0	20.0	10.0	316 Stainless Steel
20183943	M4	2.8	5.0	4.5	40.0	20.0	10.0	303 Stainless Steel
20184292	M4	2.8	5.0	4.5	40.0	20.0	10.0	316 Stainless Steel
20181314	M4	2.8	5.0	4.5	50.0	25.0	10.0	316 Stainless Steel
20183950	M4	2.8	5.0	4.5	50.0	25.0	10.0	303 Stainless Steel
20184308	M4	2.8	5.0	4.5	50.0	25.0	10.0	316 Stainless Steel
20138103	M5	3.7	6.0	5.5	16.0	8.0	12.0	303 Stainless Steel
20138110	M5	3.7	6.0	5.5	20.0	10.0	12.0	303 Stainless Steel
20138127	M5	3.7	6.0	5.5	25.0	12.5	12.0	303 Stainless Steel
20138134	M5	3.7	6.0	5.5	30.0	15.0	12.0	303 Stainless Steel
20138141	M5	3.7	6.0	5.5	35.0	17.5	12.0	303 Stainless Steel
20138158	M5	3.7	6.0	5.5	40.0	24.0	12.0	303 Stainless Steel
20138165	M5	3.7	6.0	5.5	50.0	25.0	12.0	303 Stainless Steel
20181321	M5	3.7	6.0	5.5	16.0	8.0	12.0	316 Stainless Steel
20183967	M5	3.7	6.0	5.5	16.0	8.0	12.0	303 Stainless Steel
20184315	M5	3.7	6.0	5.5	16.0	8.0	12.0	316 Stainless Steel
20181338	M5	3.7	6.0	5.5	20.0	10.0	12.0	316 Stainless Steel
20183974	M5	3.7	6.0	5.5	20.0	10.0	12.0	303 Stainless Steel

Captive Thumb Screws - Long Head

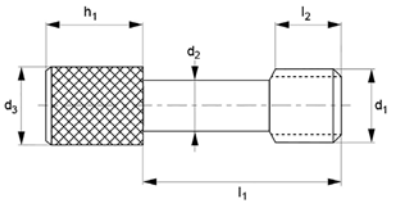



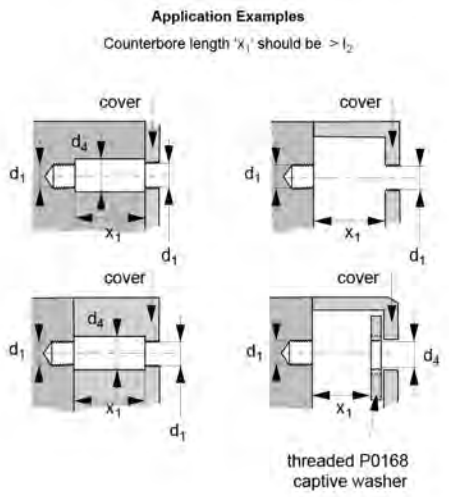



Part Number	d_1	d_2 ±0.12	d_3	d_4 min.	l_1±0.25	l_2±0.25	h_1	Material
20184322	M5	3.7	6.0	5.5	20.0	10.0	12.0	316 Stainless Steel
20181345	M5	3.7	6.0	5.5	25.0	12.5	12.0	316 Stainless Steel
20183981	M5	3.7	6.0	5.5	25.0	12.5	12.0	303 Stainless Steel
20184339	M5	3.7	6.0	5.5	25.0	12.5	12.0	316 Stainless Steel
20181352	M5	3.7	6.0	5.5	30.0	15.0	12.0	316 Stainless Steel
20183998	M5	3.7	6.0	5.5	30.0	15.0	12.0	303 Stainless Steel
20184346	M5	3.7	6.0	5.5	30.0	15.0	12.0	316 Stainless Steel
20181369	M5	3.7	6.0	5.5	35.0	17.5	12.0	316 Stainless Steel
20184001	M5	3.7	6.0	5.5	35.0	17.5	12.0	303 Stainless Steel
20184353	M5	3.7	6.0	5.5	35.0	17.5	12.0	316 Stainless Steel
20181376	M5	3.7	6.0	5.5	40.0	24.0	12.0	316 Stainless Steel
20184018	M5	3.7	6.0	5.5	40.0	24.0	12.0	303 Stainless Steel
20184360	M5	3.7	6.0	5.5	40.0	24.0	12.0	316 Stainless Steel
20181383	M5	3.7	6.0	5.5	50.0	25.0	12.0	316 Stainless Steel
20184025	M5	3.7	6.0	5.5	50.0	25.0	12.0	303 Stainless Steel
20184377	M5	3.7	6.0	5.5	50.0	25.0	12.0	316 Stainless Steel
20138172	M6	4.2	8.0	6.5	16.0	8.0	12.0	303 Stainless Steel
20138189	M6	4.2	8.0	6.5	20.0	10.0	12.0	303 Stainless Steel
20138196	M6	4.2	8.0	6.5	25.0	12.5	12.0	303 Stainless Steel
20138202	M6	4.2	8.0	6.5	30.0	15.0	12.0	303 Stainless Steel
20138219	M6	4.2	8.0	6.5	35.0	17.5	12.0	303 Stainless Steel
20138226	M6	4.2	8.0	6.5	40.0	20.0	12.0	303 Stainless Steel
20138233	M6	4.2	8.0	6.5	50.0	25.0	12.0	303 Stainless Steel

Captive Thumb Screws - Long Head

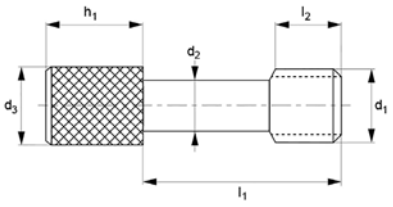

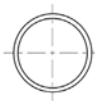

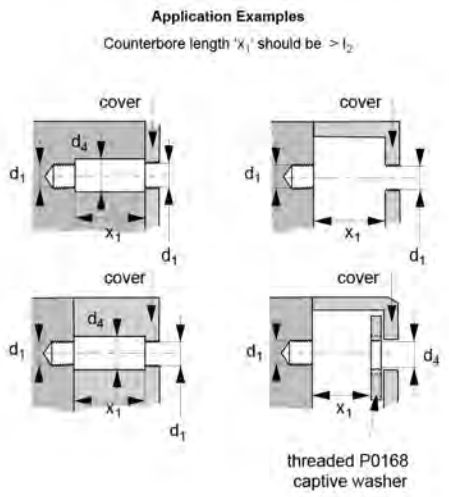



Part Number	d_1	d_2 ±0.12	d_3	d_4 min.	l_1±0.25	l_2±0.25	h_1	Material
20181390	M6	4.2	8.0	6.5	16.0	8.0	12.0	316 Stainless Steel
20184032	M6	4.2	8.0	6.5	16.0	8.0	12.0	303 Stainless Steel
20184384	M6	4.2	8.0	6.5	16.0	8.0	12.0	316 Stainless Steel
20181406	M6	4.2	8.0	6.5	20.0	10.0	12.0	316 Stainless Steel
20184049	M6	4.2	8.0	6.5	20.0	10.0	12.0	303 Stainless Steel
20184391	M6	4.2	8.0	6.5	20.0	10.0	12.0	316 Stainless Steel
20181413	M6	4.2	8.0	6.5	25.0	12.5	12.0	316 Stainless Steel
20184056	M6	4.2	8.0	6.5	25.0	12.5	12.0	303 Stainless Steel
20184407	M6	4.2	8.0	6.5	25.0	12.5	12.0	316 Stainless Steel
20181420	M6	4.2	8.0	6.5	30.0	15.0	12.0	316 Stainless Steel
20184063	M6	4.2	8.0	6.5	30.0	15.0	12.0	303 Stainless Steel
20184414	M6	4.2	8.0	6.5	30.0	15.0	12.0	316 Stainless Steel
20181437	M6	4.2	8.0	6.5	35.0	17.5	12.0	316 Stainless Steel
20184070	M6	4.2	8.0	6.5	35.0	17.5	12.0	303 Stainless Steel
20184421	M6	4.2	8.0	6.5	35.0	17.5	12.0	316 Stainless Steel
20181444	M6	4.2	8.0	6.5	40.0	20.0	12.0	316 Stainless Steel
20184087	M6	4.2	8.0	6.5	40.0	20.0	12.0	303 Stainless Steel
20184438	M6	4.2	8.0	6.5	40.0	20.0	12.0	316 Stainless Steel
20181451	M6	4.2	8.0	6.5	50.0	25.0	12.0	316 Stainless Steel
20184094	M6	4.2	8.0	6.5	50.0	25.0	12.0	303 Stainless Steel
20184445	M6	4.2	8.0	6.5	50.0	25.0	12.0	316 Stainless Steel
20140700	M8	6.0	10.0	8.5	16.0	8.0	16.0	303 Stainless Steel
20140717	M8	6.0	10.0	8.5	20.0	10.0	16.0	303 Stainless Steel

Captive Thumb Screws - Long Head

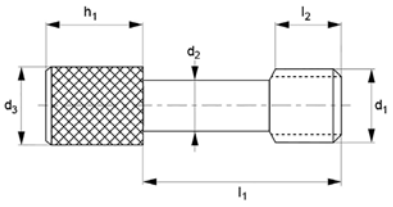



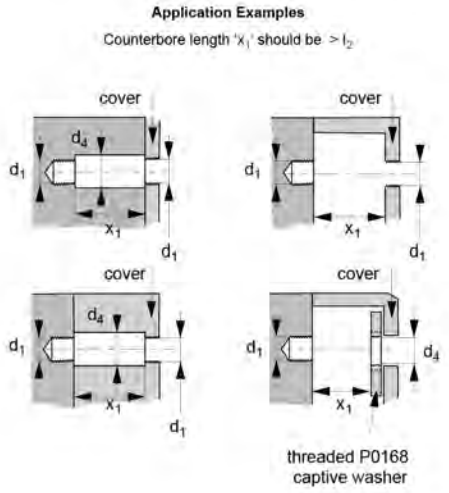



Part Number	d_1	d_2 ±0.12	d_3	d_4 min.	l_1±0.25	l_2±0.25	h_1	Material
20140724	M8	6.0	10.0	8.5	25.0	12.5	16.0	303 Stainless Steel
20140731	M8	6.0	10.0	8.5	30.0	15.0	16.0	303 Stainless Steel
20140748	M8	6.0	10.0	8.5	35.0	17.5	16.0	303 Stainless Steel
20140755	M8	6.0	10.0	8.5	40.0	20.0	16.0	303 Stainless Steel
20140762	M8	6.0	10.0	8.5	50.0	25.0	16.0	303 Stainless Steel

Captive Thumb Screws - Low Head

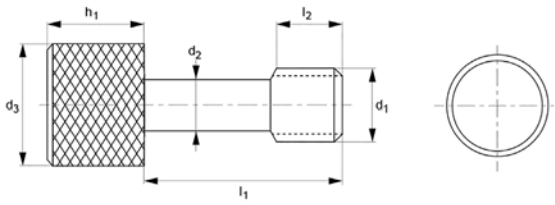

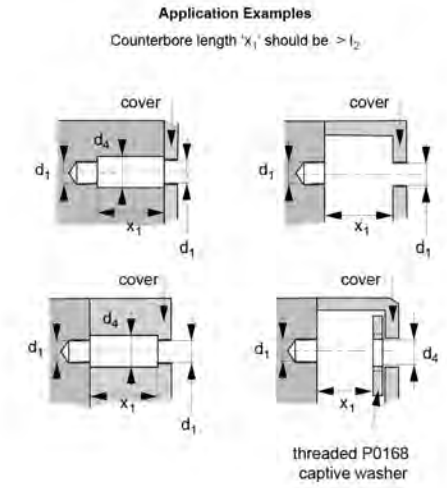



Features

- This range of Captive Thumb Screws features a low head. They are an ideal fitting solution for panels with non-threaded holes. Available in a choice of Blackened or Natural finishes.
- Made from austenitic Stainless Steel that provides good resistance to corrosion and machinability.
- The material is a popular choice for construction and automotive applications.

Specifications

Material: 316 Stainless Steel, 303 Stainless Steel

This range of Captive Thumb Screws features a low head. They are an ideal fitting solution for panels with non-threaded holes. They are used to comply with the Machinery Detective 2006/42/EC.

They are commonly used with Threaded Captive Washers (sold separately).

The screws are made from austenitic Stainless Steel that provides good resistance to corrosion and machinability, and you can find some of them with a blackened finish and others without. The material is a popular choice for construction and automotive applications.

Please Note: These screws have a smaller shank diameter and should not be tightened to the recommended torque for an equivalent screw of the displayed thread size.

Part Number	d_1	d_2 ±0.12	d_3	d_4 min.	l_1±0.25	l_2±0.25	h_1	Material
20138639	M3	2.0	8.0	3.5	8.0	4.5	5.0	303 Stainless Steel
20138646	M3	2.0	8.0	3.5	10.0	4.5	5.0	303 Stainless Steel
20138653	M3	2.0	8.0	3.5	12.0	4.5	5.0	303 Stainless Steel
20138981	M3	2.0	8.0	3.5	14.0	4.5	5.0	303 Stainless Steel
20138998	M3	2.0	8.0	3.5	16.0	4.5	5.0	303 Stainless Steel
20181468	M3	2.0	8.0	3.5	8.0	4.5	5.0	316 Stainless Steel

Captive Thumb Screws - Low Head

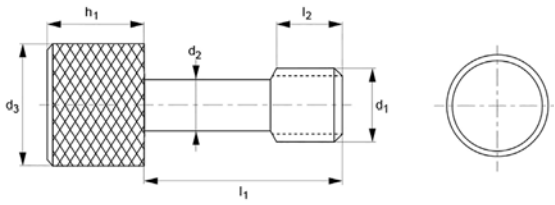

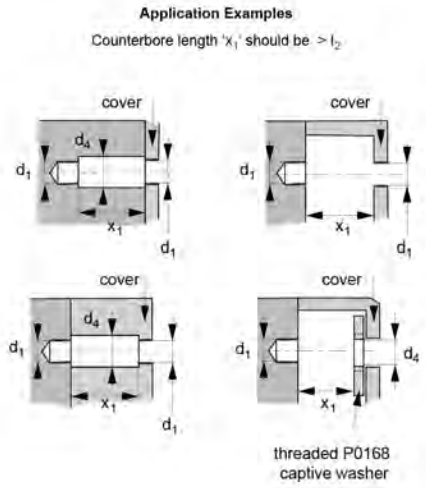



Part Number	d_1	d_2 ±0.12	d_3	d_4 min.	l_1±0.25	l_2±0.25	h_1	Material
20184452	M3	2.0	8.0	3.5	8.0	4.5	5.0	303 Stainless Steel
20184766	M3	2.0	8.0	3.5	8.0	4.5	5.0	316 Stainless Steel
20181475	M3	2.0	8.0	3.5	10.0	4.5	5.0	316 Stainless Steel
20184469	M3	2.0	8.0	3.5	10.0	4.5	5.0	303 Stainless Steel
20184773	M3	2.0	8.0	3.5	10.0	4.5	5.0	316 Stainless Steel
20181482	M3	2.0	8.0	3.5	12.0	4.5	5.0	316 Stainless Steel
20184476	M3	2.0	8.0	3.5	12.0	4.5	5.0	303 Stainless Steel
20184780	M3	2.0	8.0	3.5	12.0	4.5	5.0	316 Stainless Steel
20181499	M3	2.0	8.0	3.5	14.0	4.5	5.0	316 Stainless Steel
20184483	M3	2.0	8.0	3.5	14.0	4.5	5.0	303 Stainless Steel
20184797	M3	2.0	8.0	3.5	14.0	4.5	5.0	316 Stainless Steel
20181505	M3	2.0	8.0	3.5	16.0	4.5	5.0	316 Stainless Steel
20184490	M3	2.0	8.0	3.5	16.0	4.5	5.0	303 Stainless Steel
20184803	M3	2.0	8.0	3.5	16.0	4.5	5.0	316 Stainless Steel
20138660	M3.5	2.3	8.0	3.8	8.0	6.0	5.0	303 Stainless Steel
20138677	M3.5	2.3	8.0	3.8	10.0	6.0	5.0	303 Stainless Steel
20138684	M3.5	2.3	8.0	3.8	12.0	6.0	5.0	303 Stainless Steel
20139001	M3.5	2.3	8.0	3.8	14.0	6.0	5.0	303 Stainless Steel
20139018	M3.5	2.3	8.0	3.8	16.0	6.0	5.0	303 Stainless Steel
20181512	M3.5	2.3	8.0	3.8	8.0	6.0	5.0	316 Stainless Steel
20184506	M3.5	2.3	8.0	3.8	8.0	6.0	5.0	303 Stainless Steel
20184810	M3.5	2.3	8.0	3.8	8.0	6.0	5.0	316 Stainless Steel
20181529	M3.5	2.3	8.0	3.8	10.0	6.0	5.0	316 Stainless Steel

Captive Thumb Screws - Low Head

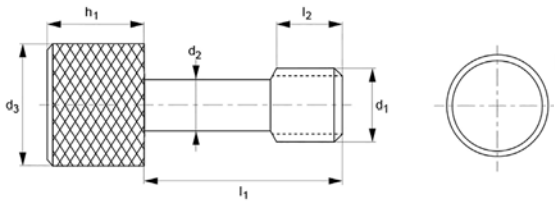

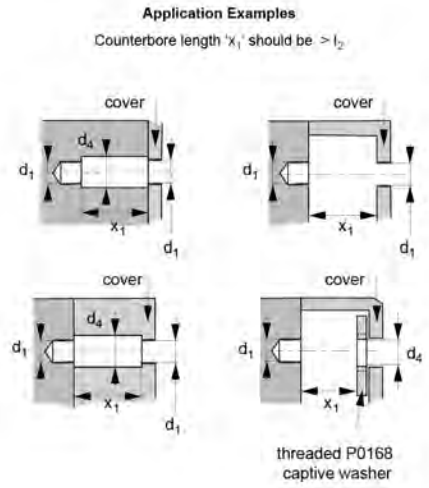



Part Number	d_1	d_2 ±0.12	d_3	d_4 min.	l_1±0.25	l_2±0.25	h_1	Material
20184513	M3.5	2.3	8.0	3.8	10.0	6.0	5.0	303 Stainless Steel
20184827	M3.5	2.3	8.0	3.8	10.0	6.0	5.0	316 Stainless Steel
20181536	M3.5	2.3	8.0	3.8	12.0	6.0	5.0	316 Stainless Steel
20184520	M3.5	2.3	8.0	3.8	12.0	6.0	5.0	303 Stainless Steel
20184834	M3.5	2.3	8.0	3.8	12.0	6.0	5.0	316 Stainless Steel
20181543	M3.5	2.3	8.0	3.8	14.0	6.0	5.0	316 Stainless Steel
20184537	M3.5	2.3	8.0	3.8	14.0	6.0	5.0	303 Stainless Steel
20184841	M3.5	2.3	8.0	3.8	14.0	6.0	5.0	316 Stainless Steel
20181550	M3.5	2.3	8.0	3.8	16.0	6.0	5.0	316 Stainless Steel
20184544	M3.5	2.3	8.0	3.8	16.0	6.0	5.0	303 Stainless Steel
20184858	M3.5	2.3	8.0	3.8	16.0	6.0	5.0	316 Stainless Steel
20138691	M4	2.8	10.0	4.5	10.0	6.0	5.0	303 Stainless Steel
20138707	M4	2.8	10.0	4.5	12.0	6.0	5.0	303 Stainless Steel
20138714	M4	2.8	10.0	4.5	16.0	6.0	5.0	303 Stainless Steel
20139025	M4	2.8	10.0	4.5	18.0	6.0	5.0	303 Stainless Steel
20139032	M4	2.8	10.0	4.5	20.0	6.0	5.0	303 Stainless Steel
20139049	M4	2.8	10.0	4.5	25.0	6.0	5.0	303 Stainless Steel
20139117	M4	2.8	10.0	4.5	14.0	6.0	5.0	303 Stainless Steel
20181567	M4	2.8	10.0	4.5	10.0	6.0	5.0	316 Stainless Steel
20184551	M4	2.8	10.0	4.5	10.0	6.0	5.0	303 Stainless Steel
20184865	M4	2.8	10.0	4.5	10.0	6.0	5.0	316 Stainless Steel
20181574	M4	2.8	10.0	4.5	12.0	6.0	5.0	316 Stainless Steel
20184568	M4	2.8	10.0	4.5	12.0	6.0	5.0	303 Stainless Steel

Captive Thumb Screws - Low Head

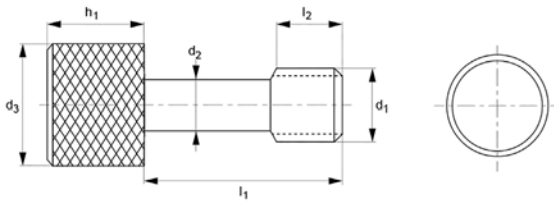

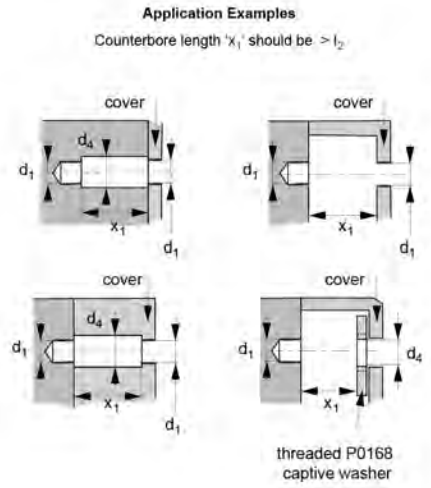



Part Number	d_1	d_2 ±0.12	d_3	d_4 min.	l_1±0.25	l_2±0.25	h_1	Material
20184872	M4	2.8	10.0	4.5	12.0	6.0	5.0	316 Stainless Steel
20181581	M4	2.8	10.0	4.5	14.0	6.0	5.0	316 Stainless Steel
20184575	M4	2.8	10.0	4.5	14.0	6.0	5.0	303 Stainless Steel
20184889	M4	2.8	10.0	4.5	14.0	6.0	5.0	316 Stainless Steel
20181598	M4	2.8	10.0	4.5	16.0	6.0	5.0	316 Stainless Steel
20184582	M4	2.8	10.0	4.5	16.0	6.0	5.0	303 Stainless Steel
20184896	M4	2.8	10.0	4.5	16.0	6.0	5.0	316 Stainless Steel
20181604	M4	2.8	10.0	4.5	18.0	6.0	5.0	316 Stainless Steel
20184599	M4	2.8	10.0	4.5	18.0	6.0	5.0	303 Stainless Steel
20184902	M4	2.8	10.0	4.5	18.0	6.0	5.0	316 Stainless Steel
20181611	M4	2.8	10.0	4.5	20.0	6.0	5.0	316 Stainless Steel
20184605	M4	2.8	10.0	4.5	20.0	6.0	5.0	303 Stainless Steel
20184919	M4	2.8	10.0	4.5	20.0	6.0	5.0	316 Stainless Steel
20181628	M4	2.8	10.0	4.5	25.0	6.0	5.0	316 Stainless Steel
20184612	M4	2.8	10.0	4.5	25.0	6.0	5.0	303 Stainless Steel
20184926	M4	2.8	10.0	4.5	25.0	6.0	5.0	316 Stainless Steel
20138721	M5	3.7	10.0	5.5	10.0	7.5	5.0	303 Stainless Steel
20138738	M5	3.7	10.0	5.5	12.0	7.5	5.0	303 Stainless Steel
20138745	M5	3.7	10.0	5.5	16.0	7.5	5.0	303 Stainless Steel
20139056	M5	3.7	10.0	5.5	14.0	7.5	5.0	303 Stainless Steel
20139063	M5	3.7	10.0	5.5	20.0	7.5	5.0	303 Stainless Steel
20139070	M5	3.7	10.0	5.5	25.0	7.5	5.0	303 Stainless Steel

Captive Thumb Screws - Low Head

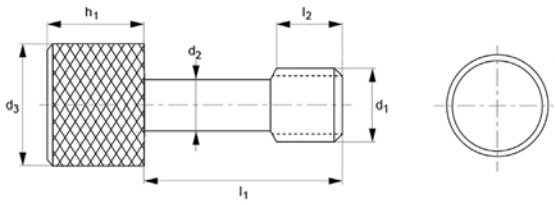

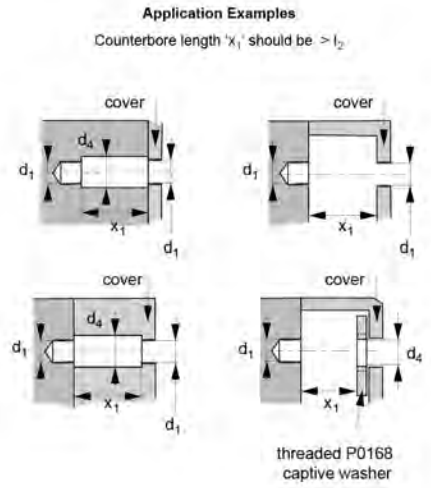



Part Number	d_1	d_2 ±0.12	d_3	d_4 min.	l_1±0.25	l_2±0.25	h_1	Material
20139087	M5	3.7	10.0	5.5	30.0	7.5	5.0	303 Stainless Steel
20140625	M5	3.7	10.0	5.5	18.0	7.5	5.0	303 Stainless Steel
20181635	M5	3.7	10.0	5.5	10.0	7.5	5.0	316 Stainless Steel
20184629	M5	3.7	10.0	5.5	10.0	7.5	5.0	303 Stainless Steel
20184933	M5	3.7	10.0	5.5	10.0	7.5	5.0	316 Stainless Steel
20181642	M5	3.7	10.0	5.5	12.0	7.5	5.0	316 Stainless Steel
20184636	M5	3.7	10.0	5.5	12.0	7.5	5.0	303 Stainless Steel
20184940	M5	3.7	10.0	5.5	12.0	7.5	5.0	316 Stainless Steel
20181109	M5	3.7	10.0	5.5	14.0	7.5	5.0	316 Stainless Steel
20184643	M5	3.7	10.0	5.5	14.0	7.5	5.0	303 Stainless Steel
20184957	M5	3.7	10.0	5.5	14.0	7.5	5.0	316 Stainless Steel
20181659	M5	3.7	10.0	5.5	16.0	7.5	5.0	316 Stainless Steel
20184650	M5	3.7	10.0	5.5	16.0	7.5	5.0	303 Stainless Steel
20184964	M5	3.7	10.0	5.5	16.0	7.5	5.0	316 Stainless Steel
20188184	M5	3.7	10.0	5.5	18.0	7.5	5.0	316 Stainless Steel
20186081	M5	3.7	10.0	5.5	18.0	7.5	5.0	303 Stainless Steel
20188191	M5	3.7	10.0	5.5	18.0	7.5	5.0	316 Stainless Steel
20181666	M5	3.7	10.0	5.5	20.0	7.5	5.0	316 Stainless Steel
20184667	M5	3.7	10.0	5.5	20.0	7.5	5.0	303 Stainless Steel
20184971	M5	3.7	10.0	5.5	20.0	7.5	5.0	316 Stainless Steel
20181673	M5	3.7	10.0	5.5	25.0	7.5	5.0	316 Stainless Steel
20184674	M5	3.7	10.0	5.5	25.0	7.5	5.0	303 Stainless Steel
20184988	M5	3.7	10.0	5.5	25.0	7.5	5.0	316 Stainless Steel

Captive Thumb Screws - Low Head

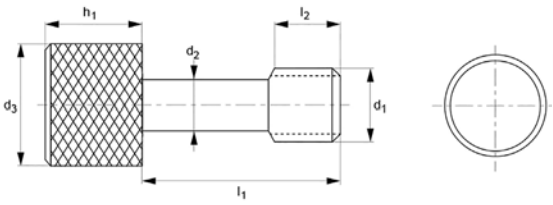

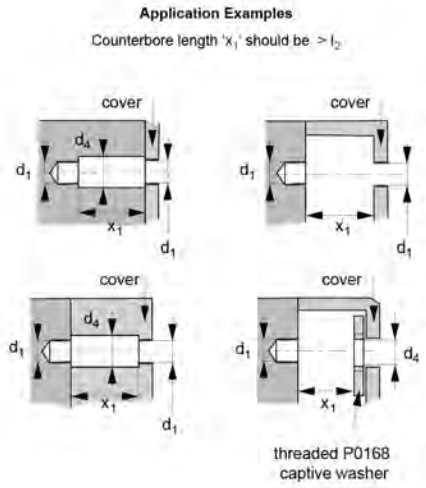



Part Number	d_1	d_2 ±0.12	d_3	d_4 min.	l_1±0.25	l_2±0.25	h_1	Material
20181680	M5	3.7	10.0	5.5	30.0	7.5	5.0	316 Stainless Steel
20184681	M5	3.7	10.0	5.5	30.0	7.5	5.0	303 Stainless Steel
20184995	M5	3.7	10.0	5.5	30.0	7.5	5.0	316 Stainless Steel
20138752	M6	4.5	12.0	6.5	12.0	7.5	6.0	303 Stainless Steel
20138769	M6	4.5	12.0	6.5	16.0	7.5	6.0	303 Stainless Steel
20138776	M6	4.5	12.0	6.5	18.0	7.5	6.0	303 Stainless Steel
20138783	M6	4.5	12.0	6.5	20.0	7.5	6.0	303 Stainless Steel
20138790	M6	4.5	12.0	6.5	25.0	7.5	6.0	303 Stainless Steel
20139094	M6	4.5	12.0	6.5	14.0	7.5	6.0	303 Stainless Steel
20139100	M6	4.5	12.0	6.5	30.0	7.5	6.0	303 Stainless Steel
20181840	M6	4.5	12.0	6.5	12.0	7.5	6.0	316 Stainless Steel
20184698	M6	4.5	12.0	6.5	12.0	7.5	6.0	303 Stainless Steel
20185008	M6	4.5	12.0	6.5	12.0	7.5	6.0	316 Stainless Steel
20181697	M6	4.5	12.0	6.5	14.0	7.5	6.0	316 Stainless Steel
20184704	M6	4.5	12.0	6.5	14.0	7.5	6.0	303 Stainless Steel
20185015	M6	4.5	12.0	6.5	14.0	7.5	6.0	316 Stainless Steel
20181703	M6	4.5	12.0	6.5	16.0	7.5	6.0	316 Stainless Steel
20184711	M6	4.5	12.0	6.5	16.0	7.5	6.0	303 Stainless Steel
20185022	M6	4.5	12.0	6.5	16.0	7.5	6.0	316 Stainless Steel
20181710	M6	4.5	12.0	6.5	18.0	7.5	6.0	316 Stainless Steel
20184728	M6	4.5	12.0	6.5	18.0	7.5	6.0	303 Stainless Steel
20185039	M6	4.5	12.0	6.5	18.0	7.5	6.0	316 Stainless Steel
20181727	M6	4.5	12.0	6.5	20.0	7.5	6.0	316 Stainless Steel

Captive Thumb Screws - Low Head

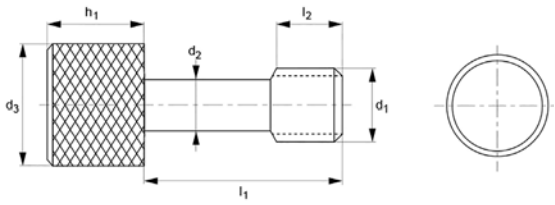

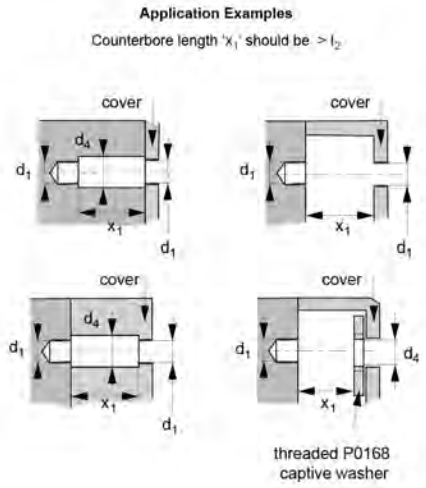



Part Number	d_1	d_2 ±0.12	d_3	d_4 min.	l_1±0.25	l_2±0.25	h_1	Material
20184735	M6	4.5	12.0	6.5	20.0	7.5	6.0	303 Stainless Steel
20185046	M6	4.5	12.0	6.5	20.0	7.5	6.0	316 Stainless Steel
20181734	M6	4.5	12.0	6.5	25.0	7.5	6.0	316 Stainless Steel
20184742	M6	4.5	12.0	6.5	25.0	7.5	6.0	303 Stainless Steel
20185053	M6	4.5	12.0	6.5	25.0	7.5	6.0	316 Stainless Steel
20181741	M6	4.5	12.0	6.5	30.0	7.5	6.0	316 Stainless Steel
20184759	M6	4.5	12.0	6.5	30.0	7.5	6.0	303 Stainless Steel
20185060	M6	4.5	12.0	6.5	30.0	7.5	6.0	316 Stainless Steel
20140649	M8	6.0	16.0	8.5	16.0	10.0	8.0	303 Stainless Steel
20140656	M8	6.0	16.0	8.5	18.0	10.0	8.0	303 Stainless Steel
20140663	M8	6.0	16.0	8.5	20.0	10.0	8.0	303 Stainless Steel
20140670	M8	6.0	16.0	8.5	25.0	10.0	8.0	303 Stainless Steel
20140687	M8	6.0	16.0	8.5	30.0	10.0	8.0	303 Stainless Steel
20140694	M8	6.0	16.0	8.5	35.0	10.0	8.0	303 Stainless Steel
20189990	M8	6.0	16.0	8.5	16.0	10.0	8.0	316 Stainless Steel
20190057	M8	6.0	16.0	8.5	16.0	10.0	8.0	303 Stainless Steel
20190118	M8	6.0	16.0	8.5	16.0	10.0	8.0	316 Stainless Steel
20190002	M8	6.0	16.0	8.5	18.0	10.0	8.0	316 Stainless Steel
20190064	M8	6.0	16.0	8.5	18.0	10.0	8.0	303 Stainless Steel
20190125	M8	6.0	16.0	8.5	18.0	10.0	8.0	316 Stainless Steel
20190019	M8	6.0	16.0	8.5	20.0	10.0	8.0	316 Stainless Steel
20190071	M8	6.0	16.0	8.5	20.0	10.0	8.0	303 Stainless Steel
20190132	M8	6.0	16.0	8.5	20.0	10.0	8.0	316 Stainless Steel

Captive Thumb Screws - Low Head

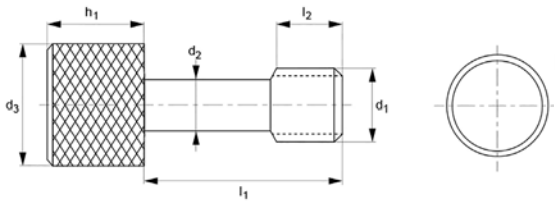

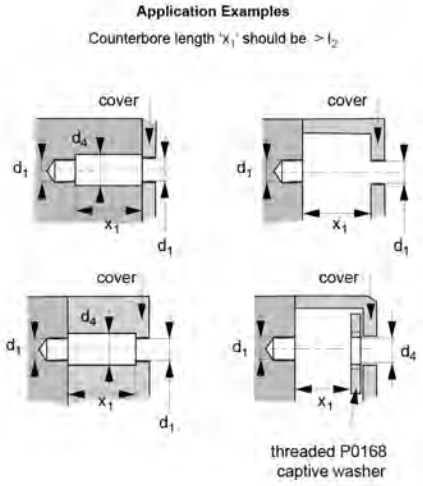



Part Number	d_1	d_2 ±0.12	d_3	d_4 min.	l_1±0.25	l_2±0.25	h_1	Material
20190026	M8	6.0	16.0	8.5	25.0	10.0	8.0	316 Stainless Steel
20190088	M8	6.0	16.0	8.5	25.0	10.0	8.0	303 Stainless Steel
20190149	M8	6.0	16.0	8.5	25.0	10.0	8.0	316 Stainless Steel
20190033	M8	6.0	16.0	8.5	30.0	10.0	8.0	316 Stainless Steel
20190095	M8	6.0	16.0	8.5	30.0	10.0	8.0	303 Stainless Steel
20190156	M8	6.0	16.0	8.5	30.0	10.0	8.0	316 Stainless Steel
20190040	M8	6.0	16.0	8.5	35.0	10.0	8.0	316 Stainless Steel
20190101	M8	6.0	16.0	8.5	35.0	10.0	8.0	303 Stainless Steel
20190163	M8	6.0	16.0	8.5	35.0	10.0	8.0	316 Stainless Steel

Captive Thumb Screws - Low Head with Slot

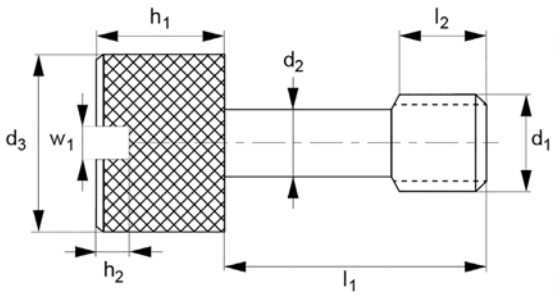

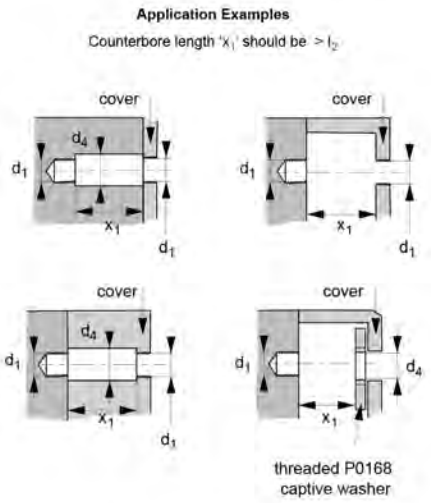



Features

- An ideal fitting solution for panels with non-threaded holes.
- Made from austenitic Stainless Steel that provides good resistance to corrosion and machinability
- Used to comply with the Machinery Detective 2006/42/EC.

Specifications

Material: 316 Stainless Steel, 303 Stainless Steel

This range of Captive Thumb Screws features a low head with a slotted drive. Slotted drives accept standard blade screwdrivers and require less downward pressure to drive parts, than those with recessed openings. An appropriately fitted blade should be used to minimise slippage.

These screws are an ideal fitting solution for panels with non-threaded holes. They are used to comply with the Machinery Detective 2006/42/EC. They are commonly used with Threaded Captive Washers (sold separately).

The screws are made from austenitic Stainless Steel that provides good resistance to corrosion and machinability, and you can findsome of them with a blackened finish and others without. The material is a popular choice for construction and automotive applications.

Please Note: These screws have a smaller shank diameter and should not be tightened to the recommended torque for an equivalent screw of the displayed thread size.

Captive Thumb Screws - Low Head with Slot

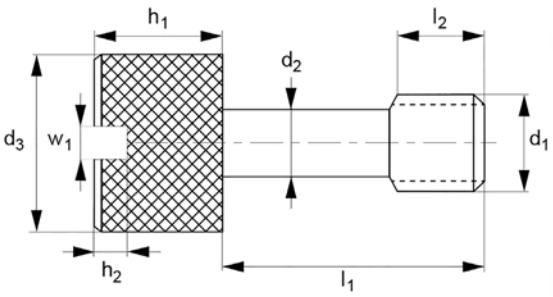

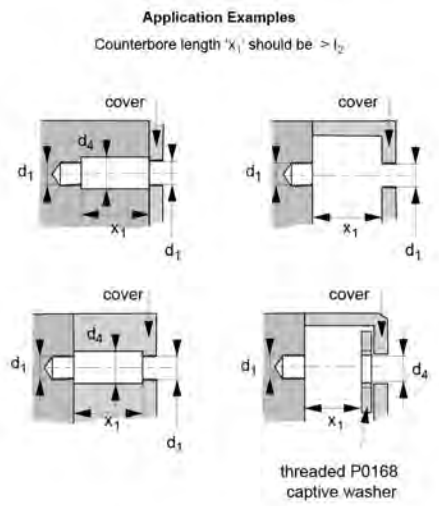



Part Number	d_1	l_1±0.25	d_2 ±0.12	l_2±0.25	d_3	h_1	Material
20139186	M3	8.0	2.0	4.5	8.0	5.0	303 Stainless Steel
20139216	M3	10.0	2.0	4.5	8.0	5.0	303 Stainless Steel
20139223	M3	12.0	2.0	4.5	8.0	5.0	303 Stainless Steel
20139230	M3	14.0	2.0	4.5	8.0	5.0	303 Stainless Steel
20139247	M3	16.0	2.0	4.5	8.0	5.0	303 Stainless Steel
20181901	M3	8.0	2.0	4.5	8.0	5.0	316 Stainless Steel
20185077	M3	8.0	2.0	4.5	8.0	5.0	303 Stainless Steel
20188207	M3	8.0	2.0	4.5	8.0	5.0	316 Stainless Steel
20181918	M3	10.0	2.0	4.5	8.0	5.0	316 Stainless Steel
20185084	M3	10.0	2.0	4.5	8.0	5.0	303 Stainless Steel
20188214	M3	10.0	2.0	4.5	8.0	5.0	316 Stainless Steel
20181925	M3	12.0	2.0	4.5	8.0	5.0	316 Stainless Steel
20185091	M3	12.0	2.0	4.5	8.0	5.0	303 Stainless Steel
20188221	M3	12.0	2.0	4.5	8.0	5.0	316 Stainless Steel
20181932	M3	14.0	2.0	4.5	8.0	5.0	316 Stainless Steel
20185107	M3	14.0	2.0	4.5	8.0	5.0	303 Stainless Steel
20188238	M3	14.0	2.0	4.5	8.0	5.0	316 Stainless Steel
20181949	M3	16.0	2.0	4.5	8.0	5.0	316 Stainless Steel
20185114	M3	16.0	2.0	4.5	8.0	5.0	303 Stainless Steel
20188245	M3	16.0	2.0	4.5	8.0	5.0	316 Stainless Steel
20139254	M4	10.0	2.8	6.0	10.0	5.0	303 Stainless Steel

Captive Thumb Screws - Low Head with Slot

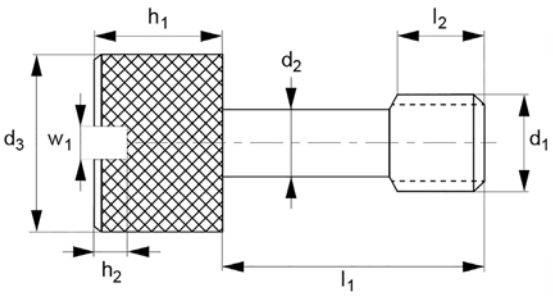

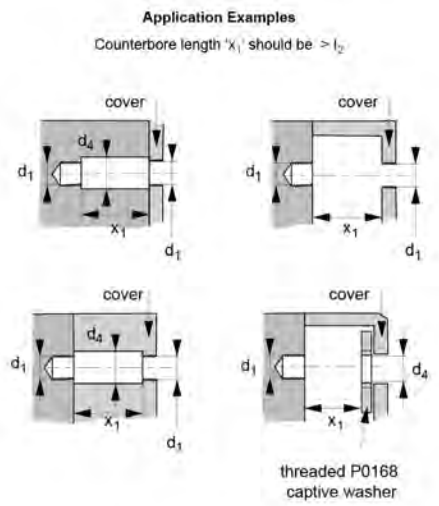



Part Number	d_1	l_1±0.25	d_2 ±0.12	l_2±0.25	d_3	h_1	Material
20139261	M4	12.0	2.8	6.0	10.0	5.0	303 Stainless Steel
20139278	M4	14.0	2.8	6.0	10.0	5.0	303 Stainless Steel
20139285	M4	16.0	2.8	6.0	10.0	5.0	303 Stainless Steel
20139292	M4	18.0	2.8	6.0	10.0	5.0	303 Stainless Steel
20139308	M4	20.0	2.8	6.0	10.0	5.0	303 Stainless Steel
20139315	M4	25.0	2.8	6.0	10.0	5.0	303 Stainless Steel
20181956	M4	10.0	2.8	6.0	10.0	5.0	316 Stainless Steel
20185121	M4	10.0	2.8	6.0	10.0	5.0	303 Stainless Steel
20188252	M4	10.0	2.8	6.0	10.0	5.0	316 Stainless Steel
20181963	M4	12.0	2.8	6.0	10.0	5.0	316 Stainless Steel
20185138	M4	12.0	2.8	6.0	10.0	5.0	303 Stainless Steel
20188269	M4	12.0	2.8	6.0	10.0	5.0	316 Stainless Steel
20181970	M4	14.0	2.8	6.0	10.0	5.0	316 Stainless Steel
20185145	M4	14.0	2.8	6.0	10.0	5.0	303 Stainless Steel
20188276	M4	14.0	2.8	6.0	10.0	5.0	316 Stainless Steel
20181987	M4	16.0	2.8	6.0	10.0	5.0	316 Stainless Steel
20185152	M4	16.0	2.8	6.0	10.0	5.0	303 Stainless Steel
20188283	M4	16.0	2.8	6.0	10.0	5.0	316 Stainless Steel
20181994	M4	18.0	2.8	6.0	10.0	5.0	316 Stainless Steel
20185169	M4	18.0	2.8	6.0	10.0	5.0	303 Stainless Steel
20188290	M4	18.0	2.8	6.0	10.0	5.0	316 Stainless Steel

Captive Thumb Screws - Low Head with Slot

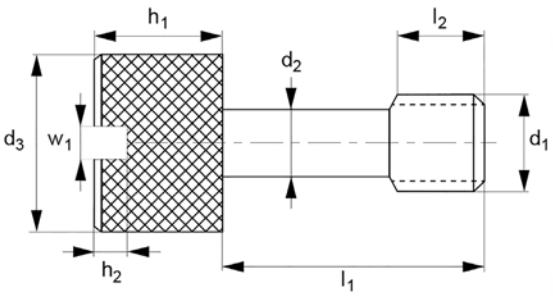

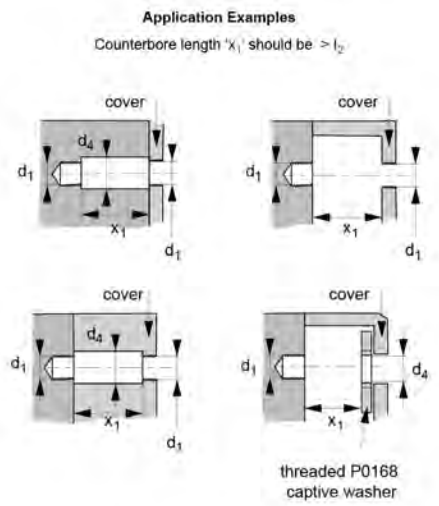



Part Number	d_1	l_1±0.25	d_2 ±0.12	l_2±0.25	d_3	h_1	Material
20182007	M4	20.0	2.8	6.0	10.0	5.0	316 Stainless Steel
20185176	M4	20.0	2.8	6.0	10.0	5.0	303 Stainless Steel
20188306	M4	20.0	2.8	6.0	10.0	5.0	316 Stainless Steel
20182014	M4	25.0	2.8	6.0	10.0	5.0	316 Stainless Steel
20185183	M4	25.0	2.8	6.0	10.0	5.0	303 Stainless Steel
20188313	M4	25.0	2.8	6.0	10.0	5.0	316 Stainless Steel
20139322	M5	10.0	3.7	7.5	10.0	5.0	303 Stainless Steel
20139339	M5	12.0	3.7	7.5	10.0	5.0	303 Stainless Steel
20139346	M5	14.0	3.7	7.5	10.0	5.0	303 Stainless Steel
20139353	M5	16.0	3.7	7.5	10.0	5.0	303 Stainless Steel
20139360	M5	18.0	3.7	7.5	10.0	5.0	303 Stainless Steel
20139377	M5	20.0	3.7	7.5	10.0	5.0	303 Stainless Steel
20139384	M5	25.0	3.7	7.5	10.0	5.0	303 Stainless Steel
20139391	M5	30.0	3.7	7.5	10.0	5.0	303 Stainless Steel
20182021	M5	10.0	3.7	7.5	10.0	5.0	316 Stainless Steel
20185190	M5	10.0	3.7	7.5	10.0	5.0	303 Stainless Steel
20188320	M5	10.0	3.7	7.5	10.0	5.0	316 Stainless Steel
20182038	M5	12.0	3.7	7.5	10.0	5.0	316 Stainless Steel
20185206	M5	12.0	3.7	7.5	10.0	5.0	303 Stainless Steel
20188337	M5	12.0	3.7	7.5	10.0	5.0	316 Stainless Steel
20182045	M5	14.0	3.7	7.5	10.0	5.0	316 Stainless Steel

Captive Thumb Screws - Low Head with Slot

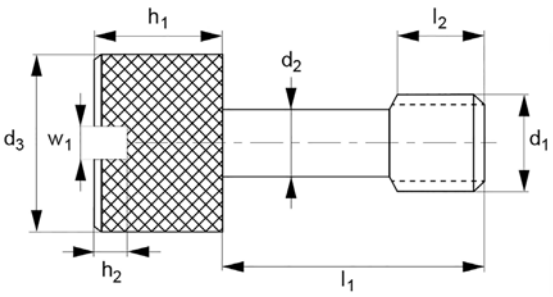

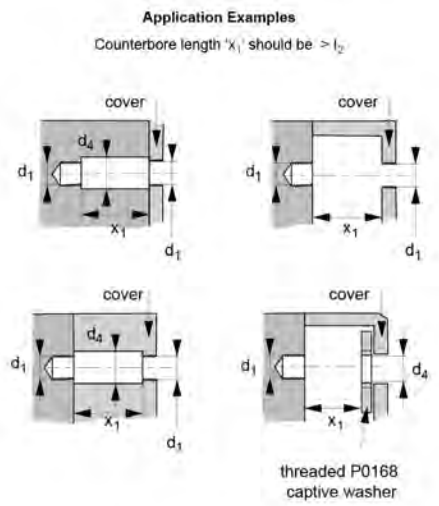



Part Number	d_1	l_1±0.25	d_2 ±0.12	l_2±0.25	d_3	h_1	Material
20185213	M5	14.0	3.7	7.5	10.0	5.0	303 Stainless Steel
20188344	M5	14.0	3.7	7.5	10.0	5.0	316 Stainless Steel
20182052	M5	16.0	3.7	7.5	10.0	5.0	316 Stainless Steel
20185220	M5	16.0	3.7	7.5	10.0	5.0	303 Stainless Steel
20188351	M5	16.0	3.7	7.5	10.0	5.0	316 Stainless Steel
20182069	M5	18.0	3.7	7.5	10.0	5.0	316 Stainless Steel
20185237	M5	18.0	3.7	7.5	10.0	5.0	303 Stainless Steel
20188368	M5	18.0	3.7	7.5	10.0	5.0	316 Stainless Steel
20182076	M5	20.0	3.7	7.5	10.0	5.0	316 Stainless Steel
20185244	M5	20.0	3.7	7.5	10.0	5.0	303 Stainless Steel
20188375	M5	20.0	3.7	7.5	10.0	5.0	316 Stainless Steel
20182083	M5	25.0	3.7	7.5	10.0	5.0	316 Stainless Steel
20185251	M5	25.0	3.7	7.5	10.0	5.0	303 Stainless Steel
20188382	M5	25.0	3.7	7.5	10.0	5.0	316 Stainless Steel
20182090	M5	30.0	3.7	7.5	10.0	5.0	316 Stainless Steel
20185268	M5	30.0	3.7	7.5	10.0	5.0	303 Stainless Steel
20188399	M5	30.0	3.7	7.5	10.0	5.0	316 Stainless Steel
20139155	M6	16.0	4.5	7.5	12.0	6.0	303 Stainless Steel
20139407	M6	12.0	4.5	7.5	12.0	6.0	303 Stainless Steel
20139414	M6	14.0	4.5	7.5	12.0	6.0	303 Stainless Steel
20139421	M6	18.0	4.5	7.5	12.0	6.0	303 Stainless Steel

Captive Thumb Screws - Low Head with Slot

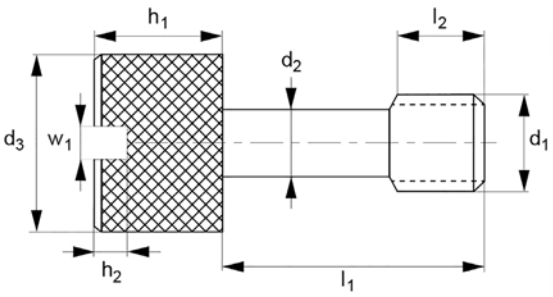

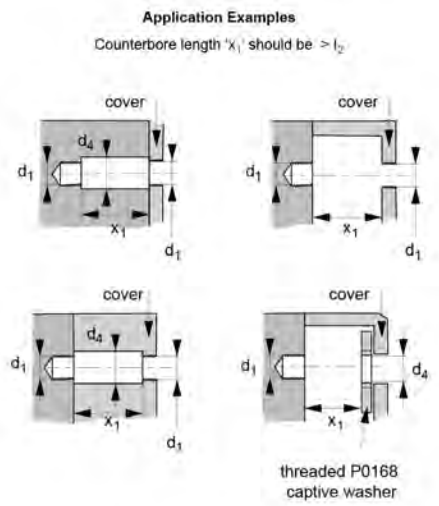



Part Number	d_1	l_1±0.25	d_2 ±0.12	l_2±0.25	d_3	h_1	Material
20139438	M6	20.0	4.5	7.5	12.0	6.0	303 Stainless Steel
20139445	M6	25.0	4.5	7.5	12.0	6.0	303 Stainless Steel
20139452	M6	30.0	4.5	7.5	12.0	6.0	303 Stainless Steel
20182106	M6	12.0	4.5	7.5	12.0	6.0	316 Stainless Steel
20185275	M6	12.0	4.5	7.5	12.0	6.0	303 Stainless Steel
20188405	M6	12.0	4.5	7.5	12.0	6.0	316 Stainless Steel
20182113	M6	14.0	4.5	7.5	12.0	6.0	316 Stainless Steel
20185282	M6	14.0	4.5	7.5	12.0	6.0	303 Stainless Steel
20188412	M6	14.0	4.5	7.5	12.0	6.0	316 Stainless Steel
20182120	M6	16.0	4.5	7.5	12.0	6.0	316 Stainless Steel
20185299	M6	16.0	4.5	7.5	12.0	6.0	303 Stainless Steel
20188429	M6	16.0	4.5	7.5	12.0	6.0	316 Stainless Steel
20182137	M6	18.0	4.5	7.5	12.0	6.0	316 Stainless Steel
20185305	M6	18.0	4.5	7.5	12.0	6.0	303 Stainless Steel
20188436	M6	18.0	4.5	7.5	12.0	6.0	316 Stainless Steel
20182144	M6	20.0	4.5	7.5	12.0	6.0	316 Stainless Steel
20185312	M6	20.0	4.5	7.5	12.0	6.0	303 Stainless Steel
20188443	M6	20.0	4.5	7.5	12.0	6.0	316 Stainless Steel
20182151	M6	25.0	4.5	7.5	12.0	6.0	316 Stainless Steel
20185329	M6	25.0	4.5	7.5	12.0	6.0	303 Stainless Steel
20188450	M6	25.0	4.5	7.5	12.0	6.0	316 Stainless Steel

Captive Thumb Screws - Low Head with Slot

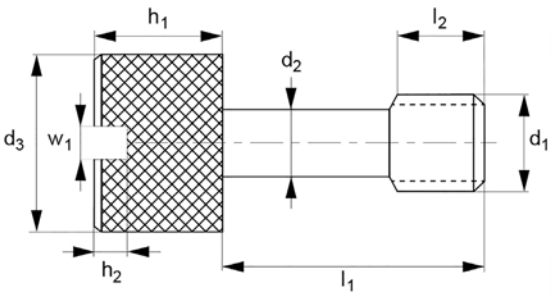

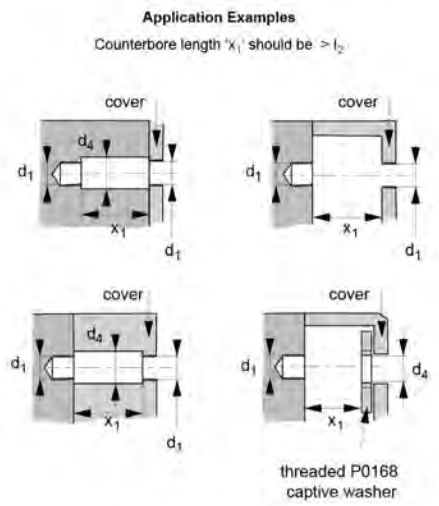



Part Number	d_1	l_1±0.25	d_2 ±0.12	l_2±0.25	d_3	h_1	Material
20182168	M6	30.0	4.5	7.5	12.0	6.0	316 Stainless Steel
20185336	M6	30.0	4.5	7.5	12.0	6.0	303 Stainless Steel
20188467	M6	30.0	4.5	7.5	12.0	6.0	316 Stainless Steel

Threaded Captive Washers

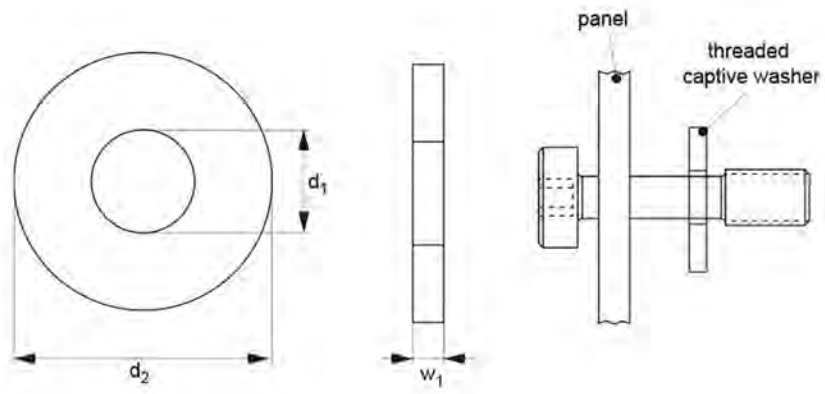



Features

- Captive Washers has a very shallow thread on the inside diameter.
- Once past the threads they will not separate from the captive screw or bolt.
- Screw mounted.

Specifications

Material: 303 Stainless Steel, 316 Stainless Steel

This range of Captive Washers has a very shallow thread on the inside diameter. This means they can be screwed on, and once past the threads they will not separate from the captive screw or bolt.

How to install a captive screw and washer assembly;
1) Place the captive screw into the panel hole.
2) Thread the washer on to the screw, beyond the threaded part of the screw, which retains the screw in the panel.

The washers are made from Stainless Steel that provides good resistance to corrosion and machinability. The material is a popular choice for construction and automotive applications.

Threaded Captive Washers

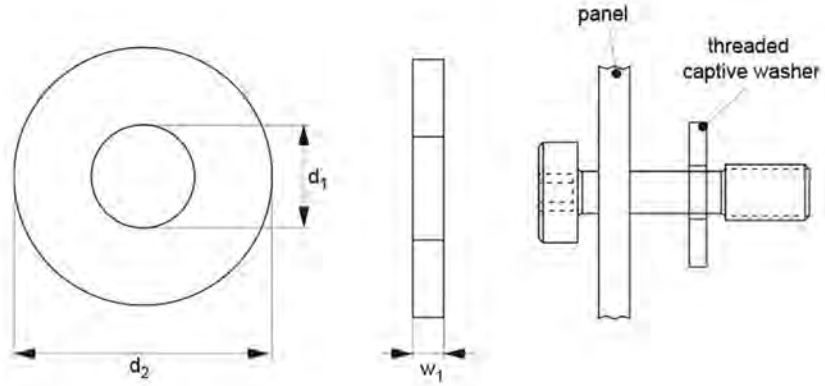



Part Number	d_1	d_2	w_1 ±0.05	Material
20145620	M3	6.0	1.0	303 Stainless Steel
20145637	M3.5	8.0	1.2	303 Stainless Steel
20145644	M4	8.0	1.2	303 Stainless Steel
20145651	M5	10.0	1.5	303 Stainless Steel
20145668	M6	12.0	1.6	303 Stainless Steel
20145675	M8	16.0	2.0	303 Stainless Steel
20145682	M2.5	5.0	1.0	303 Stainless Steel
20145699	M10	20.0	3.0	303 Stainless Steel
20145705	M12	24.0	3.5	303 Stainless Steel
20145712	M6	12.0	1.6	316 Stainless Steel
20145729	M8	16.0	2.0	316 Stainless Steel
20145767	M5	10.0	1.5	316 Stainless Steel
20145774	M12	24.0	3.5	316 Stainless Steel
20145781	M2.5	5.0	1.0	316 Stainless Steel
20145798	M3	6.0	1.0	316 Stainless Steel
20145804	M3.5	8.0	1.2	316 Stainless Steel
20145811	M4	8.0	1.2	316 Stainless Steel
20145828	M10	20.0	3.0	316 Stainless Steel
20146009	M16	32.0	4.0	316 Stainless Steel
20146016	M20	40.0	5.0	316 Stainless Steel
20146429	M16	32.0	4.0	303 Stainless Steel
20146528	M20	40.0	5.0	303 Stainless Steel

Shoulder Screws - Ultra Low Head

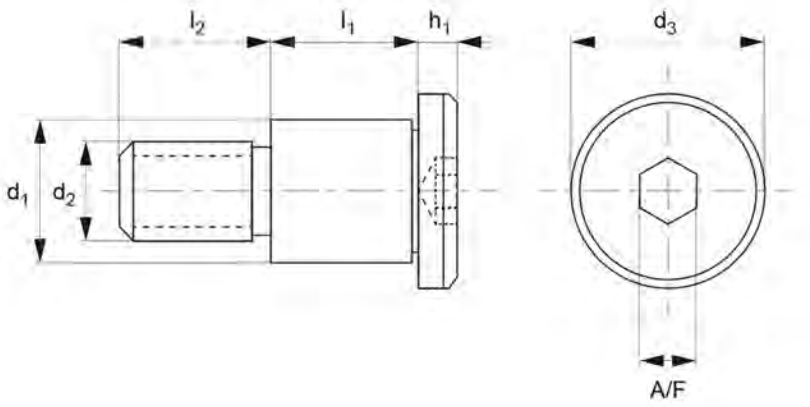



Features

- The head height dimensions of these very low profile screws is approximately 1/3 that of normal shoulder screws.
- Features a hexagonal drives that is ideal for precision assembly and where less surface area is available.
- Suitable for pharmaceutical and other applications.

Specifications

Material: 316 Stainless Steel
303 Stainless Steel

This range of Shoulder Screws feature an ultra low head with a hexagonal socket drive. The head height dimensions of these very low profile screws is approximately 1/3 that of normal shoulder screws. Hexagonal drives are ideal for precision assembly and are ideally used where less surface area is available.

They are made from austenitic Stainless Steel that provides good resistance to corrosion and machinability. The material is a popular choice for construction and automotive applications. These screws are suitable for pharmaceutical and other applications.

Shoulder Screws - Ultra Low Head

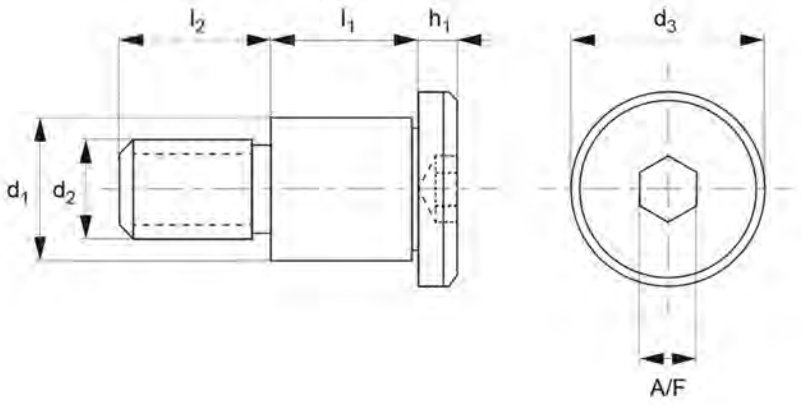



Part Number	d_1+0|-0.025	l_1+0.05|-0.0	d_3	l_2	d_2	h_1	A/F
20142612	4.0	4.0	6.0	4.0	M3	1.3	2.0
20142629	4.0	5.0	6.0	4.0	M3	1.3	2.0
20142636	4.0	6.0	6.0	4.0	M3	1.3	2.0
20142643	4.0	8.0	6.0	4.0	M3	1.3	2.0
20142650	4.0	10.0	6.0	4.0	M3	1.3	2.0
20144739	4.0	16.0	6.0	4.0	M3	1.3	2.0
20144746	4.0	12.0	6.0	4.0	M3	1.3	2.0
20144753	4.0	20.0	6.0	4.0	M3	1.3	2.0
20224769	4.0	4.0	6.0	4.0	M3	1.3	2.0
20224776	4.0	5.0	6.0	4.0	M3	1.3	2.0
20224783	4.0	6.0	6.0	4.0	M3	1.3	2.0
20224790	4.0	8.0	6.0	4.0	M3	1.3	2.0
20224806	4.0	10.0	6.0	4.0	M3	1.3	2.0
20228989	4.0	12.0	6.0	4.0	M3	1.3	2.0
20228996	4.0	16.0	6.0	4.0	M3	1.3	2.0
20229009	4.0	20.0	6.0	4.0	M3	1.3	2.0
20232450	4.0	4.0	6.0	4.0	M3	1.3	2.0
20232467	4.0	5.0	6.0	4.0	M3	1.3	2.0
20232474	4.0	6.0	6.0	4.0	M3	1.3	2.0
20232481	4.0	8.0	6.0	4.0	M3	1.3	2.0
20232498	4.0	10.0	6.0	4.0	M3	1.3	2.0
20232504	4.0	12.0	6.0	4.0	M3	1.3	2.0
20232511	4.0	16.0	6.0	4.0	M3	1.3	2.0

Shoulder Screws - Ultra Low Head

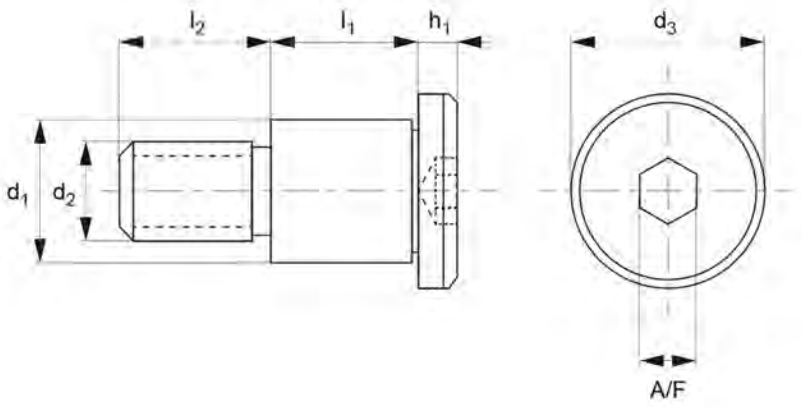



Part Number	d_1+0|-0.025	l_1+0.05|-0.0	d_3	l_2	d_2	h_1	A/F
20232528	4.0	20.0	6.0	4.0	M3	1.3	2.0
20142667	5.0	4.0	9.0	5.0	M4	1.3	2.5
20142674	5.0	5.0	9.0	5.0	M4	1.3	2.5
20142681	5.0	6.0	9.0	5.0	M4	1.3	2.5
20142698	5.0	8.0	9.0	5.0	M4	1.3	2.5
20142704	5.0	10.0	9.0	5.0	M4	1.3	2.5
20142711	5.0	12.0	9.0	5.0	M4	1.3	2.5
20142728	5.0	16.0	9.0	5.0	M4	1.3	2.5
20142735	5.0	20.0	9.0	5.0	M4	1.3	2.5
20145453	5.0	25.0	9.0	5.0	M4	1.3	2.5
20145460	5.0	30.0	9.0	5.0	M4	1.3	2.5
20145477	5.0	40.0	9.0	5.0	M4	1.3	2.5
20224813	5.0	4.0	9.0	5.0	M4	1.3	2.5
20224820	5.0	5.0	9.0	5.0	M4	1.3	2.5
20224837	5.0	6.0	9.0	5.0	M4	1.3	2.5
20224844	5.0	8.0	9.0	5.0	M4	1.3	2.5
20224851	5.0	10.0	9.0	5.0	M4	1.3	2.5
20224868	5.0	12.0	9.0	5.0	M4	1.3	2.5
20224875	5.0	16.0	9.0	5.0	M4	1.3	2.5
20224882	5.0	20.0	9.0	5.0	M4	1.3	2.5
20235338	5.0	25.0	9.0	5.0	M4	1.3	2.5
20235345	5.0	30.0	9.0	5.0	M4	1.3	2.5
20235352	5.0	40.0	9.0	5.0	M4	1.3	2.5

Shoulder Screws - Ultra Low Head

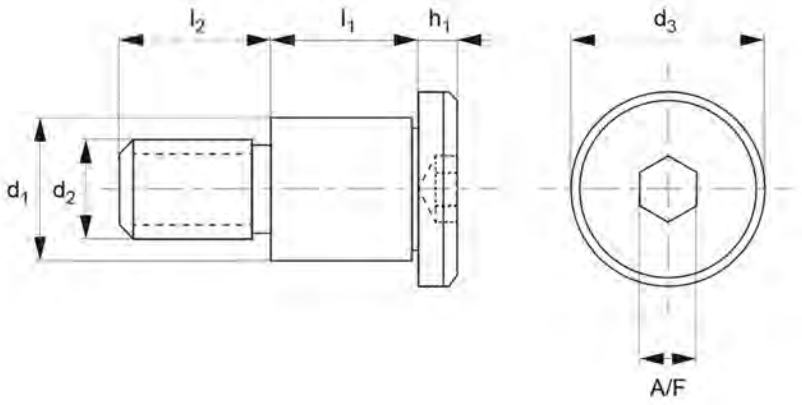



Part Number	d_1+0|-0.025	l_1+0.05|-0.0	d_3	l_2	d_2	h_1	A/F
20232535	5.0	4.0	9.0	5.0	M4	1.3	2.5
20232542	5.0	5.0	9.0	5.0	M4	1.3	2.5
20232559	5.0	6.0	9.0	5.0	M4	1.3	2.5
20232566	5.0	8.0	9.0	5.0	M4	1.3	2.5
20232573	5.0	10.0	9.0	5.0	M4	1.3	2.5
20232580	5.0	12.0	9.0	5.0	M4	1.3	2.5
20232597	5.0	16.0	9.0	5.0	M4	1.3	2.5
20232603	5.0	20.0	9.0	5.0	M4	1.3	2.5
20235406	5.0	25.0	9.0	5.0	M4	1.3	2.5
20235413	5.0	30.0	9.0	5.0	M4	1.3	2.5
20235420	5.0	40.0	9.0	5.0	M4	1.3	2.5
20142742	6.0	4.0	10.0	6.0	M5	1.7	3.0
20142759	6.0	5.0	10.0	6.0	M5	1.7	3.0
20142766	6.0	6.0	10.0	6.0	M5	1.7	3.0
20142773	6.0	8.0	10.0	6.0	M5	1.7	3.0
20142780	6.0	10.0	10.0	6.0	M5	1.7	3.0
20142797	6.0	12.0	10.0	6.0	M5	1.7	3.0
20142803	6.0	16.0	10.0	6.0	M5	1.7	3.0
20142810	6.0	20.0	10.0	6.0	M5	1.7	3.0
20145484	6.0	25.0	10.0	6.0	M5	1.7	3.0
20145491	6.0	30.0	10.0	6.0	M5	1.7	3.0
20145507	6.0	40.0	10.0	6.0	M5	1.7	3.0
20224899	6.0	4.0	10.0	6.0	M5	1.7	3.0

Shoulder Screws - Ultra Low Head

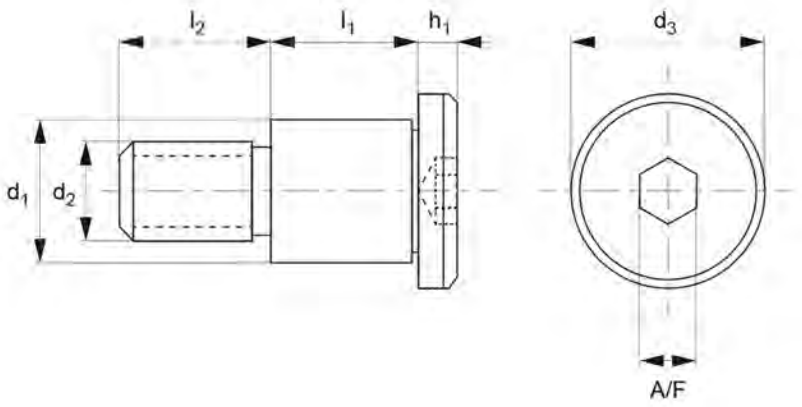



Part Number	d_1+0|-0.025	l_1+0.05|-0.0	d_3	l_2	d_2	h_1	A/F
20224905	6.0	5.0	10.0	6.0	M5	1.7	3.0
20224912	6.0	6.0	10.0	6.0	M5	1.7	3.0
20224929	6.0	8.0	10.0	6.0	M5	1.7	3.0
20224936	6.0	10.0	10.0	6.0	M5	1.7	3.0
20224943	6.0	12.0	10.0	6.0	M5	1.7	3.0
20224950	6.0	16.0	10.0	6.0	M5	1.7	3.0
20224967	6.0	20.0	10.0	6.0	M5	1.7	3.0
20235369	6.0	25.0	10.0	6.0	M5	1.7	3.0
20235376	6.0	30.0	10.0	6.0	M5	1.7	3.0
20235383	6.0	40.0	10.0	6.0	M5	1.7	3.0
20232610	6.0	4.0	10.0	6.0	M5	1.7	3.0
20232627	6.0	5.0	10.0	6.0	M5	1.7	3.0
20232634	6.0	6.0	10.0	6.0	M5	1.7	3.0
20232641	6.0	8.0	10.0	6.0	M5	1.7	3.0
20232658	6.0	10.0	10.0	6.0	M5	1.7	3.0
20232665	6.0	12.0	10.0	6.0	M5	1.7	3.0
20232672	6.0	16.0	10.0	6.0	M5	1.7	3.0
20232689	6.0	20.0	10.0	6.0	M5	1.7	3.0
20235437	6.0	25.0	10.0	6.0	M5	1.7	3.0
20235444	6.0	30.0	10.0	6.0	M5	1.7	3.0
20219895	6.0	40.0	10.0	6.0	M5	1.7	3.0
20142605	8.0	12.0	13.0	11.0	M6	2.0	4.0
20142827	8.0	6.0	13.0	11.0	M6	2.0	4.0

Shoulder Screws - Ultra Low Head

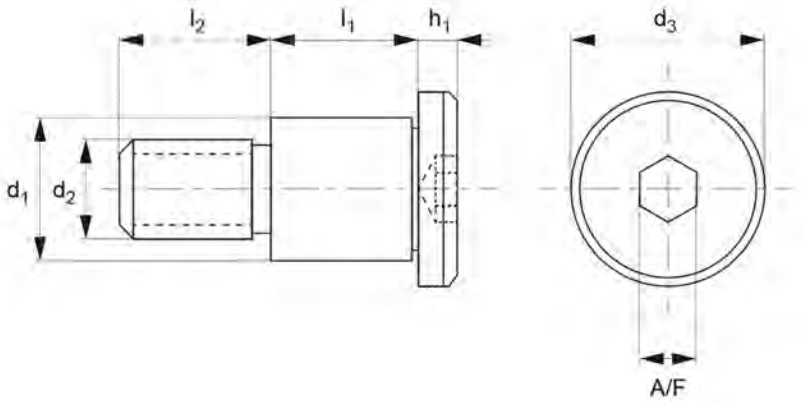



Part Number	d_1+0|-0.025	l_1+0.05|-0.0	d_3	l_2	d_2	h_1	A/F
20142834	8.0	8.0	13.0	11.0	M6	2.0	4.0
20142841	8.0	10.0	13.0	11.0	M6	2.0	4.0
20142858	8.0	16.0	13.0	11.0	M6	2.0	4.0
20142865	8.0	20.0	13.0	11.0	M6	2.0	4.0
20144777	8.0	30.0	13.0	11.0	M6	2.0	4.0
20144784	8.0	40.0	13.0	11.0	M6	2.0	4.0
20145514	8.0	25.0	13.0	11.0	M6	2.0	4.0
20224974	8.0	6.0	13.0	11.0	M6	2.0	4.0
20224981	8.0	8.0	13.0	11.0	M6	2.0	4.0
20224998	8.0	10.0	13.0	11.0	M6	2.0	4.0
20225001	8.0	12.0	13.0	11.0	M6	2.0	4.0
20225018	8.0	16.0	13.0	11.0	M6	2.0	4.0
20225025	8.0	20.0	13.0	11.0	M6	2.0	4.0
20235390	8.0	25.0	13.0	11.0	M6	2.0	4.0
20232269	8.0	30.0	13.0	11.0	M6	2.0	4.0
20232276	8.0	40.0	13.0	11.0	M6	2.0	4.0
20232696	8.0	6.0	13.0	11.0	M6	2.0	4.0
20232702	8.0	8.0	13.0	11.0	M6	2.0	4.0
20232719	8.0	10.0	13.0	11.0	M6	2.0	4.0
20232726	8.0	12.0	13.0	11.0	M6	2.0	4.0
20232733	8.0	16.0	13.0	11.0	M6	2.0	4.0
20232740	8.0	20.0	13.0	11.0	M6	2.0	4.0
20235451	8.0	25.0	13.0	11.0	M6	2.0	4.0

Shoulder Screws - Ultra Low Head

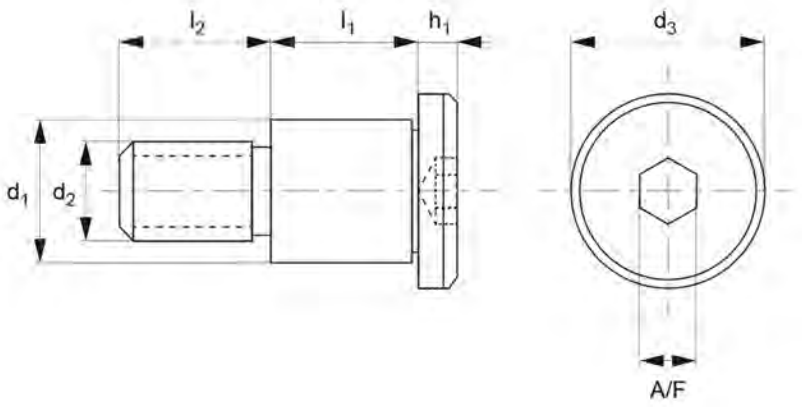



Part Number	d_1+0|-0.025	l_1+0.05|-0.0	d_3	l_2	d_2	h_1	A/F
20232757	8.0	30.0	13.0	11.0	M6	2.0	4.0
20232764	8.0	40.0	13.0	11.0	M6	2.0	4.0
20144791	10.0	8.0	14.0	12.0	M8	2.7	5.0
20144807	10.0	10.0	14.0	12.0	M8	2.7	5.0
20144814	10.0	12.0	14.0	12.0	M8	2.7	5.0
20144821	10.0	16.0	14.0	12.0	M8	2.7	5.0
20144838	10.0	20.0	14.0	12.0	M8	2.7	5.0
20144845	10.0	25.0	14.0	12.0	M8	2.7	5.0
20144852	10.0	30.0	14.0	12.0	M8	2.7	5.0
20144869	10.0	40.0	14.0	12.0	M8	2.7	5.0
20144876	10.0	50.0	14.0	12.0	M8	2.7	5.0
20232283	10.0	8.0	14.0	12.0	M8	2.7	5.0
20232290	10.0	10.0	14.0	12.0	M8	2.7	5.0
20232306	10.0	12.0	14.0	12.0	M8	2.7	5.0
20232313	10.0	16.0	14.0	12.0	M8	2.7	5.0
20232320	10.0	20.0	14.0	12.0	M8	2.7	5.0
20232337	10.0	25.0	14.0	12.0	M8	2.7	5.0
20232344	10.0	30.0	14.0	12.0	M8	2.7	5.0
20232351	10.0	40.0	14.0	12.0	M8	2.7	5.0
20232368	10.0	50.0	14.0	12.0	M8	2.7	5.0
20232771	10.0	8.0	14.0	12.0	M8	2.7	5.0
20232788	10.0	10.0	14.0	12.0	M8	2.7	5.0
20232795	10.0	12.0	14.0	12.0	M8	2.7	5.0

Shoulder Screws - Ultra Low Head

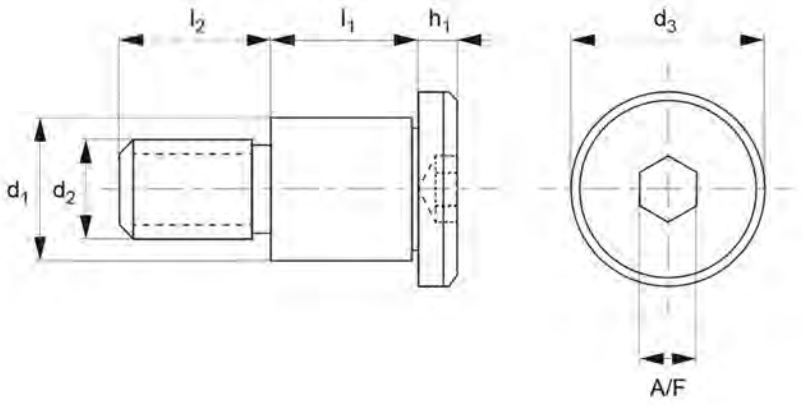



Part Number	d_1+0|-0.025	l_1+0.05|-0.0	d_3	l_2	d_2	h_1	A/F
20232801	10.0	16.0	14.0	12.0	M8	2.7	5.0
20232818	10.0	20.0	14.0	12.0	M8	2.7	5.0
20232825	10.0	25.0	14.0	12.0	M8	2.7	5.0
20232832	10.0	30.0	14.0	12.0	M8	2.7	5.0
20232849	10.0	40.0	14.0	12.0	M8	2.7	5.0
20232856	10.0	50.0	14.0	12.0	M8	2.7	5.0
20144883	12.0	10.0	20.0	16.0	M10	3.5	6.0
20144890	12.0	12.0	20.0	16.0	M10	3.5	6.0
20144906	12.0	16.0	20.0	16.0	M10	3.5	6.0
20144913	12.0	20.0	20.0	16.0	M10	3.5	6.0
20144920	12.0	25.0	20.0	16.0	M10	3.5	6.0
20144937	12.0	30.0	20.0	16.0	M10	3.5	6.0
20144944	12.0	40.0	20.0	16.0	M10	3.5	6.0
20144951	12.0	50.0	20.0	16.0	M10	3.5	6.0
20232375	12.0	10.0	20.0	16.0	M10	3.5	6.0
20232382	12.0	12.0	20.0	16.0	M10	3.5	6.0
20232399	12.0	16.0	20.0	16.0	M10	3.5	6.0
20232405	12.0	20.0	20.0	16.0	M10	3.5	6.0
20232412	12.0	25.0	20.0	16.0	M10	3.5	6.0
20232429	12.0	30.0	20.0	16.0	M10	3.5	6.0
20232436	12.0	40.0	20.0	16.0	M10	3.5	6.0
20232443	12.0	50.0	20.0	16.0	M10	3.5	6.0
20232863	12.0	10.0	20.0	16.0	M10	3.5	6.0

Shoulder Screws - Ultra Low Head

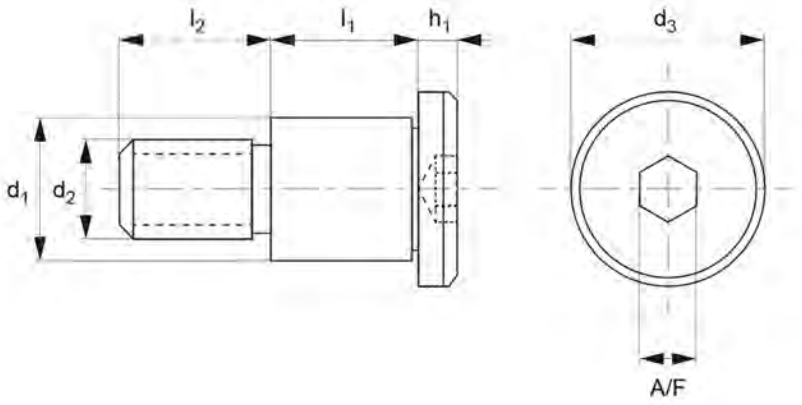



Part Number	d_1+0|-0.025	l_1+0.05|-0.0	d_3	l_2	d_2	h_1	A/F
20232870	12.0	12.0	20.0	16.0	M10	3.5	6.0
20232887	12.0	16.0	20.0	16.0	M10	3.5	6.0
20232894	12.0	20.0	20.0	16.0	M10	3.5	6.0
20232900	12.0	25.0	20.0	16.0	M10	3.5	6.0
20232917	12.0	30.0	20.0	16.0	M10	3.5	6.0
20232924	12.0	40.0	20.0	16.0	M10	3.5	6.0
20232931	12.0	50.0	20.0	16.0	M10	3.5	6.0

Shoulder Screws - Cap Head

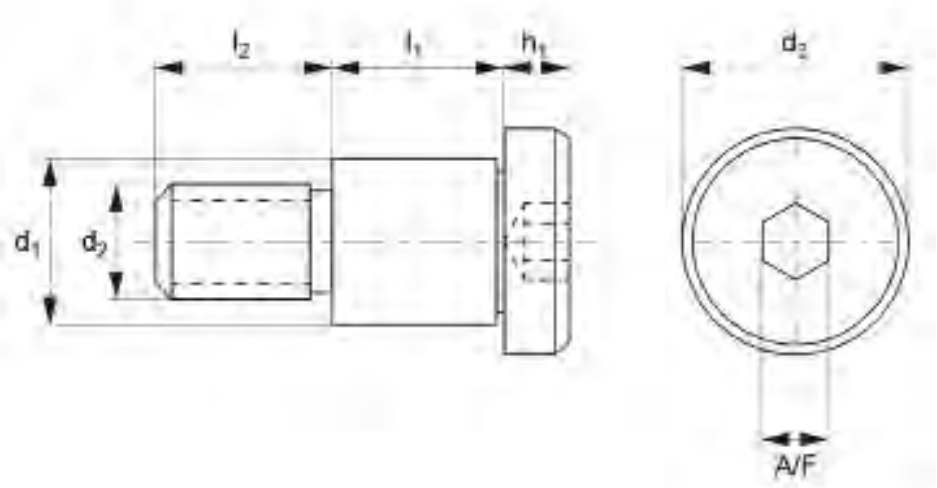



Features

- They are made from austenitic Stainless Steel or Titanium that provides good resistance to corrosion and machinability.
- The material is a popular choice for construction and automotive applications.

Specifications

Material: 303 Stainless Steel, 316 Stainless Steel, 416 Stainless Steel, Titanium G2, Titanium G5

Colour: , Black

This range of Shoulder Screws feature a cap head with a choice of hexagonal , torx or slotted drive.

- Hexagonal drives are ideal for precision assembly and are ideally used where less surface area is available.
- Torx drives provide a positive-engaging, fast-locating technique for transmitting drive torque with less necessary downward pressure.
- Slotted drives accept standard blade screwdrivers and require less downward pressure to drive parts, than those with recessed openings.

They are made from austenitic Stainless Steel or Titanium that provides good resistance to corrosion and machinability. The material is a popular choice for construction and automotive applications.

Shoulder Screws - Cap Head

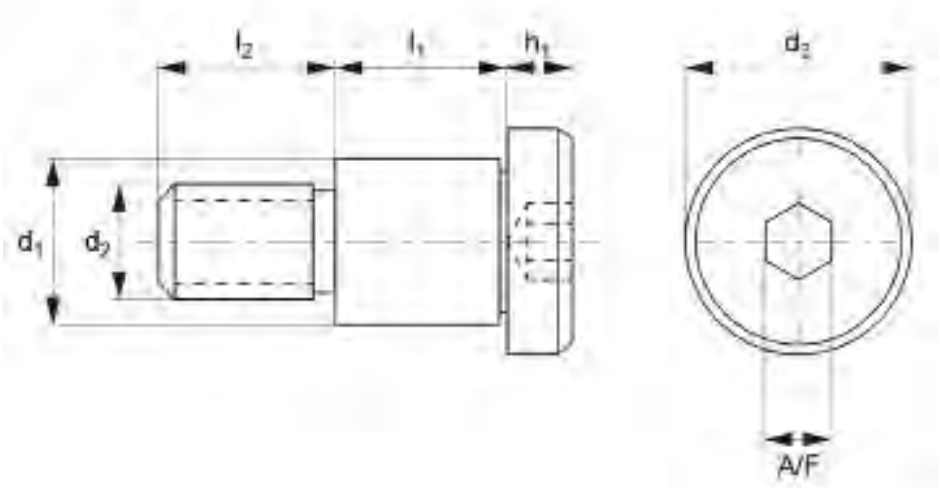



Part Number	Drive Type	d_1+0|-0.025	l_1+0.05|-0.0	d_2	d_3	l_2	Material
20143190	Hex Drive	3.0	4.0	M2	5.0	4.0	303 Stainless Steel
20143251	Hex Drive	3.0	5.0	M2	5.0	4.0	303 Stainless Steel
20143268	Hex Drive	3.0	6.0	M2	5.0	4.0	303 Stainless Steel
20143275	Hex Drive	3.0	8.0	M2	5.0	4.0	303 Stainless Steel
20143282	Hex Drive	3.0	10.0	M2	5.0	4.0	303 Stainless Steel
20143800	Hex Drive	3.0	16.0	M2	5.0	4.0	303 Stainless Steel
20143824	Hex Drive	3.0	2.0	M2	5.0	4.0	303 Stainless Steel
20143831	Hex Drive	3.0	3.0	M2	5.0	4.0	303 Stainless Steel
20143848	Hex Drive	3.0	7.0	M2	5.0	4.0	303 Stainless Steel
20143855	Hex Drive	3.0	12.0	M2	5.0	4.0	303 Stainless Steel
20143862	Hex Drive	3.0	14.0	M2	5.0	4.0	303 Stainless Steel
20143879	Hex Drive	3.0	18.0	M2	5.0	4.0	303 Stainless Steel
20143886	Hex Drive	3.0	20.0	M2	5.0	4.0	303 Stainless Steel
20143893	Hex Drive	3.0	25.0	M2	5.0	4.0	303 Stainless Steel
20242879	Hex Drive	3.0	2.0	M2	5.0	4.0	Titanium G5
20242886	Hex Drive	3.0	3.0	M2	5.0	4.0	Titanium G5
20242893	Hex Drive	3.0	4.0	M2	5.0	4.0	Titanium G5
20242909	Hex Drive	3.0	5.0	M2	5.0	4.0	Titanium G5
20242916	Hex Drive	3.0	6.0	M2	5.0	4.0	Titanium G5
20242923	Hex Drive	3.0	7.0	M2	5.0	4.0	Titanium G5
20242930	Hex Drive	3.0	8.0	M2	5.0	4.0	Titanium G5

Shoulder Screws - Cap Head

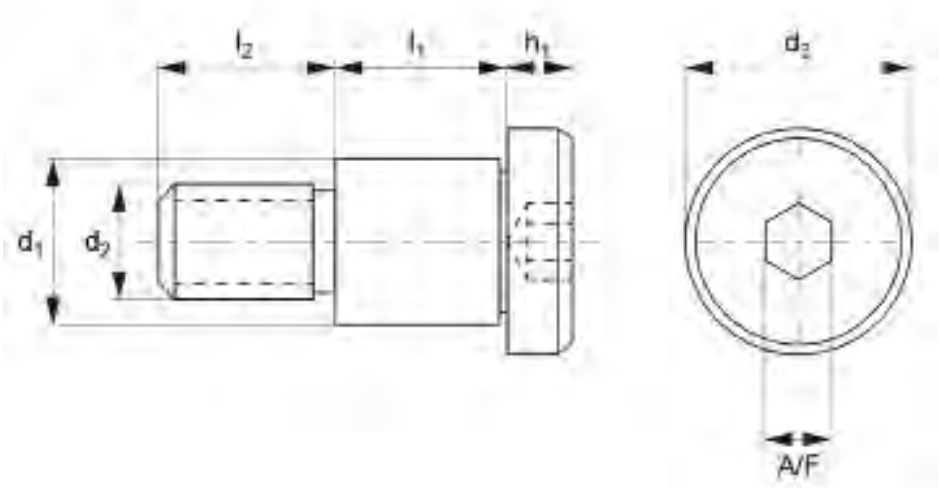



Part Number	Drive Type	d_1+0|-0.025	l_1+0.05|-0.0	d_2	d_3	l_2	Material
20242947	Hex Drive	3.0	10.0	M2	5.0	4.0	Titanium G5
20242954	Hex Drive	3.0	12.0	M2	5.0	4.0	Titanium G5
20242961	Hex Drive	3.0	14.0	M2	5.0	4.0	Titanium G5
20242978	Hex Drive	3.0	16.0	M2	5.0	4.0	Titanium G5
20242985	Hex Drive	3.0	18.0	M2	5.0	4.0	Titanium G5
20242992	Hex Drive	3.0	20.0	M2	5.0	4.0	Titanium G5
20243005	Hex Drive	3.0	25.0	M2	5.0	4.0	Titanium G5
20241377	Hex Drive	3.0	2.0	M2	5.0	4.0	Titanium G2
20241384	Hex Drive	3.0	3.0	M2	5.0	4.0	Titanium G2
20241391	Hex Drive	3.0	4.0	M2	5.0	4.0	Titanium G2
20241407	Hex Drive	3.0	5.0	M2	5.0	4.0	Titanium G2
20241414	Hex Drive	3.0	6.0	M2	5.0	4.0	Titanium G2
20241421	Hex Drive	3.0	7.0	M2	5.0	4.0	Titanium G2
20241438	Hex Drive	3.0	8.0	M2	5.0	4.0	Titanium G2
20241445	Hex Drive	3.0	10.0	M2	5.0	4.0	Titanium G2
20241452	Hex Drive	3.0	12.0	M2	5.0	4.0	Titanium G2
20241469	Hex Drive	3.0	14.0	M2	5.0	4.0	Titanium G2
20241476	Hex Drive	3.0	16.0	M2	5.0	4.0	Titanium G2
20241483	Hex Drive	3.0	18.0	M2	5.0	4.0	Titanium G2
20241490	Hex Drive	3.0	20.0	M2	5.0	4.0	Titanium G2
20241506	Hex Drive	3.0	25.0	M2	5.0	4.0	Titanium G2

Shoulder Screws - Cap Head

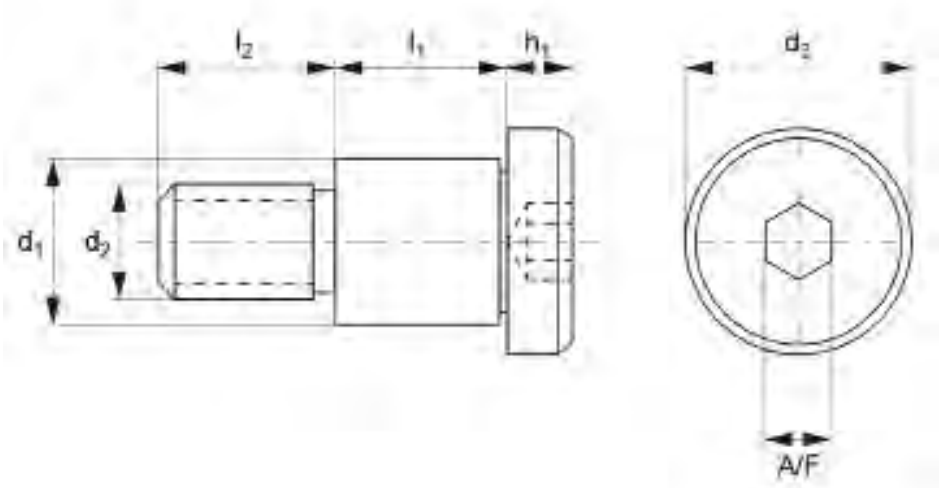



Part Number	Drive Type	d_1+0|-0.025	l_1+0.05|-0.0	d_2	d_3	l_2	Material
20232948	Hex Drive	3.0	3.0	M2	5.0	4.0	316 Stainless Steel
20232955	Hex Drive	3.0	4.0	M2	5.0	4.0	316 Stainless Steel
20232962	Hex Drive	3.0	5.0	M2	5.0	4.0	316 Stainless Steel
20232979	Hex Drive	3.0	6.0	M2	5.0	4.0	316 Stainless Steel
20245290	Hex Drive	3.0	7.0	M2	5.0	4.0	316 Stainless Steel
20232986	Hex Drive	3.0	8.0	M2	5.0	4.0	316 Stainless Steel
20232993	Hex Drive	3.0	10.0	M2	5.0	4.0	316 Stainless Steel
20230173	Hex Drive	3.0	2.0	M2	5.0	4.0	303 Stainless Steel
20230180	Hex Drive	3.0	3.0	M2	5.0	4.0	303 Stainless Steel
20230197	Hex Drive	3.0	4.0	M2	5.0	4.0	303 Stainless Steel
20230203	Hex Drive	3.0	5.0	M2	5.0	4.0	303 Stainless Steel
20230210	Hex Drive	3.0	6.0	M2	5.0	4.0	303 Stainless Steel
20230227	Hex Drive	3.0	7.0	M2	5.0	4.0	303 Stainless Steel
20230234	Hex Drive	3.0	8.0	M2	5.0	4.0	303 Stainless Steel
20230241	Hex Drive	3.0	10.0	M2	5.0	4.0	303 Stainless Steel
20230258	Hex Drive	3.0	12.0	M2	5.0	4.0	303 Stainless Steel
20230265	Hex Drive	3.0	14.0	M2	5.0	4.0	303 Stainless Steel
20230272	Hex Drive	3.0	16.0	M2	5.0	4.0	303 Stainless Steel
20230289	Hex Drive	3.0	18.0	M2	5.0	4.0	303 Stainless Steel
20230296	Hex Drive	3.0	20.0	M2	5.0	4.0	303 Stainless Steel
20230302	Hex Drive	3.0	25.0	M2	5.0	4.0	303 Stainless Steel

Shoulder Screws - Cap Head

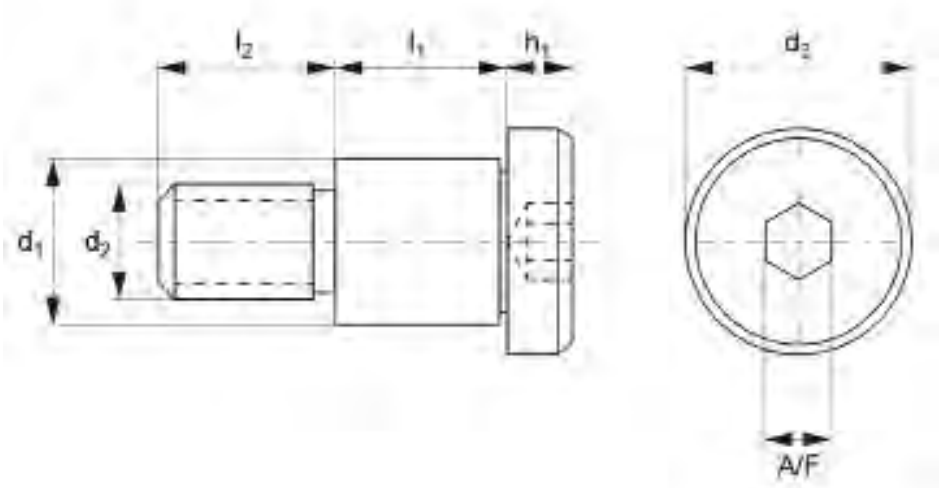



Part Number	Drive Type	d_1+0|-0.025	l_1+0.05|-0.0	d_2	d_3	l_2	Material
20228552	Hex Drive	3.0	3.0	M2	5.0	4.0	316 Stainless Steel
20222574	Hex Drive	3.0	4.0	M2	5.0	4.0	316 Stainless Steel
20222581	Hex Drive	3.0	5.0	M2	5.0	4.0	316 Stainless Steel
20222598	Hex Drive	3.0	6.0	M2	5.0	4.0	316 Stainless Steel
20244941	Hex Drive	3.0	7.0	M2	5.0	4.0	316 Stainless Steel
20235321	Hex Drive	3.0	8.0	M2	5.0	4.0	316 Stainless Steel
20222604	Hex Drive	3.0	10.0	M2	5.0	4.0	316 Stainless Steel
20142032	Hex Drive	4.0	4.0	M3	6.0	4.0	303 Stainless Steel
20142148	Hex Drive	6.0	5.0	M3	6.0	4.0	303 Stainless Steel
20142254	Hex Drive	4.0	6.0	M3	6.0	4.0	303 Stainless Steel
20142360	Hex Drive	4.0	8.0	M3	6.0	4.0	303 Stainless Steel
20142438	Hex Drive	4.0	10.0	M3	6.0	4.0	303 Stainless Steel
20142971	Hex Drive	4.0	12.0	M3	6.0	4.0	303 Stainless Steel
20143817	Hex Drive	4.0	25.0	M3	6.0	4.0	303 Stainless Steel
20143909	Hex Drive	4.0	2.0	M3	6.0	4.0	303 Stainless Steel
20143916	Hex Drive	4.0	3.0	M3	6.0	4.0	303 Stainless Steel
20143923	Hex Drive	4.0	7.0	M3	6.0	4.0	303 Stainless Steel
20143930	Hex Drive	4.0	14.0	M3	6.0	4.0	303 Stainless Steel
20143947	Hex Drive	4.0	16.0	M3	6.0	4.0	303 Stainless Steel
20143954	Hex Drive	4.0	18.0	M3	6.0	4.0	303 Stainless Steel
20143961	Hex Drive	4.0	20.0	M3	6.0	4.0	303 Stainless Steel

Shoulder Screws - Cap Head

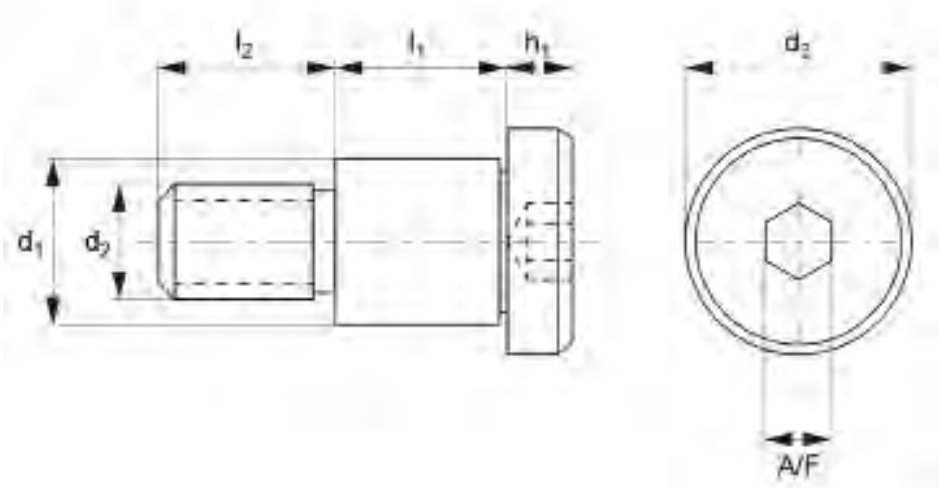



Part Number	Drive Type	d_1+0|-0.025	l_1+0.05|-0.0	d_2	d_3	l_2	Material
20143978	Hex Drive	4.0	30.0	M3	6.0	4.0	303 Stainless Steel
20143985	Hex Drive	4.0	35.0	M3	6.0	4.0	303 Stainless Steel
20143992	Hex Drive	4.0	40.0	M3	6.0	4.0	303 Stainless Steel
20144005	Hex Drive	4.0	45.0	M3	6.0	4.0	303 Stainless Steel
20144012	Hex Drive	4.0	50.0	M3	6.0	4.0	303 Stainless Steel
20243012	Hex Drive	4.0	2.0	M3	6.0	4.0	Titanium G5
20243029	Hex Drive	4.0	3.0	M3	6.0	4.0	Titanium G5
20243036	Hex Drive	4.0	4.0	M3	6.0	4.0	Titanium G5
20243043	Hex Drive	4.0	5.0	M3	6.0	4.0	Titanium G5
20243050	Hex Drive	4.0	6.0	M3	6.0	4.0	Titanium G5
20243067	Hex Drive	4.0	7.0	M3	6.0	4.0	Titanium G5
20243074	Hex Drive	4.0	8.0	M3	6.0	4.0	Titanium G5
20243081	Hex Drive	4.0	10.0	M3	6.0	4.0	Titanium G5
20243098	Hex Drive	4.0	12.0	M3	6.0	4.0	Titanium G5
20243104	Hex Drive	4.0	14.0	M3	6.0	4.0	Titanium G5
20243111	Hex Drive	4.0	16.0	M3	6.0	4.0	Titanium G5
20243128	Hex Drive	4.0	18.0	M3	6.0	4.0	Titanium G5
20243135	Hex Drive	4.0	20.0	M3	6.0	4.0	Titanium G5
20243142	Hex Drive	4.0	25.0	M3	6.0	4.0	Titanium G5
20243159	Hex Drive	4.0	30.0	M3	6.0	4.0	Titanium G5
20243166	Hex Drive	4.0	35.0	M3	6.0	4.0	Titanium G5

Shoulder Screws - Cap Head

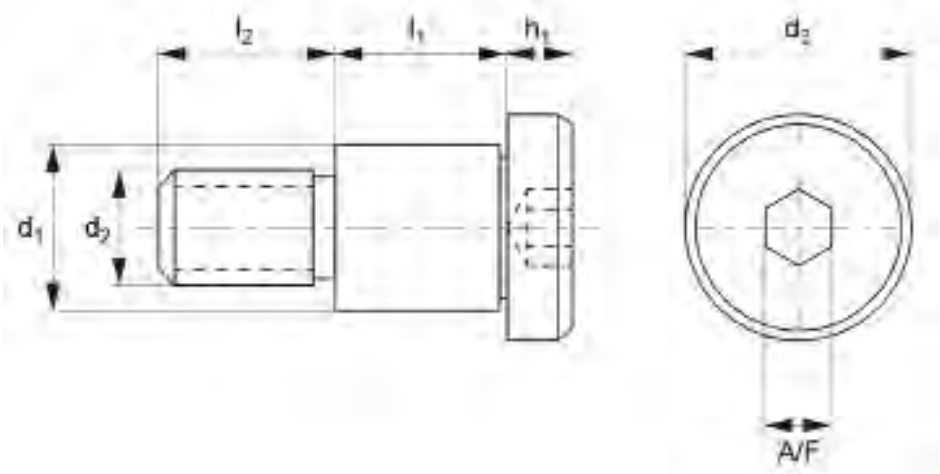



Part Number	Drive Type	d_1+0|-0.025	l_1+0.05|-0.0	d_2	d_3	l_2	Material
20243173	Hex Drive	4.0	40.0	M3	6.0	4.0	Titanium G5
20243180	Hex Drive	4.0	45.0	M3	6.0	4.0	Titanium G5
20243197	Hex Drive	4.0	50.0	M3	6.0	4.0	Titanium G5
20241513	Hex Drive	4.0	2.0	M3	6.0	4.0	Titanium G2
20241520	Hex Drive	4.0	3.0	M3	6.0	4.0	Titanium G2
20241537	Hex Drive	4.0	4.0	M3	6.0	4.0	Titanium G2
20241544	Hex Drive	4.0	5.0	M3	6.0	4.0	Titanium G2
20241551	Hex Drive	4.0	6.0	M3	6.0	4.0	Titanium G2
20241568	Hex Drive	4.0	7.0	M3	6.0	4.0	Titanium G2
20241575	Hex Drive	4.0	8.0	M3	6.0	4.0	Titanium G2
20241582	Hex Drive	4.0	10.0	M3	6.0	4.0	Titanium G2
20241599	Hex Drive	4.0	12.0	M3	6.0	4.0	Titanium G2
20241605	Hex Drive	4.0	14.0	M3	6.0	4.0	Titanium G2
20241612	Hex Drive	4.0	16.0	M3	6.0	4.0	Titanium G2
20241629	Hex Drive	4.0	18.0	M3	6.0	4.0	Titanium G2
20241636	Hex Drive	4.0	20.0	M3	6.0	4.0	Titanium G2
20241643	Hex Drive	4.0	25.0	M3	6.0	4.0	Titanium G2
20241650	Hex Drive	4.0	30.0	M3	6.0	4.0	Titanium G2
20241667	Hex Drive	4.0	35.0	M3	6.0	4.0	Titanium G2
20241674	Hex Drive	4.0	40.0	M3	6.0	4.0	Titanium G2
20241681	Hex Drive	4.0	45.0	M3	6.0	4.0	Titanium G2

Shoulder Screws - Cap Head

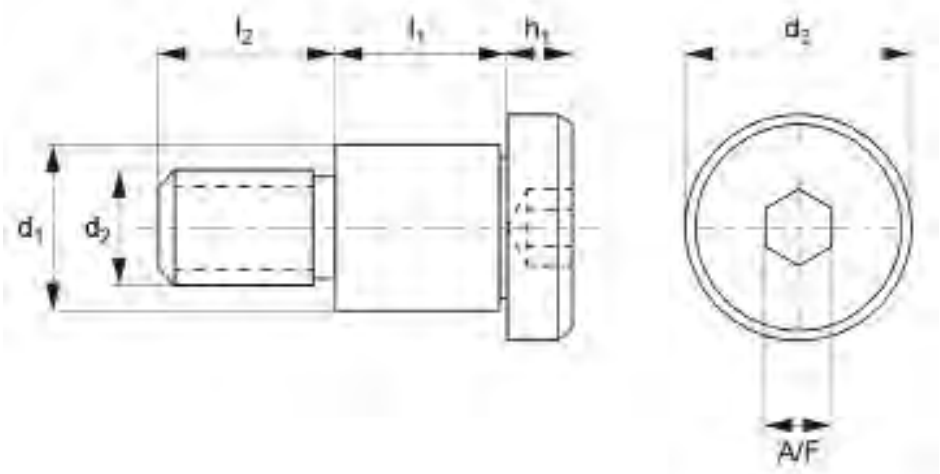



Part Number	Drive Type	d_1+0|-0.025	l_1+0.05|-0.0	d_2	d_3	l_2	Material
20241698	Hex Drive	4.0	50.0	M3	6.0	4.0	Titanium G2
20233006	Hex Drive	4.0	4.0	M3	6.0	4.0	316 Stainless Steel
20233013	Hex Drive	4.0	5.0	M3	6.0	4.0	316 Stainless Steel
20233020	Hex Drive	4.0	6.0	M3	6.0	4.0	316 Stainless Steel
20245306	Hex Drive	4.0	7.0	M3	6.0	4.0	316 Stainless Steel
20233037	Hex Drive	4.0	8.0	M3	6.0	4.0	316 Stainless Steel
20233044	Hex Drive	4.0	10.0	M3	6.0	4.0	316 Stainless Steel
20233051	Hex Drive	4.0	12.0	M3	6.0	4.0	316 Stainless Steel
20245313	Hex Drive	4.0	14.0	M3	6.0	4.0	316 Stainless Steel
20233068	Hex Drive	4.0	16.0	M3	6.0	4.0	316 Stainless Steel
20245320	Hex Drive	4.0	18.0	M3	6.0	4.0	316 Stainless Steel
20233075	Hex Drive	4.0	20.0	M3	6.0	4.0	316 Stainless Steel
20248710	Torx Drive	4.0	2.0	M3	6.0	4.0	316 Stainless Steel
20248727	Torx Drive	4.0	3.0	M3	6.0	4.0	316 Stainless Steel
20234751	Torx Drive	4.0	4.0	M3	6.0	4.0	316 Stainless Steel
20234768	Torx Drive	4.0	5.0	M3	6.0	4.0	316 Stainless Steel
20234775	Torx Drive	4.0	6.0	M3	6.0	4.0	316 Stainless Steel
20248734	Torx Drive	4.0	7.0	M3	6.0	4.0	316 Stainless Steel
20234782	Torx Drive	4.0	8.0	M3	6.0	4.0	316 Stainless Steel
20234799	Torx Drive	4.0	10.0	M3	6.0	4.0	316 Stainless Steel
20248741	Torx Drive	4.0	12.0	M3	6.0	4.0	316 Stainless Steel

Shoulder Screws - Cap Head

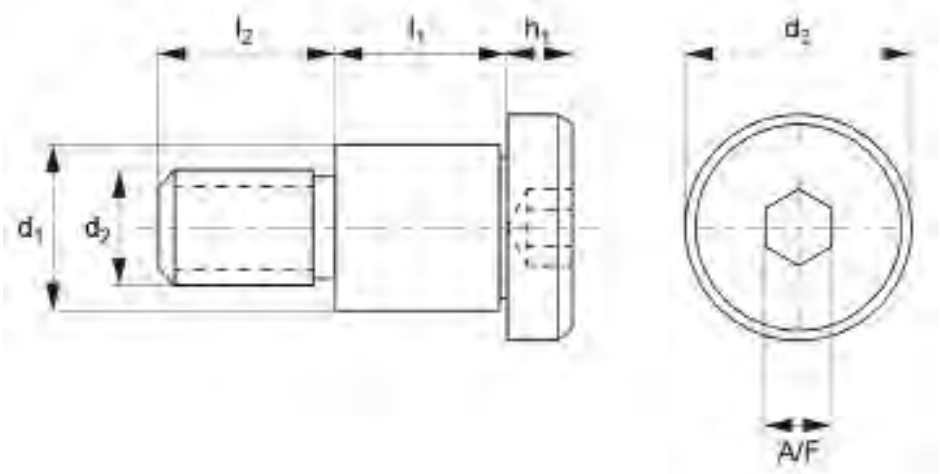



Part Number	Drive Type	d_1+0|-0.025	l_1+0.05|-0.0	d_2	d_3	l_2	Material
20248758	Torx Drive	4.0	14.0	M3	6.0	4.0	316 Stainless Steel
20248765	Torx Drive	4.0	16.0	M3	6.0	4.0	316 Stainless Steel
20248772	Torx Drive	4.0	18.0	M3	6.0	4.0	316 Stainless Steel
20248789	Torx Drive	4.0	20.0	M3	6.0	4.0	316 Stainless Steel
20248796	Torx Drive	4.0	25.0	M3	6.0	4.0	316 Stainless Steel
20248802	Torx Drive	4.0	30.0	M3	6.0	4.0	316 Stainless Steel
20248819	Torx Drive	4.0	35.0	M3	6.0	4.0	316 Stainless Steel
20248826	Torx Drive	4.0	40.0	M3	6.0	4.0	316 Stainless Steel
20248833	Torx Drive	4.0	45.0	M3	6.0	4.0	316 Stainless Steel
20248840	Torx Drive	4.0	50.0	M3	6.0	4.0	316 Stainless Steel
20230319	Hex Drive	4.0	2.0	M3	6.0	4.0	303 Stainless Steel
20230326	Hex Drive	4.0	3.0	M3	6.0	4.0	303 Stainless Steel
20230333	Hex Drive	4.0	4.0	M3	6.0	4.0	303 Stainless Steel
20230340	Hex Drive	4.0	5.0	M3	6.0	4.0	303 Stainless Steel
20230357	Hex Drive	4.0	6.0	M3	6.0	4.0	303 Stainless Steel
20230364	Hex Drive	4.0	7.0	M3	6.0	4.0	303 Stainless Steel
20230371	Hex Drive	4.0	8.0	M3	6.0	4.0	303 Stainless Steel
20230388	Hex Drive	4.0	10.0	M3	6.0	4.0	303 Stainless Steel
20230395	Hex Drive	4.0	12.0	M3	6.0	4.0	303 Stainless Steel
20230401	Hex Drive	4.0	14.0	M3	6.0	4.0	303 Stainless Steel
20230418	Hex Drive	4.0	16.0	M3	6.0	4.0	303 Stainless Steel

Shoulder Screws - Cap Head

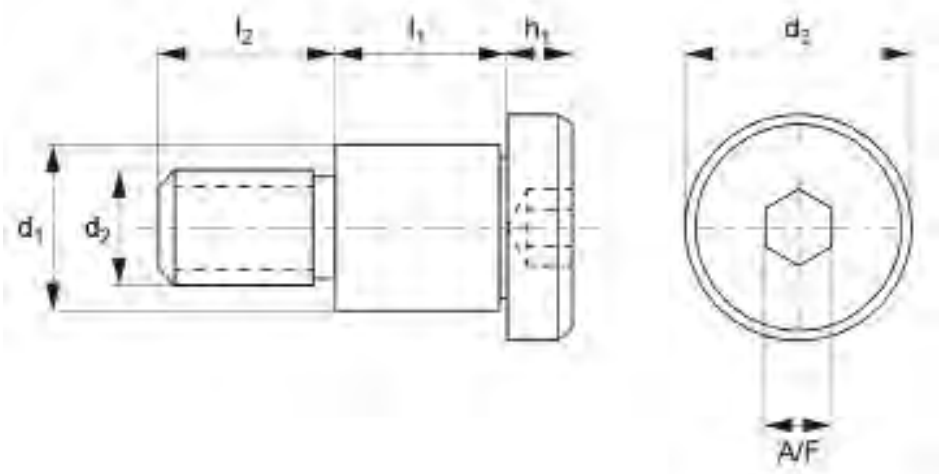



Part Number	Drive Type	d_1+0|-0.025	l_1+0.05|-0.0	d_2	d_3	l_2	Material
20230425	Hex Drive	4.0	18.0	M3	6.0	4.0	303 Stainless Steel
20230432	Hex Drive	4.0	20.0	M3	6.0	4.0	303 Stainless Steel
20230449	Hex Drive	4.0	25.0	M3	6.0	4.0	303 Stainless Steel
20230456	Hex Drive	4.0	30.0	M3	6.0	4.0	303 Stainless Steel
20230463	Hex Drive	4.0	35.0	M3	6.0	4.0	303 Stainless Steel
20230470	Hex Drive	4.0	40.0	M3	6.0	4.0	303 Stainless Steel
20230487	Hex Drive	4.0	45.0	M3	6.0	4.0	303 Stainless Steel
20230494	Hex Drive	4.0	50.0	M3	6.0	4.0	303 Stainless Steel
20231781	Slotted Drive	4.0	4.0	M3	6.0	4.0	303 Stainless Steel
20231798	Slotted Drive	4.0	5.0	M3	6.0	4.0	303 Stainless Steel
20231804	Slotted Drive	4.0	6.0	M3	6.0	4.0	303 Stainless Steel
20231811	Slotted Drive	4.0	8.0	M3	6.0	4.0	303 Stainless Steel
20231828	Slotted Drive	4.0	10.0	M3	6.0	4.0	303 Stainless Steel
20231835	Slotted Drive	4.0	12.0	M3	6.0	4.0	303 Stainless Steel
20231842	Slotted Drive	4.0	16.0	M3	6.0	4.0	303 Stainless Steel
20231859	Slotted Drive	4.0	20.0	M3	6.0	4.0	303 Stainless Steel
20247690	Torx Drive	4.0	2.0	M3	6.0	4.0	303 Stainless Steel
20247706	Torx Drive	4.0	3.0	M3	6.0	4.0	303 Stainless Steel
20234218	Torx Drive	4.0	4.0	M3	6.0	4.0	303 Stainless Steel
20234225	Torx Drive	4.0	5.0	M3	6.0	4.0	303 Stainless Steel
20234232	Torx Drive	4.0	6.0	M3	6.0	4.0	303 Stainless Steel

Shoulder Screws - Cap Head

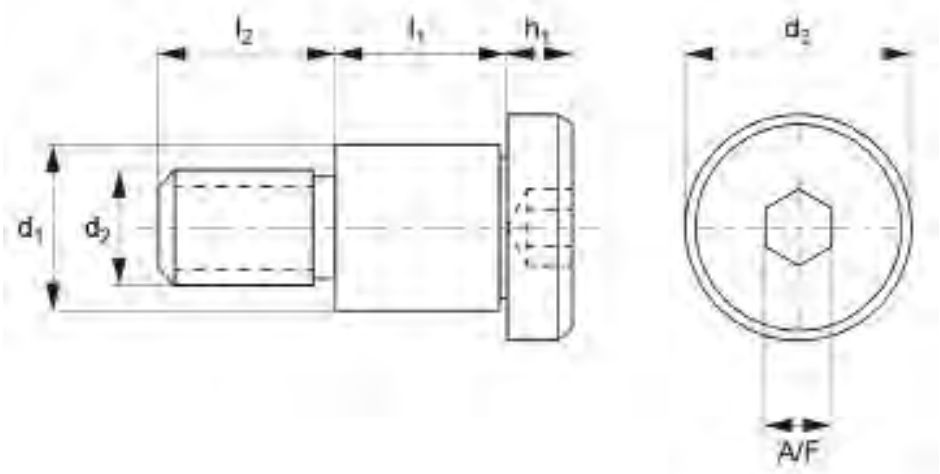



Part Number	Drive Type	d_1+0|-0.025	l_1+0.05|-0.0	d_2	d_3	l_2	Material
20247713	Torx Drive	4.0	7.0	M3	6.0	4.0	303 Stainless Steel
20234249	Torx Drive	4.0	8.0	M3	6.0	4.0	303 Stainless Steel
20234256	Torx Drive	4.0	10.0	M3	6.0	4.0	303 Stainless Steel
20247720	Torx Drive	4.0	12.0	M3	6.0	4.0	303 Stainless Steel
20247737	Torx Drive	4.0	14.0	M3	6.0	4.0	303 Stainless Steel
20247744	Torx Drive	4.0	16.0	M3	6.0	4.0	303 Stainless Steel
20247751	Torx Drive	4.0	18.0	M3	6.0	4.0	303 Stainless Steel
20247768	Torx Drive	4.0	20.0	M3	6.0	4.0	303 Stainless Steel
20247775	Torx Drive	4.0	25.0	M3	6.0	4.0	303 Stainless Steel
20247782	Torx Drive	4.0	30.0	M3	6.0	4.0	303 Stainless Steel
20247799	Torx Drive	4.0	35.0	M3	6.0	4.0	303 Stainless Steel
20247805	Torx Drive	4.0	40.0	M3	6.0	4.0	303 Stainless Steel
20247812	Torx Drive	4.0	45.0	M3	6.0	4.0	303 Stainless Steel
20247829	Torx Drive	4.0	50.0	M3	6.0	4.0	303 Stainless Steel
20222000	Hex Drive	4.0	4.0	M3	6.0	4.0	416 Stainless Steel
20222116	Hex Drive	4.0	5.0	M3	6.0	4.0	416 Stainless Steel
20222222	Hex Drive	4.0	6.0	M3	6.0	4.0	416 Stainless Steel
20222338	Hex Drive	4.0	8.0	M3	6.0	4.0	416 Stainless Steel
20222406	Hex Drive	4.0	10.0	M3	6.0	4.0	416 Stainless Steel
20222611	Hex Drive	4.0	4.0	M3	6.0	4.0	316 Stainless Steel
20222628	Hex Drive	4.0	5.0	M3	6.0	4.0	316 Stainless Steel

Shoulder Screws - Cap Head

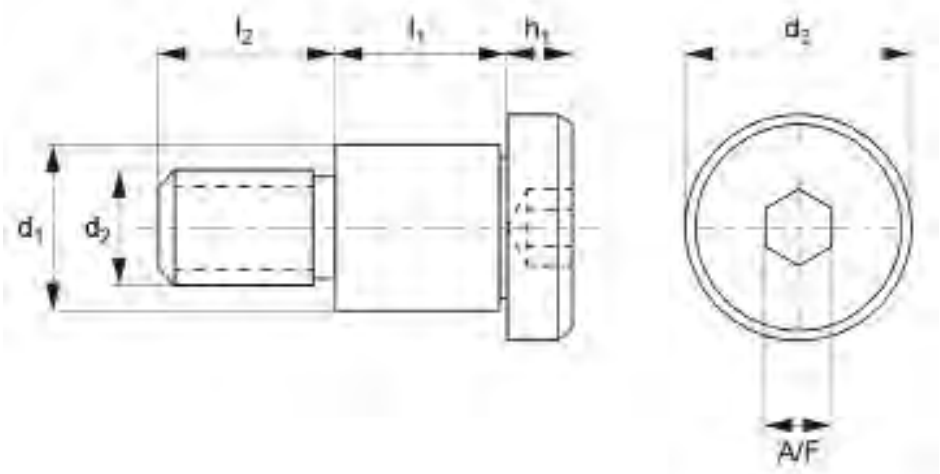



Part Number	Drive Type	d_1+0|-0.025	l_1+0.05|-0.0	d_2	d_3	l_2	Material
20222635	Hex Drive	4.0	6.0	M3	6.0	4.0	316 Stainless Steel
20244958	Hex Drive	4.0	7.0	M3	6.0	4.0	316 Stainless Steel
20222642	Hex Drive	4.0	8.0	M3	6.0	4.0	316 Stainless Steel
20222659	Hex Drive	4.0	10.0	M3	6.0	4.0	316 Stainless Steel
20228415	Hex Drive	4.0	12.0	M3	6.0	4.0	316 Stainless Steel
20244965	Hex Drive	4.0	14.0	M3	6.0	4.0	316 Stainless Steel
20228590	Hex Drive	4.0	16.0	M3	6.0	4.0	316 Stainless Steel
20244972	Hex Drive	4.0	18.0	M3	6.0	4.0	316 Stainless Steel
20228606	Hex Drive	4.0	20.0	M3	6.0	4.0	316 Stainless Steel
20246679	Torx Drive	4.0	2.0	M3	6.0	4.0	316 Stainless Steel
20246686	Torx Drive	4.0	3.0	M3	6.0	4.0	316 Stainless Steel
20233686	Torx Drive	4.0	4.0	M3	6.0	4.0	316 Stainless Steel
20233693	Torx Drive	4.0	5.0	M3	6.0	4.0	316 Stainless Steel
20233709	Torx Drive	4.0	6.0	M3	6.0	4.0	316 Stainless Steel
20246693	Torx Drive	4.0	7.0	M3	6.0	4.0	316 Stainless Steel
20233716	Torx Drive	4.0	8.0	M3	6.0	4.0	316 Stainless Steel
20233723	Torx Drive	4.0	10.0	M3	6.0	4.0	316 Stainless Steel
20246709	Torx Drive	4.0	12.0	M3	6.0	4.0	316 Stainless Steel
20246716	Torx Drive	4.0	14.0	M3	6.0	4.0	316 Stainless Steel
20246723	Torx Drive	4.0	16.0	M3	6.0	4.0	316 Stainless Steel
20246730	Torx Drive	4.0	18.0	M3	6.0	4.0	316 Stainless Steel

Shoulder Screws - Cap Head

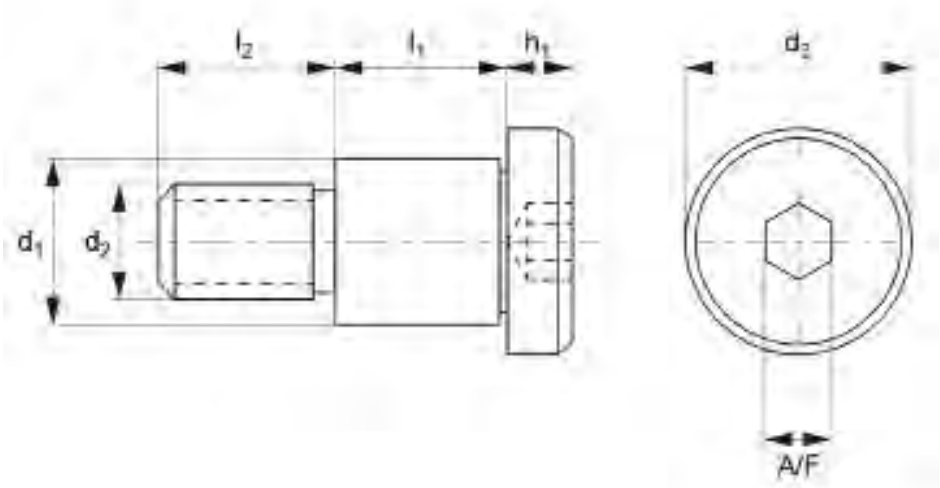



Part Number	Drive Type	d_1+0|-0.025	l_1+0.05|-0.0	d_2	d_3	l_2	Material
20246747	Torx Drive	4.0	20.0	M3	6.0	4.0	316 Stainless Steel
20246754	Torx Drive	4.0	25.0	M3	6.0	4.0	316 Stainless Steel
20246761	Torx Drive	4.0	30.0	M3	6.0	4.0	316 Stainless Steel
20246778	Torx Drive	4.0	35.0	M3	6.0	4.0	316 Stainless Steel
20246785	Torx Drive	4.0	40.0	M3	6.0	4.0	316 Stainless Steel
20246792	Torx Drive	4.0	45.0	M3	6.0	4.0	316 Stainless Steel
20246808	Torx Drive	4.0	50.0	M3	6.0	4.0	316 Stainless Steel
20221195	Slotted Drive	4.0	4.0	M3	6.0	4.0	303 Stainless Steel
20221409	Slotted Drive	4.0	5.0	M3	6.0	4.0	303 Stainless Steel
20221614	Slotted Drive	4.0	6.0	M3	6.0	4.0	303 Stainless Steel
20221799	Slotted Drive	4.0	8.0	M3	6.0	4.0	303 Stainless Steel
20221911	Slotted Drive	4.0	10.0	M3	6.0	4.0	303 Stainless Steel
20228316	Slotted Drive	4.0	12.0	M3	6.0	4.0	303 Stainless Steel
20228323	Slotted Drive	4.0	16.0	M3	6.0	4.0	303 Stainless Steel
20228330	Slotted Drive	4.0	20.0	M3	6.0	4.0	303 Stainless Steel
20245658	Torx Drive	4.0	2.0	M3	6.0	4.0	303 Stainless Steel
20245665	Torx Drive	4.0	3.0	M3	6.0	4.0	303 Stainless Steel
20225032	Torx Drive	4.0	4.0	M3	6.0	4.0	303 Stainless Steel
20225049	Torx Drive	4.0	5.0	M3	6.0	4.0	303 Stainless Steel
20225056	Torx Drive	4.0	6.0	M3	6.0	4.0	303 Stainless Steel
20245672	Torx Drive	4.0	7.0	M3	6.0	4.0	303 Stainless Steel

Shoulder Screws - Cap Head

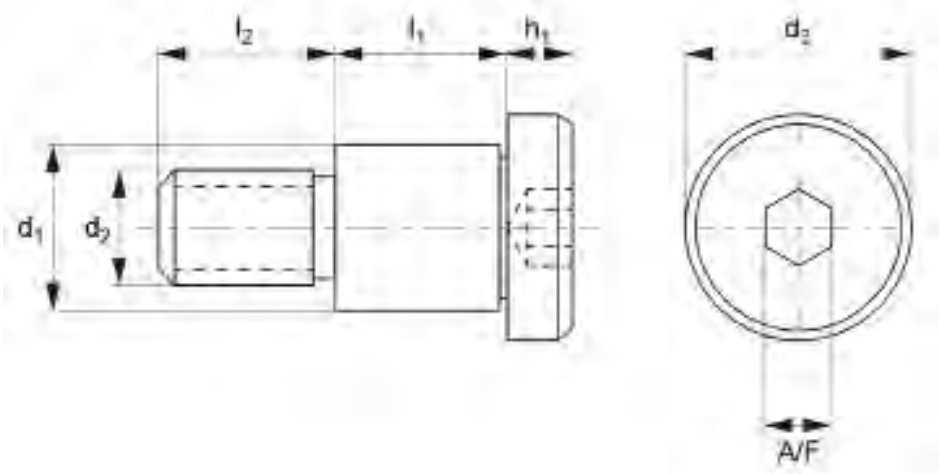



Part Number	Drive Type	d_1+0|-0.025	l_1+0.05|-0.0	d_2	d_3	l_2	Material
20225063	Torx Drive	4.0	8.0	M3	6.0	4.0	303 Stainless Steel
20225070	Torx Drive	4.0	10.0	M3	6.0	4.0	303 Stainless Steel
20245689	Torx Drive	4.0	12.0	M3	6.0	4.0	303 Stainless Steel
20245696	Torx Drive	4.0	14.0	M3	6.0	4.0	303 Stainless Steel
20245702	Torx Drive	4.0	16.0	M3	6.0	4.0	303 Stainless Steel
20245719	Torx Drive	4.0	18.0	M3	6.0	4.0	303 Stainless Steel
20245726	Torx Drive	4.0	20.0	M3	6.0	4.0	303 Stainless Steel
20245733	Torx Drive	4.0	25.0	M3	6.0	4.0	303 Stainless Steel
20245740	Torx Drive	4.0	30.0	M3	6.0	4.0	303 Stainless Steel
20245757	Torx Drive	4.0	35.0	M3	6.0	4.0	303 Stainless Steel
20245764	Torx Drive	4.0	40.0	M3	6.0	4.0	303 Stainless Steel
20245771	Torx Drive	4.0	45.0	M3	6.0	4.0	303 Stainless Steel
20245788	Torx Drive	4.0	50.0	M3	6.0	4.0	303 Stainless Steel
20142049	Hex Drive	5.0	10.0	M4	8.0	5.0	303 Stainless Steel
20142056	Hex Drive	5.0	12.0	M4	8.0	5.0	303 Stainless Steel
20142063	Hex Drive	5.0	14.0	M4	8.0	5.0	303 Stainless Steel
20142070	Hex Drive	5.0	16.0	M4	8.0	5.0	303 Stainless Steel
20142087	Hex Drive	5.0	20.0	M4	8.0	5.0	303 Stainless Steel
20142094	Hex Drive	5.0	25.0	M4	8.0	5.0	303 Stainless Steel
20142100	Hex Drive	5.0	30.0	M4	8.0	5.0	303 Stainless Steel
20142445	Hex Drive	5.0	4.0	M4	8.0	5.0	303 Stainless Steel

Shoulder Screws - Cap Head

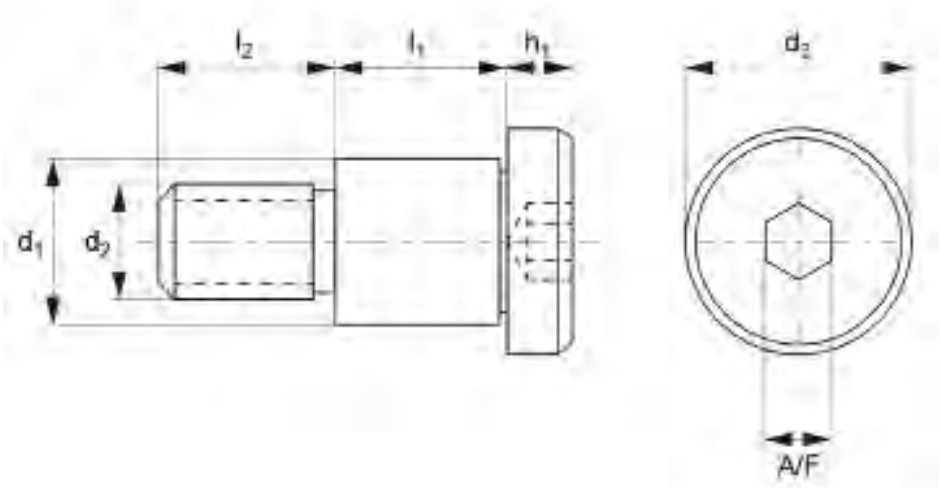



Part Number	Drive Type	d_1+0|-0.025	l_1+0.05|-0.0	d_2	d_3	l_2	Material
20142452	Hex Drive	5.0	5.0	M4	8.0	5.0	303 Stainless Steel
20142469	Hex Drive	5.0	6.0	M4	8.0	5.0	303 Stainless Steel
20142476	Hex Drive	5.0	8.0	M4	8.0	5.0	303 Stainless Steel
20143176	Hex Drive	5.0	40.0	M4	8.0	5.0	303 Stainless Steel
20143183	Hex Drive	5.0	50.0	M4	8.0	5.0	303 Stainless Steel
20144029	Hex Drive	5.0	2.0	M4	8.0	5.0	303 Stainless Steel
20144036	Hex Drive	5.0	3.0	M4	8.0	5.0	303 Stainless Steel
20144043	Hex Drive	5.0	7.0	M4	8.0	5.0	303 Stainless Steel
20144050	Hex Drive	5.0	18.0	M4	8.0	5.0	303 Stainless Steel
20144067	Hex Drive	5.0	35.0	M4	8.0	5.0	303 Stainless Steel
20144074	Hex Drive	5.0	45.0	M4	8.0	5.0	303 Stainless Steel
20243203	Hex Drive	5.0	2.0	M4	8.0	5.0	Titanium G5
20243210	Hex Drive	5.0	3.0	M4	8.0	5.0	Titanium G5
20243227	Hex Drive	5.0	4.0	M4	8.0	5.0	Titanium G5
20243234	Hex Drive	5.0	5.0	M4	8.0	5.0	Titanium G5
20243241	Hex Drive	5.0	6.0	M4	8.0	5.0	Titanium G5
20243258	Hex Drive	5.0	7.0	M4	8.0	5.0	Titanium G5
20243265	Hex Drive	5.0	8.0	M4	8.0	5.0	Titanium G5
20243272	Hex Drive	5.0	10.0	M4	8.0	5.0	Titanium G5
20243289	Hex Drive	5.0	12.0	M4	8.0	5.0	Titanium G5
20243296	Hex Drive	5.0	14.0	M4	8.0	5.0	Titanium G5

Shoulder Screws - Cap Head

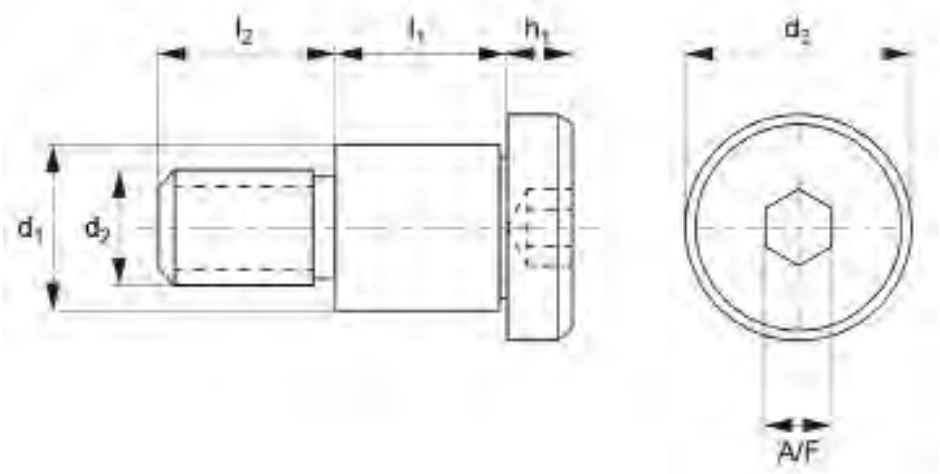



Part Number	Drive Type	d_1+0|-0.025	l_1+0.05|-0.0	d_2	d_3	l_2	Material
20243302	Hex Drive	5.0	16.0	M4	8.0	5.0	Titanium G5
20243319	Hex Drive	5.0	18.0	M4	8.0	5.0	Titanium G5
20243326	Hex Drive	5.0	20.0	M4	8.0	5.0	Titanium G5
20243333	Hex Drive	5.0	25.0	M4	8.0	5.0	Titanium G5
20243340	Hex Drive	5.0	30.0	M4	8.0	5.0	Titanium G5
20243357	Hex Drive	5.0	35.0	M4	8.0	5.0	Titanium G5
20243364	Hex Drive	5.0	40.0	M4	8.0	5.0	Titanium G5
20243371	Hex Drive	5.0	45.0	M4	8.0	5.0	Titanium G5
20243388	Hex Drive	5.0	50.0	M4	8.0	5.0	Titanium G5
20241704	Hex Drive	5.0	2.0	M4	8.0	5.0	Titanium G2
20241711	Hex Drive	5.0	3.0	M4	8.0	5.0	Titanium G2
20241728	Hex Drive	5.0	4.0	M4	8.0	5.0	Titanium G2
20241735	Hex Drive	5.0	5.0	M4	8.0	5.0	Titanium G2
20241742	Hex Drive	5.0	6.0	M4	8.0	5.0	Titanium G2
20241759	Hex Drive	5.0	7.0	M4	8.0	5.0	Titanium G2
20241766	Hex Drive	5.0	8.0	M4	8.0	5.0	Titanium G2
20241773	Hex Drive	5.0	10.0	M4	8.0	5.0	Titanium G2
20241780	Hex Drive	5.0	12.0	M4	8.0	5.0	Titanium G2
20241797	Hex Drive	5.0	14.0	M4	8.0	5.0	Titanium G2
20241803	Hex Drive	5.0	16.0	M4	8.0	5.0	Titanium G2
20241810	Hex Drive	5.0	18.0	M4	8.0	5.0	Titanium G2

Shoulder Screws - Cap Head

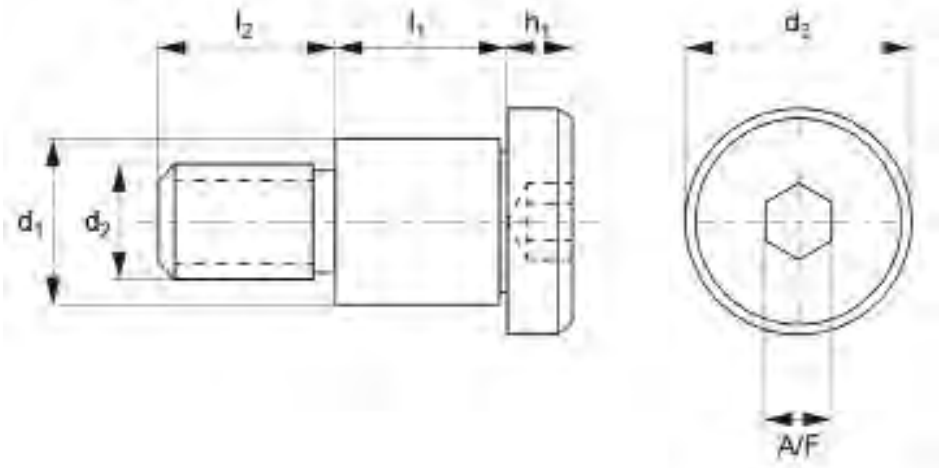



Part Number	Drive Type	d_1+0|-0.025	l_1+0.05|-0.0	d_2	d_3	l_2	Material
20241827	Hex Drive	5.0	20.0	M4	8.0	5.0	Titanium G2
20241834	Hex Drive	5.0	25.0	M4	8.0	5.0	Titanium G2
20241841	Hex Drive	5.0	30.0	M4	8.0	5.0	Titanium G2
20241858	Hex Drive	5.0	35.0	M4	8.0	5.0	Titanium G2
20241865	Hex Drive	5.0	40.0	M4	8.0	5.0	Titanium G2
20241872	Hex Drive	5.0	45.0	M4	8.0	5.0	Titanium G2
20241889	Hex Drive	5.0	50.0	M4	8.0	5.0	Titanium G2
20233082	Hex Drive	5.0	5.0	M4	8.0	5.0	316 Stainless Steel
20233099	Hex Drive	5.0	6.0	M4	8.0	5.0	316 Stainless Steel
20245337	Hex Drive	5.0	7.0	M4	8.0	5.0	316 Stainless Steel
20233105	Hex Drive	5.0	8.0	M4	8.0	5.0	316 Stainless Steel
20233112	Hex Drive	5.0	10.0	M4	8.0	5.0	316 Stainless Steel
20233129	Hex Drive	5.0	12.0	M4	8.0	5.0	316 Stainless Steel
20245344	Hex Drive	5.0	14.0	M4	8.0	5.0	316 Stainless Steel
20233136	Hex Drive	5.0	16.0	M4	8.0	5.0	316 Stainless Steel
20245351	Hex Drive	5.0	18.0	M4	8.0	5.0	316 Stainless Steel
20233143	Hex Drive	5.0	20.0	M4	8.0	5.0	316 Stainless Steel
20233150	Hex Drive	5.0	25.0	M4	8.0	5.0	316 Stainless Steel
20233167	Hex Drive	5.0	30.0	M4	8.0	5.0	316 Stainless Steel
20248857	Torx Drive	5.0	2.0	M4	8.0	5.0	316 Stainless Steel
20248864	Torx Drive	5.0	3.0	M4	8.0	5.0	316 Stainless Steel

Shoulder Screws - Cap Head

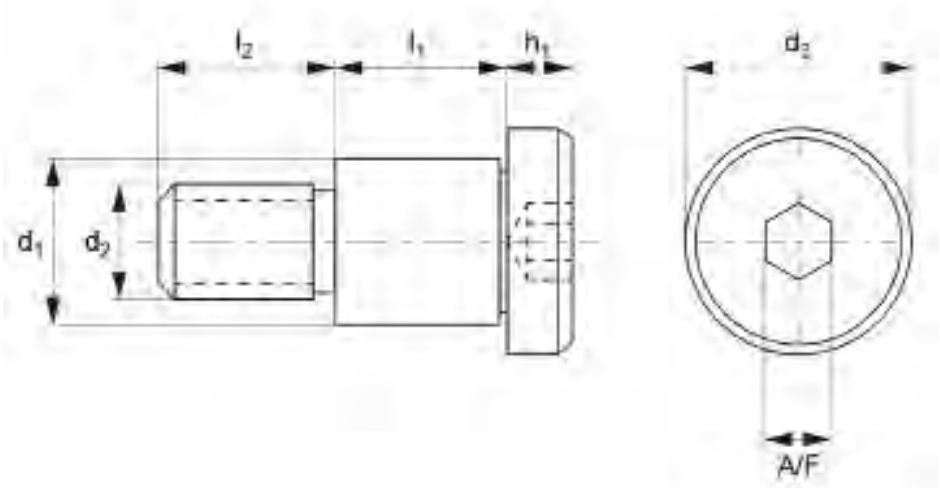



Part Number	Drive Type	d_1+0|-0.025	l_1+0.05|-0.0	d_2	d_3	l_2	Material
20248871	Torx Drive	5.0	4.0	M4	8.0	5.0	316 Stainless Steel
20248888	Torx Drive	5.0	5.0	M4	8.0	5.0	316 Stainless Steel
20234805	Torx Drive	5.0	6.0	M4	8.0	5.0	316 Stainless Steel
20248895	Torx Drive	5.0	7.0	M4	8.0	5.0	316 Stainless Steel
20234812	Torx Drive	5.0	8.0	M4	8.0	5.0	316 Stainless Steel
20234829	Torx Drive	5.0	10.0	M4	8.0	5.0	316 Stainless Steel
20234836	Torx Drive	5.0	12.0	M4	8.0	5.0	316 Stainless Steel
20248901	Torx Drive	5.0	14.0	M4	8.0	5.0	316 Stainless Steel
20234843	Torx Drive	5.0	16.0	M4	8.0	5.0	316 Stainless Steel
20248918	Torx Drive	5.0	18.0	M4	8.0	5.0	316 Stainless Steel
20234850	Torx Drive	5.0	20.0	M4	8.0	5.0	316 Stainless Steel
20234867	Torx Drive	5.0	25.0	M4	8.0	5.0	316 Stainless Steel
20234874	Torx Drive	5.0	30.0	M4	8.0	5.0	316 Stainless Steel
20248925	Torx Drive	5.0	35.0	M4	8.0	5.0	316 Stainless Steel
20248932	Torx Drive	5.0	40.0	M4	8.0	5.0	316 Stainless Steel
20248949	Torx Drive	5.0	45.0	M4	8.0	5.0	316 Stainless Steel
20248956	Torx Drive	5.0	50.0	M4	8.0	5.0	316 Stainless Steel
20230500	Hex Drive	5.0	2.0	M4	8.0	5.0	303 Stainless Steel
20230517	Hex Drive	5.0	3.0	M4	8.0	5.0	303 Stainless Steel
20230524	Hex Drive	5.0	4.0	M4	8.0	5.0	303 Stainless Steel
20230531	Hex Drive	5.0	5.0	M4	8.0	5.0	303 Stainless Steel

Shoulder Screws - Cap Head

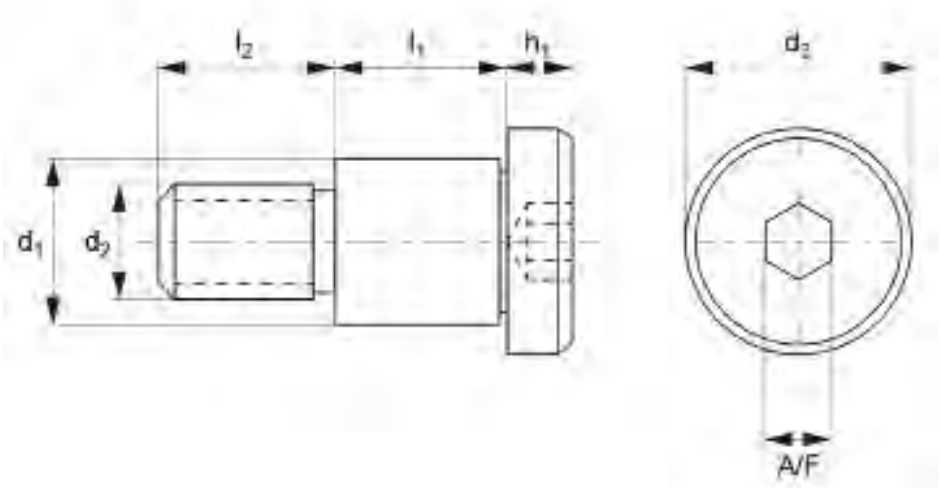



Part Number	Drive Type	d_1+0|-0.025	l_1+0.05|-0.0	d_2	d_3	l_2	Material
20230548	Hex Drive	5.0	6.0	M4	8.0	5.0	303 Stainless Steel
20230555	Hex Drive	5.0	7.0	M4	8.0	5.0	303 Stainless Steel
20230562	Hex Drive	5.0	8.0	M4	8.0	5.0	303 Stainless Steel
20230579	Hex Drive	5.0	10.0	M4	8.0	5.0	303 Stainless Steel
20230586	Hex Drive	5.0	12.0	M4	8.0	5.0	303 Stainless Steel
20230593	Hex Drive	5.0	14.0	M4	8.0	5.0	303 Stainless Steel
20230609	Hex Drive	5.0	16.0	M4	8.0	5.0	303 Stainless Steel
20230616	Hex Drive	5.0	18.0	M4	8.0	5.0	303 Stainless Steel
20230623	Hex Drive	5.0	20.0	M4	8.0	5.0	303 Stainless Steel
20230630	Hex Drive	5.0	25.0	M4	8.0	5.0	303 Stainless Steel
20230647	Hex Drive	5.0	30.0	M4	8.0	5.0	303 Stainless Steel
20230654	Hex Drive	5.0	35.0	M4	8.0	5.0	303 Stainless Steel
20230661	Hex Drive	5.0	40.0	M4	8.0	5.0	303 Stainless Steel
20230678	Hex Drive	5.0	45.0	M4	8.0	5.0	303 Stainless Steel
20230685	Hex Drive	5.0	50.0	M4	8.0	5.0	303 Stainless Steel
20231866	Slotted Drive	5.0	4.0	M4	8.0	5.0	303 Stainless Steel
20231873	Slotted Drive	5.0	5.0	M4	8.0	5.0	303 Stainless Steel
20231880	Slotted Drive	5.0	6.0	M4	8.0	5.0	303 Stainless Steel
20231897	Slotted Drive	5.0	8.0	M4	8.0	5.0	303 Stainless Steel
20231903	Slotted Drive	5.0	10.0	M4	8.0	5.0	303 Stainless Steel
20231910	Slotted Drive	5.0	12.0	M4	8.0	5.0	303 Stainless Steel

Shoulder Screws - Cap Head

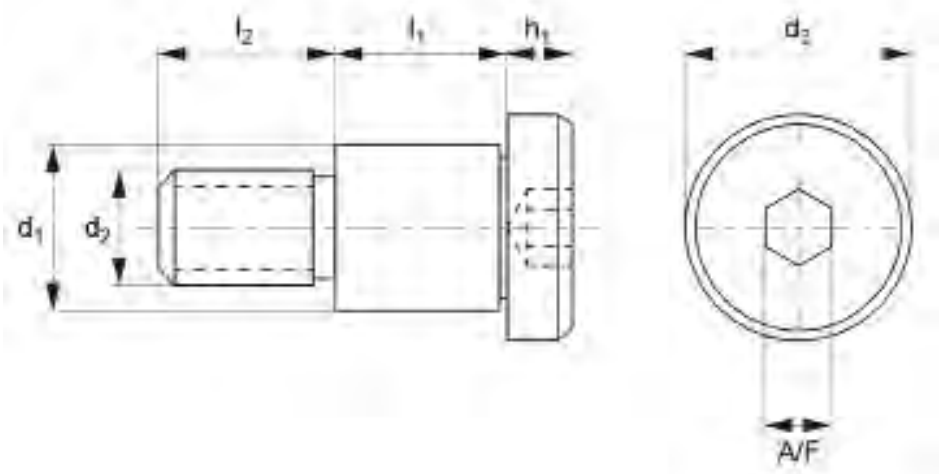



Part Number	Drive Type	d_1+0|-0.025	l_1+0.05|-0.0	d_2	d_3	l_2	Material
20231927	Slotted Drive	5.0	14.0	M4	8.0	5.0	303 Stainless Steel
20231934	Slotted Drive	5.0	16.0	M4	8.0	5.0	303 Stainless Steel
20231941	Slotted Drive	5.0	20.0	M4	8.0	5.0	303 Stainless Steel
20231958	Slotted Drive	5.0	25.0	M4	8.0	5.0	303 Stainless Steel
20231965	Slotted Drive	5.0	30.0	M4	8.0	5.0	303 Stainless Steel
20247836	Torx Drive	5.0	2.0	M4	8.0	5.0	303 Stainless Steel
20247843	Torx Drive	5.0	3.0	M4	8.0	5.0	303 Stainless Steel
20247850	Torx Drive	5.0	4.0	M4	8.0	5.0	303 Stainless Steel
20247867	Torx Drive	5.0	5.0	M4	8.0	5.0	303 Stainless Steel
20234263	Torx Drive	5.0	6.0	M4	8.0	5.0	303 Stainless Steel
20247874	Torx Drive	5.0	7.0	M4	8.0	5.0	303 Stainless Steel
20234270	Torx Drive	5.0	8.0	M4	8.0	5.0	303 Stainless Steel
20234287	Torx Drive	5.0	10.0	M4	8.0	5.0	303 Stainless Steel
20234294	Torx Drive	5.0	12.0	M4	8.0	5.0	303 Stainless Steel
20247881	Torx Drive	5.0	14.0	M4	8.0	5.0	303 Stainless Steel
20234300	Torx Drive	5.0	16.0	M4	8.0	5.0	303 Stainless Steel
20247898	Torx Drive	5.0	18.0	M4	8.0	5.0	303 Stainless Steel
20234317	Torx Drive	5.0	20.0	M4	8.0	5.0	303 Stainless Steel
20234324	Torx Drive	5.0	25.0	M4	8.0	5.0	303 Stainless Steel
20234331	Torx Drive	5.0	30.0	M4	8.0	5.0	303 Stainless Steel
20247904	Torx Drive	5.0	35.0	M4	8.0	5.0	303 Stainless Steel

Shoulder Screws - Cap Head

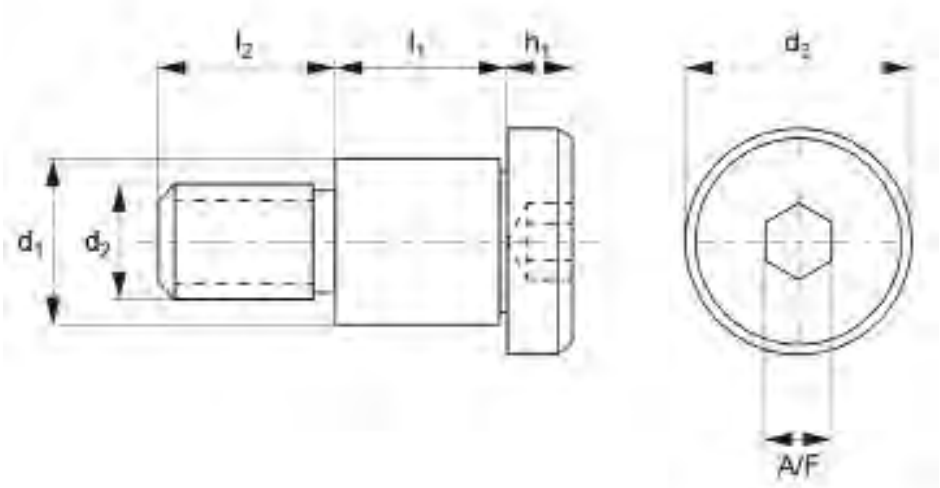



Part Number	Drive Type	d_1+0|-0.025	l_1+0.05|-0.0	d_2	d_3	l_2	Material
20247911	Torx Drive	5.0	40.0	M4	8.0	5.0	303 Stainless Steel
20247928	Torx Drive	5.0	45.0	M4	8.0	5.0	303 Stainless Steel
20247935	Torx Drive	5.0	50.0	M4	8.0	5.0	303 Stainless Steel
20222413	Hex Drive	5.0	4.0	M4	8.0	5.0	416 Stainless Steel
20222420	Hex Drive	5.0	5.0	M4	8.0	5.0	416 Stainless Steel
20222437	Hex Drive	5.0	6.0	M4	8.0	5.0	416 Stainless Steel
20222444	Hex Drive	5.0	8.0	M4	8.0	5.0	416 Stainless Steel
20222017	Hex Drive	5.0	10.0	M4	8.0	5.0	416 Stainless Steel
20222024	Hex Drive	5.0	12.0	M4	8.0	5.0	416 Stainless Steel
20222031	Hex Drive	5.0	14.0	M4	8.0	5.0	416 Stainless Steel
20222048	Hex Drive	5.0	16.0	M4	8.0	5.0	416 Stainless Steel
20222055	Hex Drive	5.0	20.0	M4	8.0	5.0	416 Stainless Steel
20222062	Hex Drive	5.0	25.0	M4	8.0	5.0	416 Stainless Steel
20222079	Hex Drive	5.0	30.0	M4	8.0	5.0	416 Stainless Steel
20228613	Hex Drive	5.0	5.0	M4	8.0	5.0	316 Stainless Steel
20228460	Hex Drive	5.0	6.0	M4	8.0	5.0	316 Stainless Steel
20244989	Hex Drive	5.0	7.0	M4	8.0	5.0	316 Stainless Steel
20228620	Hex Drive	5.0	8.0	M4	8.0	5.0	316 Stainless Steel
20222666	Hex Drive	5.0	10.0	M4	8.0	5.0	316 Stainless Steel
20222673	Hex Drive	5.0	12.0	M4	8.0	5.0	316 Stainless Steel
20244996	Hex Drive	5.0	14.0	M4	8.0	5.0	316 Stainless Steel

Shoulder Screws - Cap Head

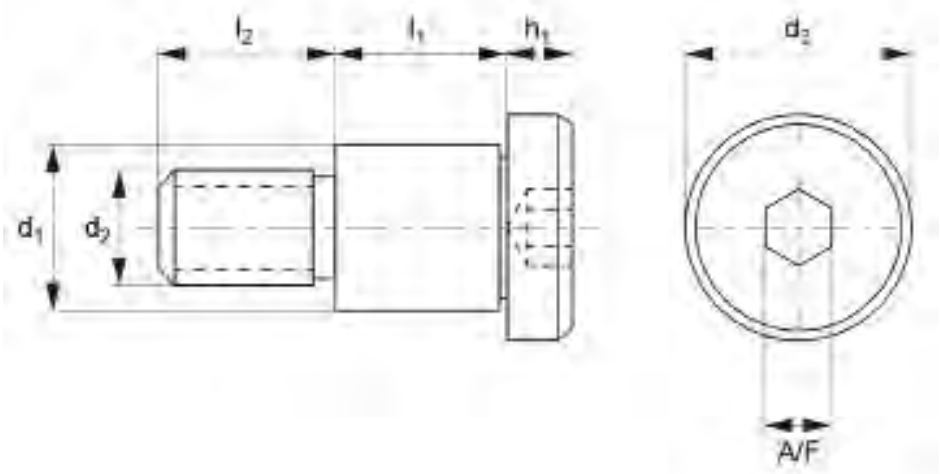



Part Number	Drive Type	d_1+0|-0.025	l_1+0.05|-0.0	d_2	d_3	l_2	Material
20222680	Hex Drive	5.0	16.0	M4	8.0	5.0	316 Stainless Steel
20245009	Hex Drive	5.0	18.0	M4	8.0	5.0	316 Stainless Steel
20222697	Hex Drive	5.0	20.0	M4	8.0	5.0	316 Stainless Steel
20222703	Hex Drive	5.0	25.0	M4	8.0	5.0	316 Stainless Steel
20222710	Hex Drive	5.0	30.0	M4	8.0	5.0	316 Stainless Steel
20246815	Torx Drive	5.0	2.0	M4	8.0	5.0	316 Stainless Steel
20246822	Torx Drive	5.0	3.0	M4	8.0	5.0	316 Stainless Steel
20246839	Torx Drive	5.0	4.0	M4	8.0	5.0	316 Stainless Steel
20246846	Torx Drive	5.0	5.0	M4	8.0	5.0	316 Stainless Steel
20233730	Torx Drive	5.0	6.0	M4	8.0	5.0	316 Stainless Steel
20246853	Torx Drive	5.0	7.0	M4	8.0	5.0	316 Stainless Steel
20233747	Torx Drive	5.0	8.0	M4	8.0	5.0	316 Stainless Steel
20233754	Torx Drive	5.0	10.0	M4	8.0	5.0	316 Stainless Steel
20233761	Torx Drive	5.0	12.0	M4	8.0	5.0	316 Stainless Steel
20246860	Torx Drive	5.0	14.0	M4	8.0	5.0	316 Stainless Steel
20233778	Torx Drive	5.0	16.0	M4	8.0	5.0	316 Stainless Steel
20246877	Torx Drive	5.0	18.0	M4	8.0	5.0	316 Stainless Steel
20233785	Torx Drive	5.0	20.0	M4	8.0	5.0	316 Stainless Steel
20233792	Torx Drive	5.0	25.0	M4	8.0	5.0	316 Stainless Steel
20233808	Torx Drive	5.0	30.0	M4	8.0	5.0	316 Stainless Steel
20246884	Torx Drive	5.0	35.0	M4	8.0	5.0	316 Stainless Steel

Shoulder Screws - Cap Head

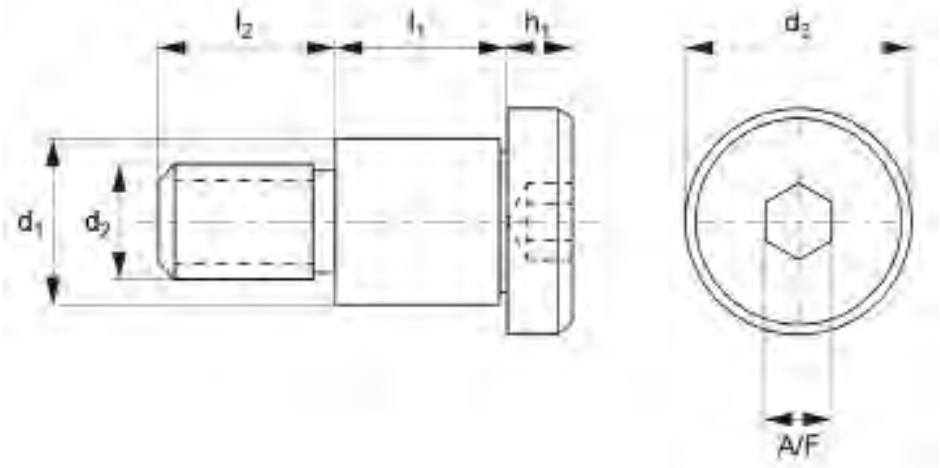



Part Number	Drive Type	d_1+0|-0.025	l_1+0.05|-0.0	d_2	d_3	l_2	Material
20246891	Torx Drive	5.0	40.0	M4	8.0	5.0	316 Stainless Steel
20246907	Torx Drive	5.0	45.0	M4	8.0	5.0	316 Stainless Steel
20246914	Torx Drive	5.0	50.0	M4	8.0	5.0	316 Stainless Steel
20221935	Slotted Drive	5.0	4.0	M4	8.0	5.0	303 Stainless Steel
20221959	Slotted Drive	5.0	5.0	M4	8.0	5.0	303 Stainless Steel
20221973	Slotted Drive	5.0	6.0	M4	8.0	5.0	303 Stainless Steel
20221997	Slotted Drive	5.0	8.0	M4	8.0	5.0	303 Stainless Steel
20221218	Slotted Drive	5.0	10.0	M4	8.0	5.0	303 Stainless Steel
20221232	Slotted Drive	5.0	12.0	M4	8.0	5.0	303 Stainless Steel
20221256	Slotted Drive	5.0	14.0	M4	8.0	5.0	303 Stainless Steel
20221270	Slotted Drive	5.0	16.0	M4	8.0	5.0	303 Stainless Steel
20221294	Slotted Drive	5.0	20.0	M4	8.0	5.0	303 Stainless Steel
20225803	Slotted Drive	5.0	25.0	M4	8.0	5.0	303 Stainless Steel
20221324	Slotted Drive	5.0	30.0	M4	8.0	5.0	303 Stainless Steel
20245795	Torx Drive	5.0	2.0	M4	8.0	5.0	303 Stainless Steel
20245801	Torx Drive	5.0	3.0	M4	8.0	5.0	303 Stainless Steel
20245818	Torx Drive	5.0	4.0	M4	8.0	5.0	303 Stainless Steel
20245825	Torx Drive	5.0	5.0	M4	8.0	5.0	303 Stainless Steel
20228491	Torx Drive	5.0	6.0	M4	8.0	5.0	303 Stainless Steel
20245832	Torx Drive	5.0	7.0	M4	8.0	5.0	303 Stainless Steel
20241315	Torx Drive	5.0	8.0	M4	8.0	5.0	303 Stainless Steel

Shoulder Screws - Cap Head

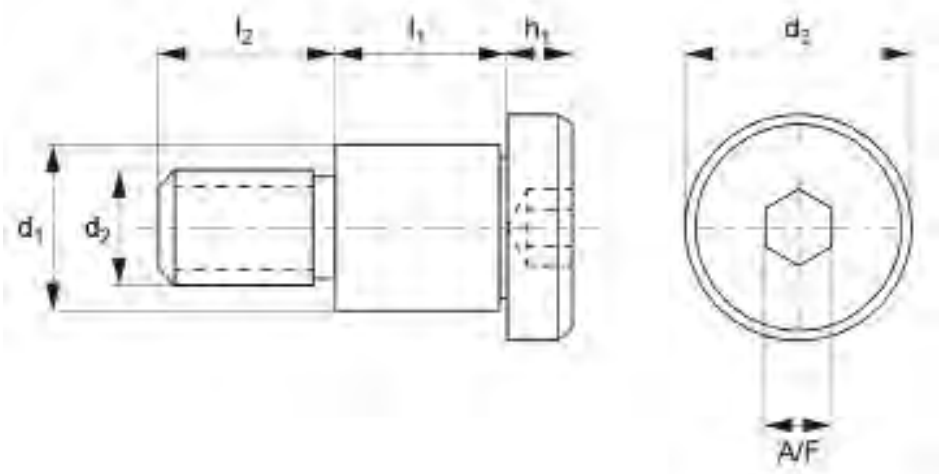



Part Number	Drive Type	d_1+0|-0.025	l_1+0.05|-0.0	d_2	d_3	l_2	Material
20225087	Torx Drive	5.0	10.0	M4	8.0	5.0	303 Stainless Steel
20225094	Torx Drive	5.0	12.0	M4	8.0	5.0	303 Stainless Steel
20245849	Torx Drive	5.0	14.0	M4	8.0	5.0	303 Stainless Steel
20225100	Torx Drive	5.0	16.0	M4	8.0	5.0	303 Stainless Steel
20245856	Torx Drive	5.0	18.0	M4	8.0	5.0	303 Stainless Steel
20225117	Torx Drive	5.0	20.0	M4	8.0	5.0	303 Stainless Steel
20225124	Torx Drive	5.0	25.0	M4	8.0	5.0	303 Stainless Steel
20225131	Torx Drive	5.0	30.0	M4	8.0	5.0	303 Stainless Steel
20245863	Torx Drive	5.0	35.0	M4	8.0	5.0	303 Stainless Steel
20245870	Torx Drive	5.0	40.0	M4	8.0	5.0	303 Stainless Steel
20245887	Torx Drive	5.0	45.0	M4	8.0	5.0	303 Stainless Steel
20245894	Torx Drive	5.0	50.0	M4	8.0	5.0	303 Stainless Steel
20142117	Hex Drive	6.0	4.0	M5	10.0	6.0	303 Stainless Steel
20142124	Hex Drive	6.0	5.0	M5	10.0	6.0	303 Stainless Steel
20142131	Hex Drive	6.0	6.0	M5	10.0	6.0	303 Stainless Steel
20142155	Hex Drive	6.0	8.0	M5	10.0	6.0	303 Stainless Steel
20142162	Hex Drive	6.0	10.0	M5	10.0	6.0	303 Stainless Steel
20142179	Hex Drive	6.0	12.0	M5	10.0	6.0	303 Stainless Steel
20142186	Hex Drive	6.0	14.0	M5	10.0	6.0	303 Stainless Steel
20142193	Hex Drive	6.0	16.0	M5	10.0	6.0	303 Stainless Steel
20142209	Hex Drive	6.0	20.0	M5	10.0	6.0	303 Stainless Steel

Shoulder Screws - Cap Head

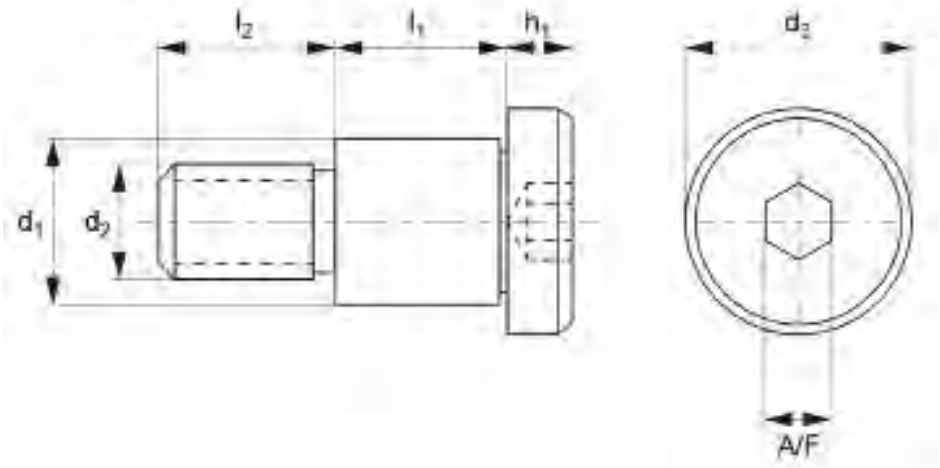



Part Number	Drive Type	d_1+0|-0.025	l_1+0.05|-0.0	d_2	d_3	l_2	Material
20142216	Hex Drive	6.0	25.0	M5	10.0	6.0	303 Stainless Steel
20142223	Hex Drive	6.0	30.0	M5	10.0	6.0	303 Stainless Steel
20142513	Hex Drive	6.0	70.0	M5	10.0	6.0	303 Stainless Steel
20143213	Hex Drive	6.0	80.0	M5	10.0	6.0	303 Stainless Steel
20143220	Hex Drive	6.0	90.0	M5	10.0	6.0	303 Stainless Steel
20144081	Hex Drive	6.0	2.0	M5	10.0	6.0	303 Stainless Steel
20144098	Hex Drive	6.0	3.0	M5	10.0	6.0	303 Stainless Steel
20144104	Hex Drive	6.0	7.0	M5	10.0	6.0	303 Stainless Steel
20144111	Hex Drive	6.0	18.0	M5	10.0	6.0	303 Stainless Steel
20144128	Hex Drive	6.0	35.0	M5	10.0	6.0	303 Stainless Steel
20144135	Hex Drive	6.0	40.0	M5	10.0	6.0	303 Stainless Steel
20144142	Hex Drive	6.0	45.0	M5	10.0	6.0	303 Stainless Steel
20144159	Hex Drive	6.0	50.0	M5	10.0	6.0	303 Stainless Steel
20144166	Hex Drive	6.0	55.0	M5	10.0	6.0	303 Stainless Steel
20144173	Hex Drive	6.0	60.0	M5	10.0	6.0	303 Stainless Steel
20144500	Hex Drive	6.0	100.0	M5	10.0	6.0	303 Stainless Steel
20243395	Hex Drive	6.0	2.0	M5	10.0	6.0	Titanium G5
20243401	Hex Drive	6.0	3.0	M5	10.0	6.0	Titanium G5
20243418	Hex Drive	6.0	4.0	M5	10.0	6.0	Titanium G5
20243425	Hex Drive	6.0	5.0	M5	10.0	6.0	Titanium G5
20243432	Hex Drive	6.0	6.0	M5	10.0	6.0	Titanium G5

Shoulder Screws - Cap Head

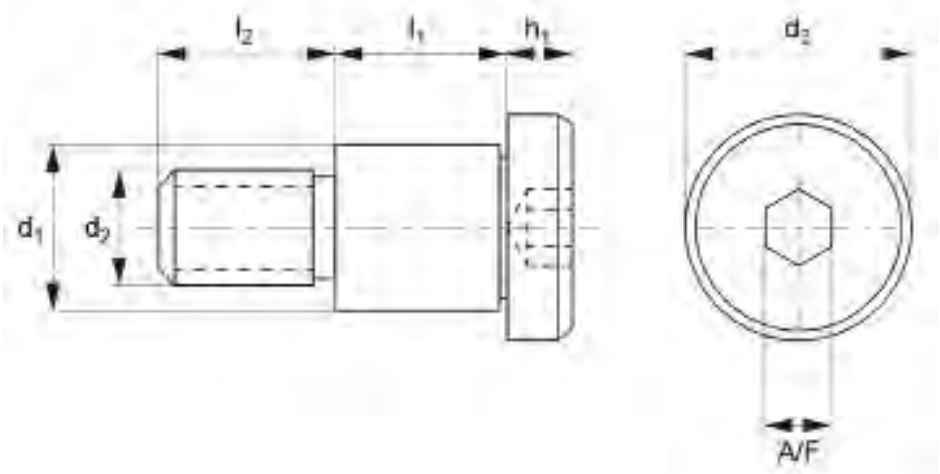



Part Number	Drive Type	d_1+0|-0.025	l_1+0.05|-0.0	d_2	d_3	l_2	Material
20243449	Hex Drive	6.0	7.0	M5	10.0	6.0	Titanium G5
20243456	Hex Drive	6.0	8.0	M5	10.0	6.0	Titanium G5
20243463	Hex Drive	6.0	10.0	M5	10.0	6.0	Titanium G5
20243470	Hex Drive	6.0	12.0	M5	10.0	6.0	Titanium G5
20243487	Hex Drive	6.0	14.0	M5	10.0	6.0	Titanium G5
20243494	Hex Drive	6.0	16.0	M5	10.0	6.0	Titanium G5
20243500	Hex Drive	6.0	18.0	M5	10.0	6.0	Titanium G5
20243517	Hex Drive	6.0	20.0	M5	10.0	6.0	Titanium G5
20243524	Hex Drive	6.0	25.0	M5	10.0	6.0	Titanium G5
20243531	Hex Drive	6.0	30.0	M5	10.0	6.0	Titanium G5
20243548	Hex Drive	6.0	35.0	M5	10.0	6.0	Titanium G5
20243555	Hex Drive	6.0	40.0	M5	10.0	6.0	Titanium G5
20243562	Hex Drive	6.0	45.0	M5	10.0	6.0	Titanium G5
20243579	Hex Drive	6.0	50.0	M5	10.0	6.0	Titanium G5
20243586	Hex Drive	6.0	55.0	M5	10.0	6.0	Titanium G5
20243593	Hex Drive	6.0	60.0	M5	10.0	6.0	Titanium G5
20243609	Hex Drive	6.0	70.0	M5	10.0	6.0	Titanium G5
20243616	Hex Drive	6.0	80.0	M5	10.0	6.0	Titanium G5
20243623	Hex Drive	6.0	90.0	M5	10.0	6.0	Titanium G5
20243630	Hex Drive	6.0	100.0	M5	10.0	6.0	Titanium G5
20241896	Hex Drive	6.0	2.0	M5	10.0	6.0	Titanium G2

Shoulder Screws - Cap Head

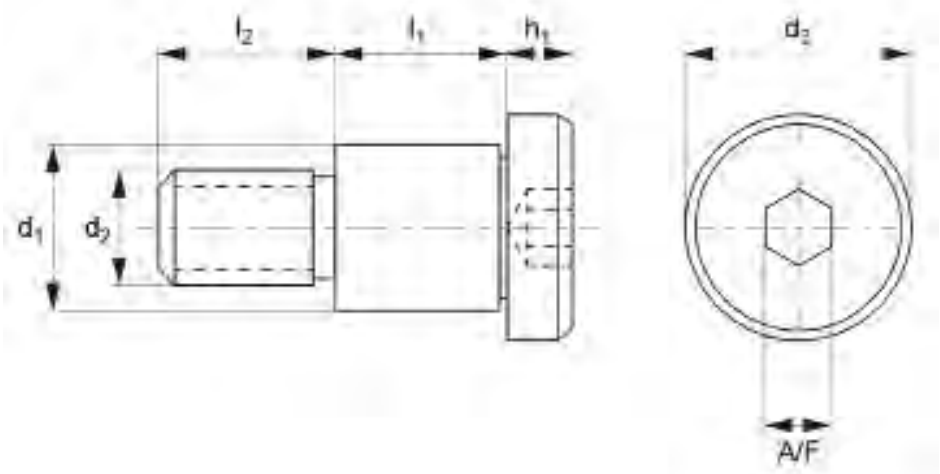



Part Number	Drive Type	d_1+0|-0.025	l_1+0.05|-0.0	d_2	d_3	l_2	Material
20241902	Hex Drive	6.0	3.0	M5	10.0	6.0	Titanium G2
20241919	Hex Drive	6.0	4.0	M5	10.0	6.0	Titanium G2
20241926	Hex Drive	6.0	5.0	M5	10.0	6.0	Titanium G2
20241933	Hex Drive	6.0	6.0	M5	10.0	6.0	Titanium G2
20241940	Hex Drive	6.0	7.0	M5	10.0	6.0	Titanium G2
20241957	Hex Drive	6.0	8.0	M5	10.0	6.0	Titanium G2
20241964	Hex Drive	6.0	10.0	M5	10.0	6.0	Titanium G2
20241971	Hex Drive	6.0	12.0	M5	10.0	6.0	Titanium G2
20241988	Hex Drive	6.0	14.0	M5	10.0	6.0	Titanium G2
20241995	Hex Drive	6.0	16.0	M5	10.0	6.0	Titanium G2
20242008	Hex Drive	6.0	18.0	M5	10.0	6.0	Titanium G2
20242015	Hex Drive	6.0	20.0	M5	10.0	6.0	Titanium G2
20242022	Hex Drive	6.0	25.0	M5	10.0	6.0	Titanium G2
20242039	Hex Drive	6.0	30.0	M5	10.0	6.0	Titanium G2
20242046	Hex Drive	6.0	35.0	M5	10.0	6.0	Titanium G2
20242053	Hex Drive	6.0	40.0	M5	10.0	6.0	Titanium G2
20242060	Hex Drive	6.0	45.0	M5	10.0	6.0	Titanium G2
20242077	Hex Drive	6.0	50.0	M5	10.0	6.0	Titanium G2
20242084	Hex Drive	6.0	55.0	M5	10.0	6.0	Titanium G2
20242091	Hex Drive	6.0	60.0	M5	10.0	6.0	Titanium G2
20242107	Hex Drive	6.0	70.0	M5	10.0	6.0	Titanium G2

Shoulder Screws - Cap Head

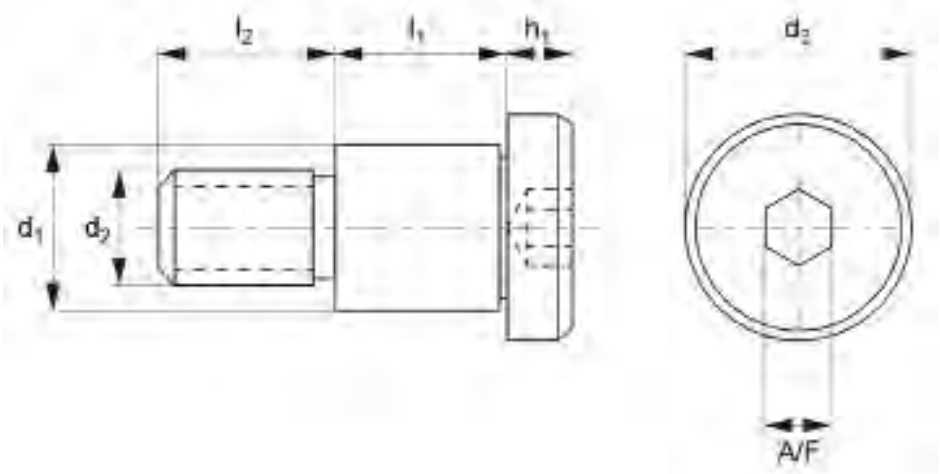



Part Number	Drive Type	d_1+0|-0.025	l_1+0.05|-0.0	d_2	d_3	l_2	Material
20242114	Hex Drive	6.0	80.0	M5	10.0	6.0	Titanium G2
20242121	Hex Drive	6.0	90.0	M5	10.0	6.0	Titanium G2
20242138	Hex Drive	6.0	100.0	M5	10.0	6.0	Titanium G2
20233174	Hex Drive	6.0	6.0	M5	10.0	6.0	316 Stainless Steel
20245368	Hex Drive	6.0	7.0	M5	10.0	6.0	316 Stainless Steel
20233181	Hex Drive	6.0	8.0	M5	10.0	6.0	316 Stainless Steel
20230159	Hex Drive	6.0	10.0	M5	10.0	6.0	316 Stainless Steel
20233198	Hex Drive	6.0	12.0	M5	10.0	6.0	316 Stainless Steel
20245375	Hex Drive	6.0	14.0	M5	10.0	6.0	316 Stainless Steel
20233204	Hex Drive	6.0	16.0	M5	10.0	6.0	316 Stainless Steel
20245382	Hex Drive	6.0	18.0	M5	10.0	6.0	316 Stainless Steel
20233211	Hex Drive	6.0	20.0	M5	10.0	6.0	316 Stainless Steel
20233228	Hex Drive	6.0	25.0	M5	10.0	6.0	316 Stainless Steel
20233235	Hex Drive	6.0	30.0	M5	10.0	6.0	316 Stainless Steel
20245399	Hex Drive	6.0	35.0	M5	10.0	6.0	316 Stainless Steel
20233242	Hex Drive	6.0	40.0	M5	10.0	6.0	316 Stainless Steel
20245405	Hex Drive	6.0	45.0	M5	10.0	6.0	316 Stainless Steel
20233259	Hex Drive	6.0	50.0	M5	10.0	6.0	316 Stainless Steel
20248963	Torx Drive	6.0	2.0	M5	10.0	6.0	316 Stainless Steel
20248970	Torx Drive	6.0	3.0	M5	10.0	6.0	316 Stainless Steel
20248987	Torx Drive	6.0	4.0	M5	10.0	6.0	316 Stainless Steel

Shoulder Screws - Cap Head

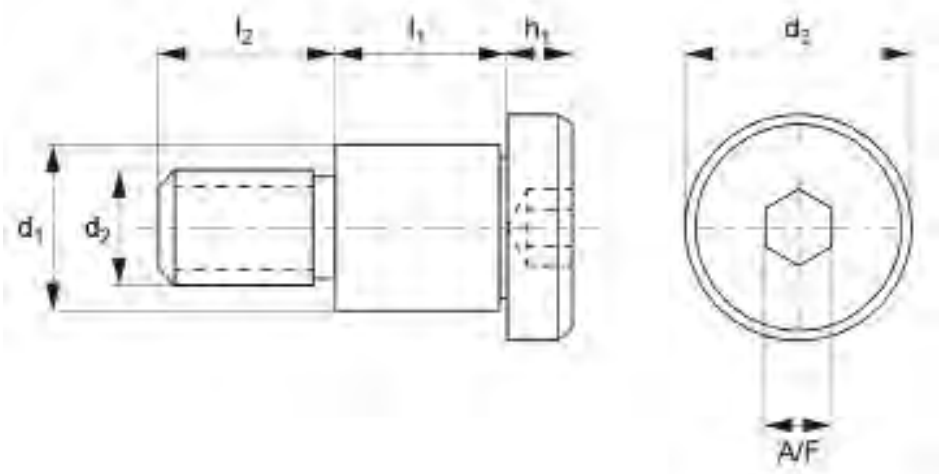



Part Number	Drive Type	d_1+0|-0.025	l_1+0.05|-0.0	d_2	d_3	l_2	Material
20248994	Torx Drive	6.0	5.0	M5	10.0	6.0	316 Stainless Steel
20234881	Torx Drive	6.0	6.0	M5	10.0	6.0	316 Stainless Steel
20249007	Torx Drive	6.0	7.0	M5	10.0	6.0	316 Stainless Steel
20234898	Torx Drive	6.0	8.0	M5	10.0	6.0	316 Stainless Steel
20234904	Torx Drive	6.0	10.0	M5	10.0	6.0	316 Stainless Steel
20234911	Torx Drive	6.0	12.0	M5	10.0	6.0	316 Stainless Steel
20249014	Torx Drive	6.0	14.0	M5	10.0	6.0	316 Stainless Steel
20234928	Torx Drive	6.0	16.0	M5	10.0	6.0	316 Stainless Steel
20249021	Torx Drive	6.0	18.0	M5	10.0	6.0	316 Stainless Steel
20234935	Torx Drive	6.0	20.0	M5	10.0	6.0	316 Stainless Steel
20234942	Torx Drive	6.0	25.0	M5	10.0	6.0	316 Stainless Steel
20234959	Torx Drive	6.0	30.0	M5	10.0	6.0	316 Stainless Steel
20249038	Torx Drive	6.0	35.0	M5	10.0	6.0	316 Stainless Steel
20234966	Torx Drive	6.0	40.0	M5	10.0	6.0	316 Stainless Steel
20249045	Torx Drive	6.0	45.0	M5	10.0	6.0	316 Stainless Steel
20234973	Torx Drive	6.0	50.0	M5	10.0	6.0	316 Stainless Steel
20249052	Torx Drive	6.0	55.0	M5	10.0	6.0	316 Stainless Steel
20249069	Torx Drive	6.0	60.0	M5	10.0	6.0	316 Stainless Steel
20249076	Torx Drive	6.0	70.0	M5	10.0	6.0	316 Stainless Steel
20249083	Torx Drive	6.0	80.0	M5	10.0	6.0	316 Stainless Steel
20249090	Torx Drive	6.0	90.0	M5	10.0	6.0	316 Stainless Steel

Shoulder Screws - Cap Head

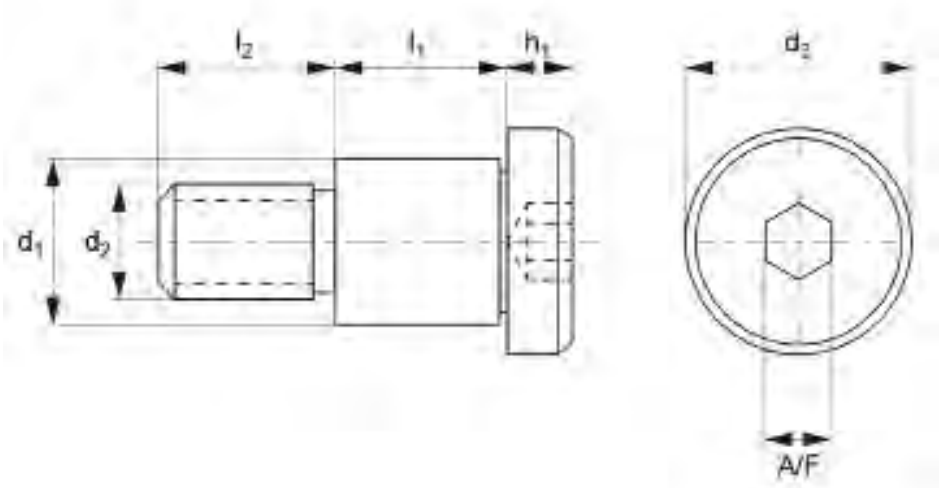



Part Number	Drive Type	d_1+0|-0.025	l_1+0.05|-0.0	d_2	d_3	l_2	Material
20249106	Torx Drive	6.0	100.0	M5	10.0	6.0	316 Stainless Steel
20230692	Hex Drive	6.0	2.0	M5	10.0	6.0	303 Stainless Steel
20230708	Hex Drive	6.0	3.0	M5	10.0	6.0	303 Stainless Steel
20230715	Hex Drive	6.0	4.0	M5	10.0	6.0	303 Stainless Steel
20230722	Hex Drive	6.0	5.0	M5	10.0	6.0	303 Stainless Steel
20230739	Hex Drive	6.0	6.0	M5	10.0	6.0	303 Stainless Steel
20230746	Hex Drive	6.0	7.0	M5	10.0	6.0	303 Stainless Steel
20230753	Hex Drive	6.0	8.0	M5	10.0	6.0	303 Stainless Steel
20230760	Hex Drive	6.0	10.0	M5	10.0	6.0	303 Stainless Steel
20230777	Hex Drive	6.0	12.0	M5	10.0	6.0	303 Stainless Steel
20230784	Hex Drive	6.0	14.0	M5	10.0	6.0	303 Stainless Steel
20230791	Hex Drive	6.0	16.0	M5	10.0	6.0	303 Stainless Steel
20230807	Hex Drive	6.0	18.0	M5	10.0	6.0	303 Stainless Steel
20230814	Hex Drive	6.0	20.0	M5	10.0	6.0	303 Stainless Steel
20230821	Hex Drive	6.0	25.0	M5	10.0	6.0	303 Stainless Steel
20230838	Hex Drive	6.0	30.0	M5	10.0	6.0	303 Stainless Steel
20230845	Hex Drive	6.0	35.0	M5	10.0	6.0	303 Stainless Steel
20230852	Hex Drive	6.0	40.0	M5	10.0	6.0	303 Stainless Steel
20230869	Hex Drive	6.0	45.0	M5	10.0	6.0	303 Stainless Steel
20230876	Hex Drive	6.0	50.0	M5	10.0	6.0	303 Stainless Steel
20230883	Hex Drive	6.0	55.0	M5	10.0	6.0	303 Stainless Steel

Shoulder Screws - Cap Head

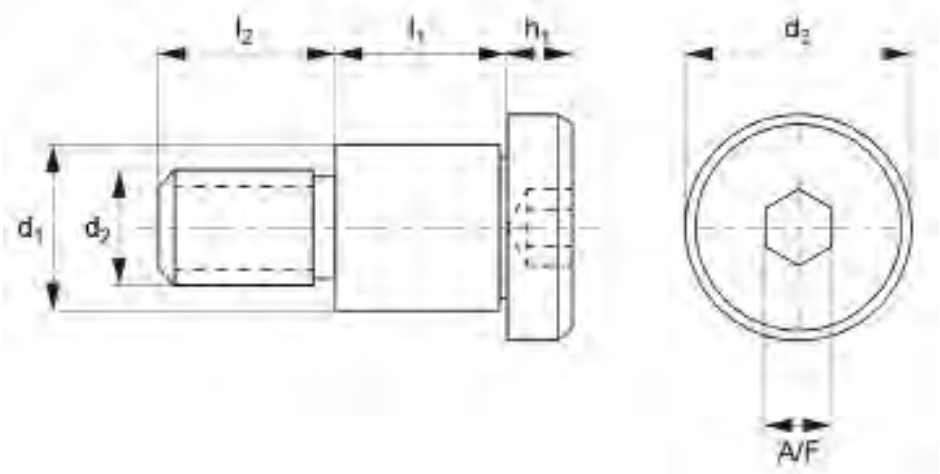



Part Number	Drive Type	d_1+0|-0.025	l_1+0.05|-0.0	d_2	d_3	l_2	Material
20230890	Hex Drive	6.0	60.0	M5	10.0	6.0	303 Stainless Steel
20230906	Hex Drive	6.0	70.0	M5	10.0	6.0	303 Stainless Steel
20230913	Hex Drive	6.0	80.0	M5	10.0	6.0	303 Stainless Steel
20230920	Hex Drive	6.0	90.0	M5	10.0	6.0	303 Stainless Steel
20230937	Hex Drive	6.0	100.0	M5	10.0	6.0	303 Stainless Steel
20231972	Slotted Drive	6.0	4.0	M5	10.0	6.0	303 Stainless Steel
20231989	Slotted Drive	6.0	5.0	M5	10.0	6.0	303 Stainless Steel
20231996	Slotted Drive	6.0	6.0	M5	10.0	6.0	303 Stainless Steel
20232009	Slotted Drive	6.0	8.0	M5	10.0	6.0	303 Stainless Steel
20232016	Slotted Drive	6.0	10.0	M5	10.0	6.0	303 Stainless Steel
20232023	Slotted Drive	6.0	12.0	M5	10.0	6.0	303 Stainless Steel
20232030	Slotted Drive	6.0	14.0	M5	10.0	6.0	303 Stainless Steel
20232047	Slotted Drive	6.0	16.0	M5	10.0	6.0	303 Stainless Steel
20232054	Slotted Drive	6.0	20.0	M5	10.0	6.0	303 Stainless Steel
20232061	Slotted Drive	6.0	25.0	M5	10.0	6.0	303 Stainless Steel
20232078	Slotted Drive	6.0	30.0	M5	10.0	6.0	303 Stainless Steel
20247942	Torx Drive	6.0	2.0	M5	10.0	6.0	303 Stainless Steel
20247959	Torx Drive	6.0	3.0	M5	10.0	6.0	303 Stainless Steel
20247966	Torx Drive	6.0	4.0	M5	10.0	6.0	303 Stainless Steel
20247973	Torx Drive	6.0	5.0	M5	10.0	6.0	303 Stainless Steel
20234348	Torx Drive	6.0	6.0	M5	10.0	6.0	303 Stainless Steel

Shoulder Screws - Cap Head

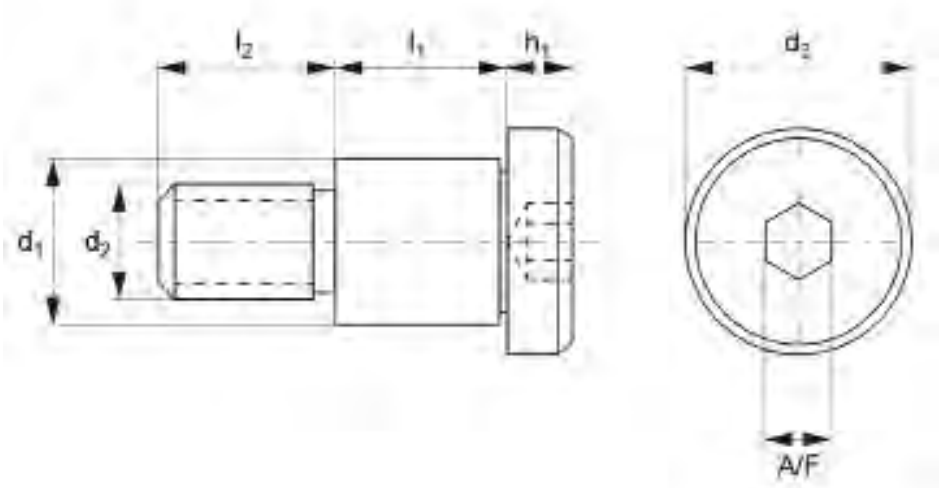



Part Number	Drive Type	d_1+0|-0.025	l_1+0.05|-0.0	d_2	d_3	l_2	Material
20247980	Torx Drive	6.0	7.0	M5	10.0	6.0	303 Stainless Steel
20234355	Torx Drive	6.0	8.0	M5	10.0	6.0	303 Stainless Steel
20234362	Torx Drive	6.0	10.0	M5	10.0	6.0	303 Stainless Steel
20234379	Torx Drive	6.0	12.0	M5	10.0	6.0	303 Stainless Steel
20247997	Torx Drive	6.0	14.0	M5	10.0	6.0	303 Stainless Steel
20234386	Torx Drive	6.0	16.0	M5	10.0	6.0	303 Stainless Steel
20248000	Torx Drive	6.0	18.0	M5	10.0	6.0	303 Stainless Steel
20234393	Torx Drive	6.0	20.0	M5	10.0	6.0	303 Stainless Steel
20234409	Torx Drive	6.0	25.0	M5	10.0	6.0	303 Stainless Steel
20234416	Torx Drive	6.0	30.0	M5	10.0	6.0	303 Stainless Steel
20248017	Torx Drive	6.0	35.0	M5	10.0	6.0	303 Stainless Steel
20234423	Torx Drive	6.0	40.0	M5	10.0	6.0	303 Stainless Steel
20248024	Torx Drive	6.0	45.0	M5	10.0	6.0	303 Stainless Steel
20234430	Torx Drive	6.0	50.0	M5	10.0	6.0	303 Stainless Steel
20248031	Torx Drive	6.0	55.0	M5	10.0	6.0	303 Stainless Steel
20248048	Torx Drive	6.0	60.0	M5	10.0	6.0	303 Stainless Steel
20248055	Torx Drive	6.0	70.0	M5	10.0	6.0	303 Stainless Steel
20248062	Torx Drive	6.0	80.0	M5	10.0	6.0	303 Stainless Steel
20248079	Torx Drive	6.0	90.0	M5	10.0	6.0	303 Stainless Steel
20248086	Torx Drive	6.0	100.0	M5	10.0	6.0	303 Stainless Steel
20222086	Hex Drive	6.0	4.0	M5	10.0	6.0	416 Stainless Steel

Shoulder Screws - Cap Head

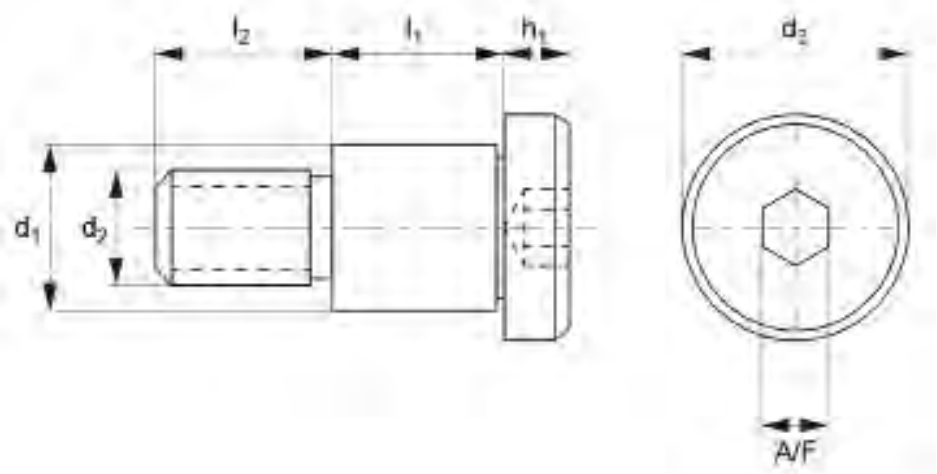



Part Number	Drive Type	d_1+0|-0.025	l_1+0.05|-0.0	d_2	d_3	l_2	Material
20222093	Hex Drive	6.0	5.0	M5	10.0	6.0	416 Stainless Steel
20222109	Hex Drive	6.0	6.0	M5	10.0	6.0	416 Stainless Steel
20222123	Hex Drive	6.0	8.0	M5	10.0	6.0	416 Stainless Steel
20222130	Hex Drive	6.0	10.0	M5	10.0	6.0	416 Stainless Steel
20222147	Hex Drive	6.0	12.0	M5	10.0	6.0	416 Stainless Steel
20222154	Hex Drive	6.0	14.0	M5	10.0	6.0	416 Stainless Steel
20222161	Hex Drive	6.0	16.0	M5	10.0	6.0	416 Stainless Steel
20222178	Hex Drive	6.0	20.0	M5	10.0	6.0	416 Stainless Steel
20222185	Hex Drive	6.0	25.0	M5	10.0	6.0	416 Stainless Steel
20222192	Hex Drive	6.0	30.0	M5	10.0	6.0	416 Stainless Steel
20226923	Hex Drive	6.0	6.0	M5	10.0	6.0	316 Stainless Steel
20245016	Hex Drive	6.0	7.0	M5	10.0	6.0	316 Stainless Steel
20228637	Hex Drive	6.0	8.0	M5	10.0	6.0	316 Stainless Steel
20222727	Hex Drive	6.0	10.0	M5	10.0	6.0	316 Stainless Steel
20222734	Hex Drive	6.0	12.0	M5	10.0	6.0	316 Stainless Steel
20245023	Hex Drive	6.0	14.0	M5	10.0	6.0	316 Stainless Steel
20222741	Hex Drive	6.0	16.0	M5	10.0	6.0	316 Stainless Steel
20245030	Hex Drive	6.0	18.0	M5	10.0	6.0	316 Stainless Steel
20222758	Hex Drive	6.0	20.0	M5	10.0	6.0	316 Stainless Steel
20222765	Hex Drive	6.0	25.0	M5	10.0	6.0	316 Stainless Steel
20222772	Hex Drive	6.0	30.0	M5	10.0	6.0	316 Stainless Steel

Shoulder Screws - Cap Head

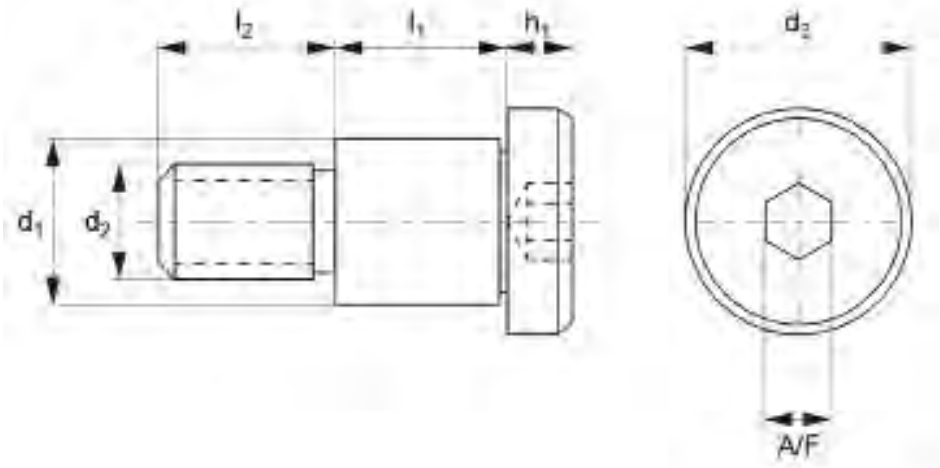



Part Number	Drive Type	d_1+0|-0.025	l_1+0.05|-0.0	d_2	d_3	l_2	Material
20245047	Hex Drive	6.0	35.0	M5	10.0	6.0	316 Stainless Steel
20222789	Hex Drive	6.0	40.0	M5	10.0	6.0	316 Stainless Steel
20245054	Hex Drive	6.0	45.0	M5	10.0	6.0	316 Stainless Steel
20222796	Hex Drive	6.0	50.0	M5	10.0	6.0	316 Stainless Steel
20246921	Torx Drive	6.0	2.0	M5	10.0	6.0	316 Stainless Steel
20246938	Torx Drive	6.0	3.0	M5	10.0	6.0	316 Stainless Steel
20246945	Torx Drive	6.0	4.0	M5	10.0	6.0	316 Stainless Steel
20246952	Torx Drive	6.0	5.0	M5	10.0	6.0	316 Stainless Steel
20233815	Torx Drive	6.0	6.0	M5	10.0	6.0	316 Stainless Steel
20246969	Torx Drive	6.0	7.0	M5	10.0	6.0	316 Stainless Steel
20233822	Torx Drive	6.0	8.0	M5	10.0	6.0	316 Stainless Steel
20233839	Torx Drive	6.0	10.0	M5	10.0	6.0	316 Stainless Steel
20233846	Torx Drive	6.0	12.0	M5	10.0	6.0	316 Stainless Steel
20246976	Torx Drive	6.0	14.0	M5	10.0	6.0	316 Stainless Steel
20233853	Torx Drive	6.0	16.0	M5	10.0	6.0	316 Stainless Steel
20246983	Torx Drive	6.0	18.0	M5	10.0	6.0	316 Stainless Steel
20233860	Torx Drive	6.0	20.0	M5	10.0	6.0	316 Stainless Steel
20233877	Torx Drive	6.0	25.0	M5	10.0	6.0	316 Stainless Steel
20233884	Torx Drive	6.0	30.0	M5	10.0	6.0	316 Stainless Steel
20246990	Torx Drive	6.0	35.0	M5	10.0	6.0	316 Stainless Steel
20233891	Torx Drive	6.0	40.0	M5	10.0	6.0	316 Stainless Steel

Shoulder Screws - Cap Head

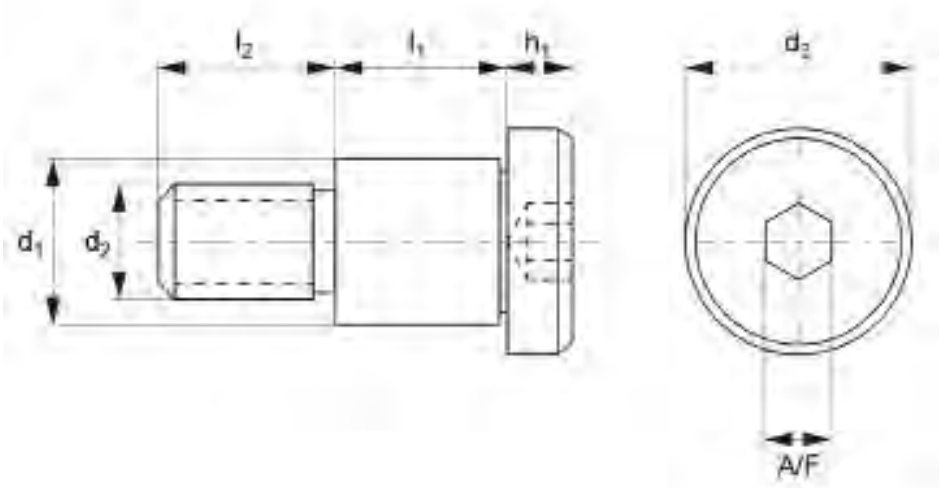



Part Number	Drive Type	d_1+0|-0.025	l_1+0.05|-0.0	d_2	d_3	l_2	Material
20247003	Torx Drive	6.0	45.0	M5	10.0	6.0	316 Stainless Steel
20233907	Torx Drive	6.0	50.0	M5	10.0	6.0	316 Stainless Steel
20247010	Torx Drive	6.0	55.0	M5	10.0	6.0	316 Stainless Steel
20247027	Torx Drive	6.0	60.0	M5	10.0	6.0	316 Stainless Steel
20247034	Torx Drive	6.0	70.0	M5	10.0	6.0	316 Stainless Steel
20247041	Torx Drive	6.0	80.0	M5	10.0	6.0	316 Stainless Steel
20247058	Torx Drive	6.0	90.0	M5	10.0	6.0	316 Stainless Steel
20247065	Torx Drive	6.0	100.0	M5	10.0	6.0	316 Stainless Steel
20221348	Slotted Drive	6.0	4.0	M5	10.0	6.0	303 Stainless Steel
20221362	Slotted Drive	6.0	5.0	M5	10.0	6.0	303 Stainless Steel
20221386	Slotted Drive	6.0	6.0	M5	10.0	6.0	303 Stainless Steel
20221423	Slotted Drive	6.0	8.0	M5	10.0	6.0	303 Stainless Steel
20221447	Slotted Drive	6.0	10.0	M5	10.0	6.0	303 Stainless Steel
20222567	Slotted Drive	6.0	12.0	M5	10.0	6.0	303 Stainless Steel
20221478	Slotted Drive	6.0	14.0	M5	10.0	6.0	303 Stainless Steel
20221492	Slotted Drive	6.0	16.0	M5	10.0	6.0	303 Stainless Steel
20221515	Slotted Drive	6.0	20.0	M5	10.0	6.0	303 Stainless Steel
20221539	Slotted Drive	6.0	25.0	M5	10.0	6.0	303 Stainless Steel
20221553	Slotted Drive	6.0	30.0	M5	10.0	6.0	303 Stainless Steel
20245900	Torx Drive	6.0	2.0	M5	10.0	6.0	303 Stainless Steel
20245917	Torx Drive	6.0	3.0	M5	10.0	6.0	303 Stainless Steel

Shoulder Screws - Cap Head

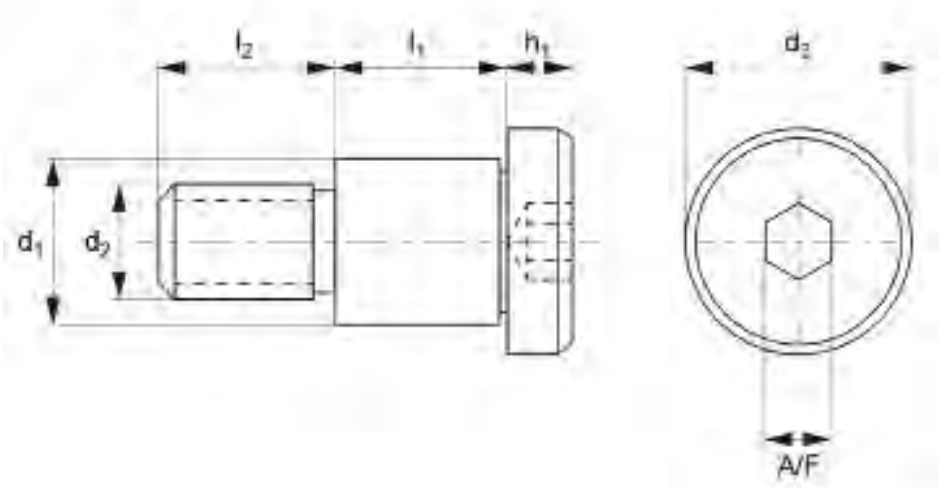



Part Number	Drive Type	d_1+0|-0.025	l_1+0.05|-0.0	d_2	d_3	l_2	Material
20245924	Torx Drive	6.0	4.0	M5	10.0	6.0	303 Stainless Steel
20245931	Torx Drive	6.0	5.0	M5	10.0	6.0	303 Stainless Steel
20230012	Torx Drive	6.0	6.0	M5	10.0	6.0	303 Stainless Steel
20245948	Torx Drive	6.0	7.0	M5	10.0	6.0	303 Stainless Steel
20230104	Torx Drive	6.0	8.0	M5	10.0	6.0	303 Stainless Steel
20225148	Torx Drive	6.0	10.0	M5	10.0	6.0	303 Stainless Steel
20225155	Torx Drive	6.0	12.0	M5	10.0	6.0	303 Stainless Steel
20245955	Torx Drive	6.0	14.0	M5	10.0	6.0	303 Stainless Steel
20225162	Torx Drive	6.0	16.0	M5	10.0	6.0	303 Stainless Steel
20245962	Torx Drive	6.0	18.0	M5	10.0	6.0	303 Stainless Steel
20225179	Torx Drive	6.0	20.0	M5	10.0	6.0	303 Stainless Steel
20225186	Torx Drive	6.0	25.0	M5	10.0	6.0	303 Stainless Steel
20225193	Torx Drive	6.0	30.0	M5	10.0	6.0	303 Stainless Steel
20245979	Torx Drive	6.0	35.0	M5	10.0	6.0	303 Stainless Steel
20225209	Torx Drive	6.0	40.0	M5	10.0	6.0	303 Stainless Steel
20245986	Torx Drive	6.0	45.0	M5	10.0	6.0	303 Stainless Steel
20225216	Torx Drive	6.0	50.0	M5	10.0	6.0	303 Stainless Steel
20245993	Torx Drive	6.0	55.0	M5	10.0	6.0	303 Stainless Steel
20246006	Torx Drive	6.0	60.0	M5	10.0	6.0	303 Stainless Steel
20246013	Torx Drive	6.0	70.0	M5	10.0	6.0	303 Stainless Steel
20246020	Torx Drive	6.0	80.0	M5	10.0	6.0	303 Stainless Steel

Shoulder Screws - Cap Head

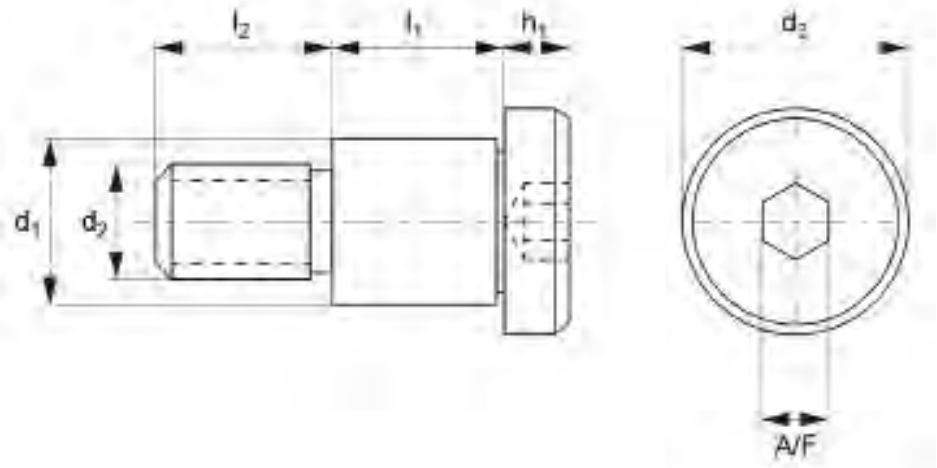



Part Number	Drive Type	d_1+0|-0.025	l_1+0.05|-0.0	d_2	d_3	l_2	Material
20246037	Torx Drive	6.0	90.0	M5	10.0	6.0	303 Stainless Steel
20246044	Torx Drive	6.0	100.0	M5	10.0	6.0	303 Stainless Steel
20141882	Hex Drive	8.0	60.0	M6	12.0	11.0	303 Stainless Steel
20142230	Hex Drive	8.0	6.0	M6	12.0	11.0	303 Stainless Steel
20142247	Hex Drive	8.0	8.0	M6	12.0	11.0	303 Stainless Steel
20142261	Hex Drive	8.0	10.0	M6	12.0	11.0	303 Stainless Steel
20142278	Hex Drive	8.0	12.0	M6	12.0	11.0	303 Stainless Steel
20142285	Hex Drive	8.0	16.0	M6	12.0	11.0	303 Stainless Steel
20142292	Hex Drive	8.0	20.0	M6	12.0	11.0	303 Stainless Steel
20142483	Hex Drive	8.0	70.0	M6	12.0	11.0	303 Stainless Steel
20142490	Hex Drive	8.0	14.0	M6	12.0	11.0	303 Stainless Steel
20142506	Hex Drive	8.0	30.0	M6	12.0	11.0	303 Stainless Steel
20142872	Hex Drive	8.0	25.0	M6	12.0	11.0	303 Stainless Steel
20143114	Hex Drive	8.0	100.0	M6	12.0	11.0	303 Stainless Steel
20143152	Hex Drive	8.0	35.0	M6	12.0	11.0	303 Stainless Steel
20143237	Hex Drive	8.0	80.0	M6	12.0	11.0	303 Stainless Steel
20143244	Hex Drive	8.0	90.0	M6	12.0	11.0	303 Stainless Steel
20144180	Hex Drive	8.0	4.0	M6	12.0	11.0	303 Stainless Steel
20144197	Hex Drive	8.0	5.0	M6	12.0	11.0	303 Stainless Steel
20144203	Hex Drive	8.0	7.0	M6	12.0	11.0	303 Stainless Steel
20144210	Hex Drive	8.0	18.0	M6	12.0	11.0	303 Stainless Steel

Shoulder Screws - Cap Head

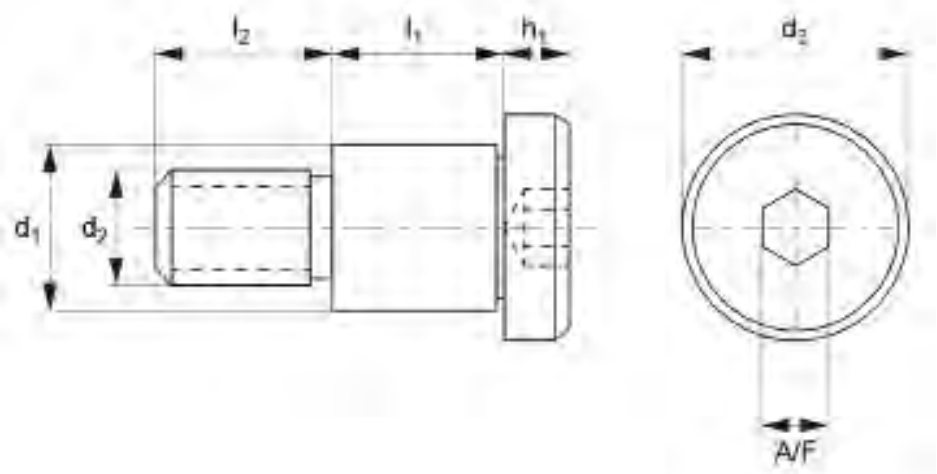



Part Number	Drive Type	d_1+0|-0.025	l_1+0.05|-0.0	d_2	d_3	l_2	Material
20144227	Hex Drive	8.0	40.0	M6	12.0	11.0	303 Stainless Steel
20144234	Hex Drive	8.0	45.0	M6	12.0	11.0	303 Stainless Steel
20144241	Hex Drive	8.0	50.0	M6	12.0	11.0	303 Stainless Steel
20144517	Hex Drive	8.0	55.0	M6	12.0	11.0	303 Stainless Steel
20144524	Hex Drive	8.0	65.0	M6	12.0	11.0	303 Stainless Steel
20144531	Hex Drive	8.0	75.0	M6	12.0	11.0	303 Stainless Steel
20243647	Hex Drive	8.0	4.0	M6	12.0	11.0	Titanium G5
20243654	Hex Drive	8.0	5.0	M6	12.0	11.0	Titanium G5
20243661	Hex Drive	8.0	6.0	M6	12.0	11.0	Titanium G5
20243678	Hex Drive	8.0	7.0	M6	12.0	11.0	Titanium G5
20243685	Hex Drive	8.0	8.0	M6	12.0	11.0	Titanium G5
20243692	Hex Drive	8.0	10.0	M6	12.0	11.0	Titanium G5
20243708	Hex Drive	8.0	12.0	M6	12.0	11.0	Titanium G5
20243715	Hex Drive	8.0	14.0	M6	12.0	11.0	Titanium G5
20243722	Hex Drive	8.0	16.0	M6	12.0	11.0	Titanium G5
20243739	Hex Drive	8.0	18.0	M6	12.0	11.0	Titanium G5
20243746	Hex Drive	8.0	20.0	M6	12.0	11.0	Titanium G5
20243753	Hex Drive	8.0	25.0	M6	12.0	11.0	Titanium G5
20243760	Hex Drive	8.0	30.0	M6	12.0	11.0	Titanium G5
20243777	Hex Drive	8.0	35.0	M6	12.0	11.0	Titanium G5
20243784	Hex Drive	8.0	40.0	M6	12.0	11.0	Titanium G5

Shoulder Screws - Cap Head

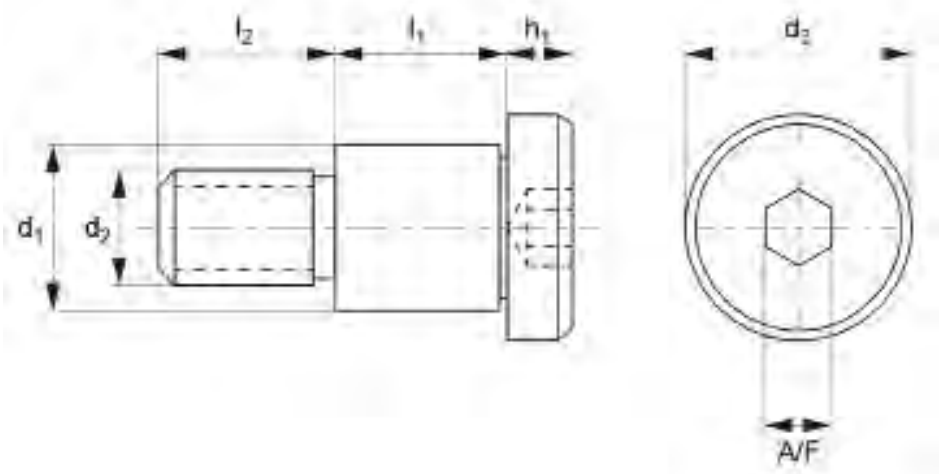



Part Number	Drive Type	d_1+0|-0.025	l_1+0.05|-0.0	d_2	d_3	l_2	Material
20243791	Hex Drive	8.0	45.0	M6	12.0	11.0	Titanium G5
20243807	Hex Drive	8.0	50.0	M6	12.0	11.0	Titanium G5
20243814	Hex Drive	8.0	55.0	M6	12.0	11.0	Titanium G5
20243821	Hex Drive	8.0	60.0	M6	12.0	11.0	Titanium G5
20243838	Hex Drive	8.0	65.0	M6	12.0	11.0	Titanium G5
20243845	Hex Drive	8.0	70.0	M6	12.0	11.0	Titanium G5
20243852	Hex Drive	8.0	75.0	M6	12.0	11.0	Titanium G5
20243869	Hex Drive	8.0	80.0	M6	12.0	11.0	Titanium G5
20243876	Hex Drive	8.0	90.0	M6	12.0	11.0	Titanium G5
20243883	Hex Drive	8.0	100.0	M6	12.0	11.0	Titanium G5
20242145	Hex Drive	8.0	4.0	M6	12.0	11.0	Titanium G2
20242152	Hex Drive	8.0	5.0	M6	12.0	11.0	Titanium G2
20242169	Hex Drive	8.0	6.0	M6	12.0	11.0	Titanium G2
20242176	Hex Drive	8.0	7.0	M6	12.0	11.0	Titanium G2
20242183	Hex Drive	8.0	8.0	M6	12.0	11.0	Titanium G2
20242190	Hex Drive	8.0	10.0	M6	12.0	11.0	Titanium G2
20242206	Hex Drive	8.0	12.0	M6	12.0	11.0	Titanium G2
20242213	Hex Drive	8.0	14.0	M6	12.0	11.0	Titanium G2
20242220	Hex Drive	8.0	16.0	M6	12.0	11.0	Titanium G2
20242237	Hex Drive	8.0	18.0	M6	12.0	11.0	Titanium G2
20242244	Hex Drive	8.0	20.0	M6	12.0	11.0	Titanium G2

Shoulder Screws - Cap Head

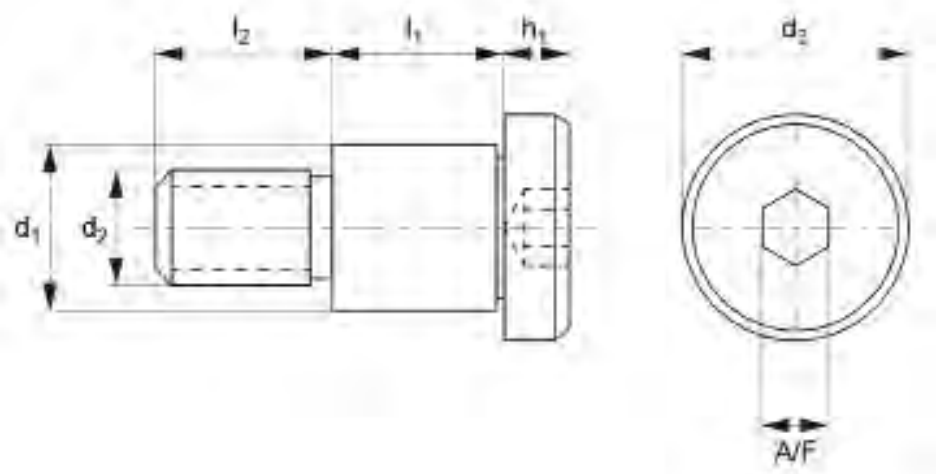



Part Number	Drive Type	d_1+0|-0.025	l_1+0.05|-0.0	d_2	d_3	l_2	Material
20242251	Hex Drive	8.0	25.0	M6	12.0	11.0	Titanium G2
20242268	Hex Drive	8.0	30.0	M6	12.0	11.0	Titanium G2
20242275	Hex Drive	8.0	35.0	M6	12.0	11.0	Titanium G2
20242282	Hex Drive	8.0	40.0	M6	12.0	11.0	Titanium G2
20242299	Hex Drive	8.0	45.0	M6	12.0	11.0	Titanium G2
20242305	Hex Drive	8.0	50.0	M6	12.0	11.0	Titanium G2
20242312	Hex Drive	8.0	55.0	M6	12.0	11.0	Titanium G2
20242329	Hex Drive	8.0	60.0	M6	12.0	11.0	Titanium G2
20242336	Hex Drive	8.0	65.0	M6	12.0	11.0	Titanium G2
20242343	Hex Drive	8.0	70.0	M6	12.0	11.0	Titanium G2
20242350	Hex Drive	8.0	75.0	M6	12.0	11.0	Titanium G2
20242367	Hex Drive	8.0	80.0	M6	12.0	11.0	Titanium G2
20242374	Hex Drive	8.0	90.0	M6	12.0	11.0	Titanium G2
20242381	Hex Drive	8.0	100.0	M6	12.0	11.0	Titanium G2
20233266	Hex Drive	8.0	8.0	M6	12.0	11.0	316 Stainless Steel
20233273	Hex Drive	8.0	10.0	M6	12.0	11.0	316 Stainless Steel
20233280	Hex Drive	8.0	12.0	M6	12.0	11.0	316 Stainless Steel
20245412	Hex Drive	8.0	14.0	M6	12.0	11.0	316 Stainless Steel
20233297	Hex Drive	8.0	16.0	M6	12.0	11.0	316 Stainless Steel
20245429	Hex Drive	8.0	18.0	M6	12.0	11.0	316 Stainless Steel
20233303	Hex Drive	8.0	20.0	M6	12.0	11.0	316 Stainless Steel

Shoulder Screws - Cap Head

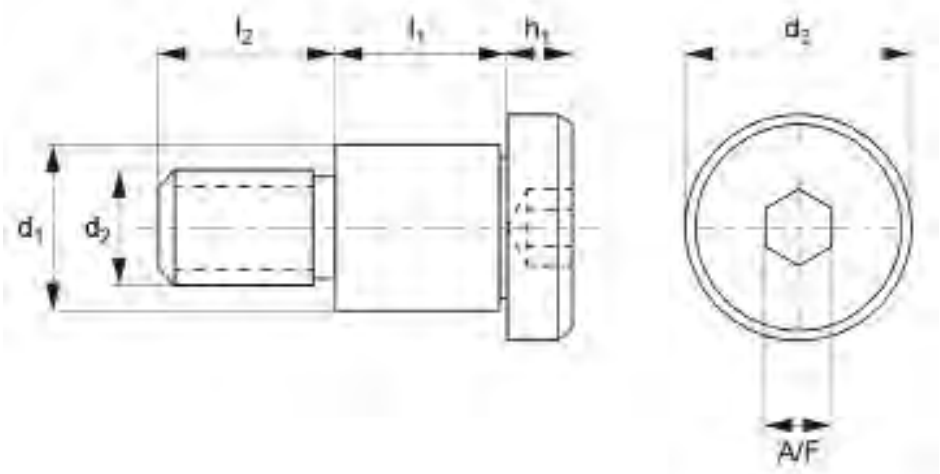



Part Number	Drive Type	d_1+0|-0.025	l_1+0.05|-0.0	d_2	d_3	l_2	Material
20233310	Hex Drive	8.0	25.0	M6	12.0	11.0	316 Stainless Steel
20233327	Hex Drive	8.0	30.0	M6	12.0	11.0	316 Stainless Steel
20245436	Hex Drive	8.0	35.0	M6	12.0	11.0	316 Stainless Steel
20233334	Hex Drive	8.0	40.0	M6	12.0	11.0	316 Stainless Steel
20245443	Hex Drive	8.0	45.0	M6	12.0	11.0	316 Stainless Steel
20233341	Hex Drive	8.0	50.0	M6	12.0	11.0	316 Stainless Steel
20249113	Torx Drive	8.0	4.0	M6	12.0	11.0	316 Stainless Steel
20249120	Torx Drive	8.0	5.0	M6	12.0	11.0	316 Stainless Steel
20234980	Torx Drive	8.0	6.0	M6	12.0	11.0	316 Stainless Steel
20249137	Torx Drive	8.0	7.0	M6	12.0	11.0	316 Stainless Steel
20234997	Torx Drive	8.0	8.0	M6	12.0	11.0	316 Stainless Steel
20235000	Torx Drive	8.0	10.0	M6	12.0	11.0	316 Stainless Steel
20235017	Torx Drive	8.0	12.0	M6	12.0	11.0	316 Stainless Steel
20249144	Torx Drive	8.0	14.0	M6	12.0	11.0	316 Stainless Steel
20235024	Torx Drive	8.0	16.0	M6	12.0	11.0	316 Stainless Steel
20249151	Torx Drive	8.0	18.0	M6	12.0	11.0	316 Stainless Steel
20235031	Torx Drive	8.0	20.0	M6	12.0	11.0	316 Stainless Steel
20235048	Torx Drive	8.0	25.0	M6	12.0	11.0	316 Stainless Steel
20235055	Torx Drive	8.0	30.0	M6	12.0	11.0	316 Stainless Steel
20249168	Torx Drive	8.0	35.0	M6	12.0	11.0	316 Stainless Steel
20235062	Torx Drive	8.0	40.0	M6	12.0	11.0	316 Stainless Steel

Shoulder Screws - Cap Head

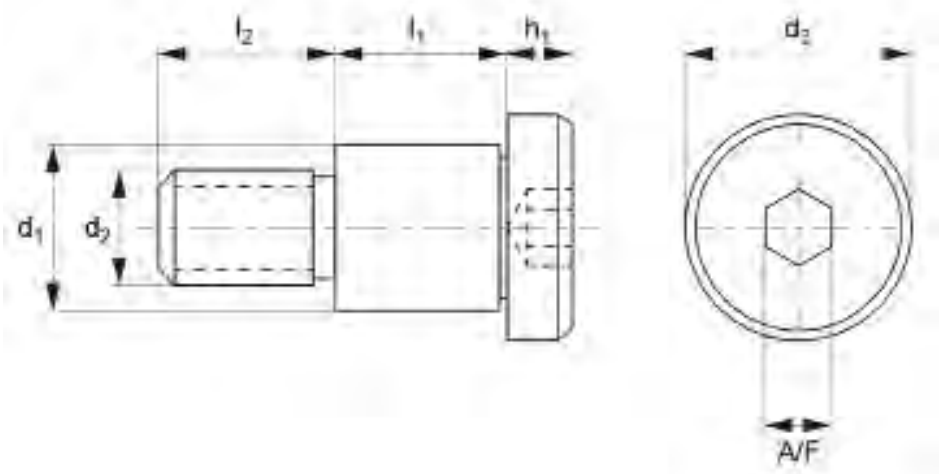



Part Number	Drive Type	d_1+0|-0.025	l_1+0.05|-0.0	d_2	d_3	l_2	Material
20249175	Torx Drive	8.0	45.0	M6	12.0	11.0	316 Stainless Steel
20235079	Torx Drive	8.0	50.0	M6	12.0	11.0	316 Stainless Steel
20249182	Torx Drive	8.0	55.0	M6	12.0	11.0	316 Stainless Steel
20249199	Torx Drive	8.0	60.0	M6	12.0	11.0	316 Stainless Steel
20249205	Torx Drive	8.0	65.0	M6	12.0	11.0	316 Stainless Steel
20249212	Torx Drive	8.0	70.0	M6	12.0	11.0	316 Stainless Steel
20249229	Torx Drive	8.0	75.0	M6	12.0	11.0	316 Stainless Steel
20249236	Torx Drive	8.0	80.0	M6	12.0	11.0	316 Stainless Steel
20249243	Torx Drive	8.0	90.0	M6	12.0	11.0	316 Stainless Steel
20249250	Torx Drive	8.0	100.0	M6	12.0	11.0	316 Stainless Steel
20230944	Hex Drive	8.0	4.0	M6	12.0	11.0	303 Stainless Steel
20230951	Hex Drive	8.0	5.0	M6	12.0	11.0	303 Stainless Steel
20230968	Hex Drive	8.0	6.0	M6	12.0	11.0	303 Stainless Steel
20230975	Hex Drive	8.0	7.0	M6	12.0	11.0	303 Stainless Steel
20230982	Hex Drive	8.0	8.0	M6	12.0	11.0	303 Stainless Steel
20230999	Hex Drive	8.0	10.0	M6	12.0	11.0	303 Stainless Steel
20231002	Hex Drive	8.0	12.0	M6	12.0	11.0	303 Stainless Steel
20231019	Hex Drive	8.0	14.0	M6	12.0	11.0	303 Stainless Steel
20231026	Hex Drive	8.0	16.0	M6	12.0	11.0	303 Stainless Steel
20231033	Hex Drive	8.0	18.0	M6	12.0	11.0	303 Stainless Steel
20231040	Hex Drive	8.0	20.0	M6	12.0	11.0	303 Stainless Steel

Shoulder Screws - Cap Head

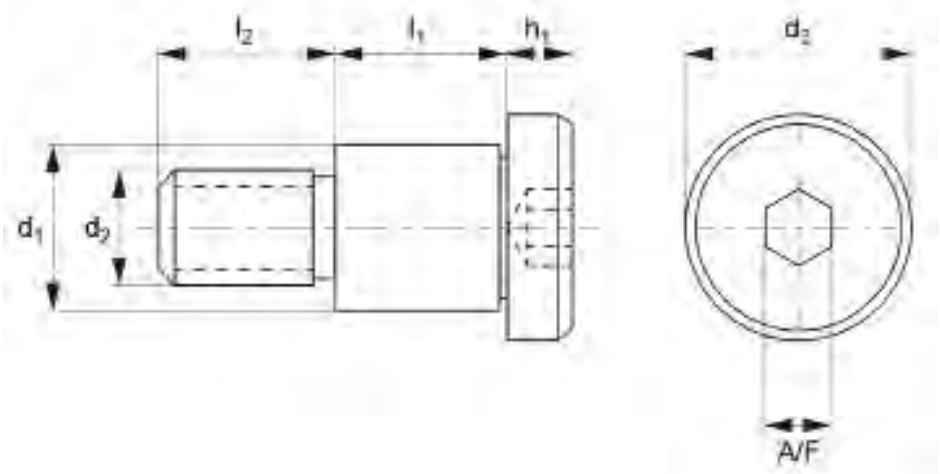



Part Number	Drive Type	d_1+0|-0.025	l_1+0.05|-0.0	d_2	d_3	l_2	Material
20231057	Hex Drive	8.0	25.0	M6	12.0	11.0	303 Stainless Steel
20231064	Hex Drive	8.0	30.0	M6	12.0	11.0	303 Stainless Steel
20231071	Hex Drive	8.0	35.0	M6	12.0	11.0	303 Stainless Steel
20231088	Hex Drive	8.0	40.0	M6	12.0	11.0	303 Stainless Steel
20231095	Hex Drive	8.0	45.0	M6	12.0	11.0	303 Stainless Steel
20231101	Hex Drive	8.0	50.0	M6	12.0	11.0	303 Stainless Steel
20231118	Hex Drive	8.0	55.0	M6	12.0	11.0	303 Stainless Steel
20231125	Hex Drive	8.0	60.0	M6	12.0	11.0	303 Stainless Steel
20231132	Hex Drive	8.0	65.0	M6	12.0	11.0	303 Stainless Steel
20231149	Hex Drive	8.0	70.0	M6	12.0	11.0	303 Stainless Steel
20231156	Hex Drive	8.0	75.0	M6	12.0	11.0	303 Stainless Steel
20231163	Hex Drive	8.0	80.0	M6	12.0	11.0	303 Stainless Steel
20231170	Hex Drive	8.0	90.0	M6	12.0	11.0	303 Stainless Steel
20231187	Hex Drive	8.0	100.0	M6	12.0	11.0	303 Stainless Steel
20232085	Slotted Drive	8.0	6.0	M6	12.0	11.0	303 Stainless Steel
20232092	Slotted Drive	8.0	8.0	M6	12.0	11.0	303 Stainless Steel
20232108	Slotted Drive	8.0	10.0	M6	12.0	11.0	303 Stainless Steel
20232115	Slotted Drive	8.0	12.0	M6	12.0	11.0	303 Stainless Steel
20232122	Slotted Drive	8.0	16.0	M6	12.0	11.0	303 Stainless Steel
20232139	Slotted Drive	8.0	20.0	M6	12.0	11.0	303 Stainless Steel
20248093	Torx Drive	8.0	4.0	M6	12.0	11.0	303 Stainless Steel

Shoulder Screws - Cap Head

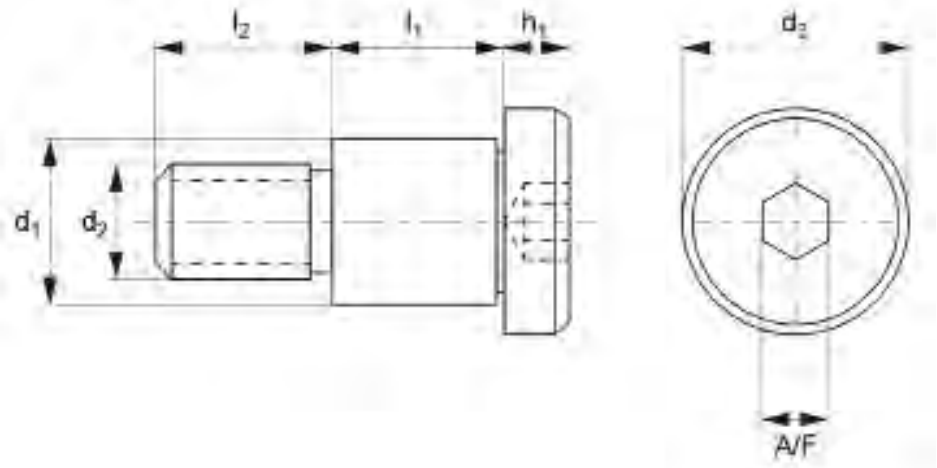



Part Number	Drive Type	d_1+0|-0.025	l_1+0.05|-0.0	d_2	d_3	l_2	Material
20248109	Torx Drive	8.0	5.0	M6	12.0	11.0	303 Stainless Steel
20234447	Torx Drive	8.0	6.0	M6	12.0	11.0	303 Stainless Steel
20248116	Torx Drive	8.0	7.0	M6	12.0	11.0	303 Stainless Steel
20234454	Torx Drive	8.0	8.0	M6	12.0	11.0	303 Stainless Steel
20234461	Torx Drive	8.0	10.0	M6	12.0	11.0	303 Stainless Steel
20234478	Torx Drive	8.0	12.0	M6	12.0	11.0	303 Stainless Steel
20248123	Torx Drive	8.0	14.0	M6	12.0	11.0	303 Stainless Steel
20234485	Torx Drive	8.0	16.0	M6	12.0	11.0	303 Stainless Steel
20248130	Torx Drive	8.0	18.0	M6	12.0	11.0	303 Stainless Steel
20234492	Torx Drive	8.0	20.0	M6	12.0	11.0	303 Stainless Steel
20234508	Torx Drive	8.0	25.0	M6	12.0	11.0	303 Stainless Steel
20234515	Torx Drive	8.0	30.0	M6	12.0	11.0	303 Stainless Steel
20248147	Torx Drive	8.0	35.0	M6	12.0	11.0	303 Stainless Steel
20234522	Torx Drive	8.0	40.0	M6	12.0	11.0	303 Stainless Steel
20248154	Torx Drive	8.0	45.0	M6	12.0	11.0	303 Stainless Steel
20234539	Torx Drive	8.0	50.0	M6	12.0	11.0	303 Stainless Steel
20248161	Torx Drive	8.0	55.0	M6	12.0	11.0	303 Stainless Steel
20248178	Torx Drive	8.0	60.0	M6	12.0	11.0	303 Stainless Steel
20248185	Torx Drive	8.0	65.0	M6	12.0	11.0	303 Stainless Steel
20248192	Torx Drive	8.0	70.0	M6	12.0	11.0	303 Stainless Steel
20248208	Torx Drive	8.0	75.0	M6	12.0	11.0	303 Stainless Steel

Shoulder Screws - Cap Head

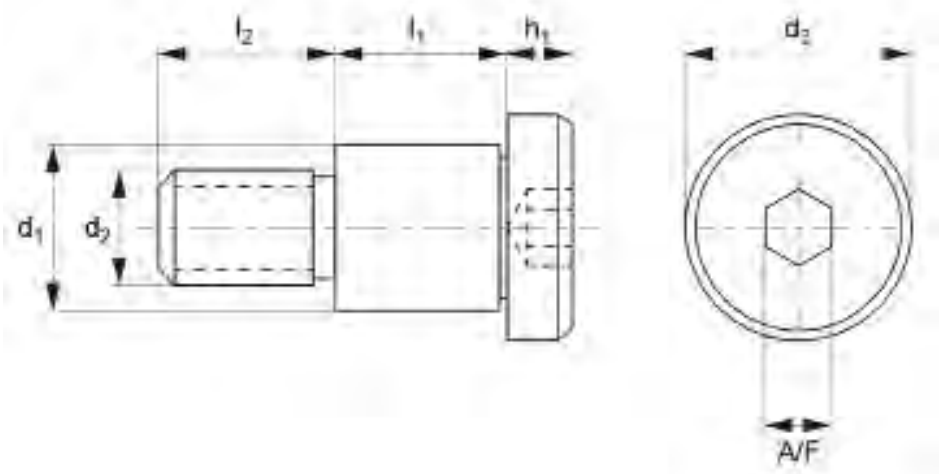



Part Number	Drive Type	d_1+0|-0.025	l_1+0.05|-0.0	d_2	d_3	l_2	Material
20248215	Torx Drive	8.0	80.0	M6	12.0	11.0	303 Stainless Steel
20248222	Torx Drive	8.0	90.0	M6	12.0	11.0	303 Stainless Steel
20248239	Torx Drive	8.0	100.0	M6	12.0	11.0	303 Stainless Steel
20222208	Hex Drive	8.0	6.0	M6	12.0	11.0	416 Stainless Steel
20222215	Hex Drive	8.0	8.0	M6	12.0	11.0	416 Stainless Steel
20222239	Hex Drive	8.0	10.0	M6	12.0	11.0	416 Stainless Steel
20222246	Hex Drive	8.0	12.0	M6	12.0	11.0	416 Stainless Steel
20222253	Hex Drive	8.0	16.0	M6	12.0	11.0	416 Stainless Steel
20222260	Hex Drive	8.0	20.0	M6	12.0	11.0	416 Stainless Steel
20225759	Hex Drive	8.0	25.0	M6	12.0	11.0	416 Stainless Steel
20225766	Hex Drive	8.0	30.0	M6	12.0	11.0	416 Stainless Steel
20228644	Hex Drive	8.0	8.0	M6	12.0	11.0	316 Stainless Steel
20228583	Hex Drive	8.0	10.0	M6	12.0	11.0	316 Stainless Steel
20222802	Hex Drive	8.0	12.0	M6	12.0	11.0	316 Stainless Steel
20245061	Hex Drive	8.0	14.0	M6	12.0	11.0	316 Stainless Steel
20222819	Hex Drive	8.0	16.0	M6	12.0	11.0	316 Stainless Steel
20245078	Hex Drive	8.0	18.0	M6	12.0	11.0	316 Stainless Steel
20222826	Hex Drive	8.0	20.0	M6	12.0	11.0	316 Stainless Steel
20222833	Hex Drive	8.0	25.0	M6	12.0	11.0	316 Stainless Steel
20222840	Hex Drive	8.0	30.0	M6	12.0	11.0	316 Stainless Steel
20245085	Hex Drive	8.0	35.0	M6	12.0	11.0	316 Stainless Steel

Shoulder Screws - Cap Head

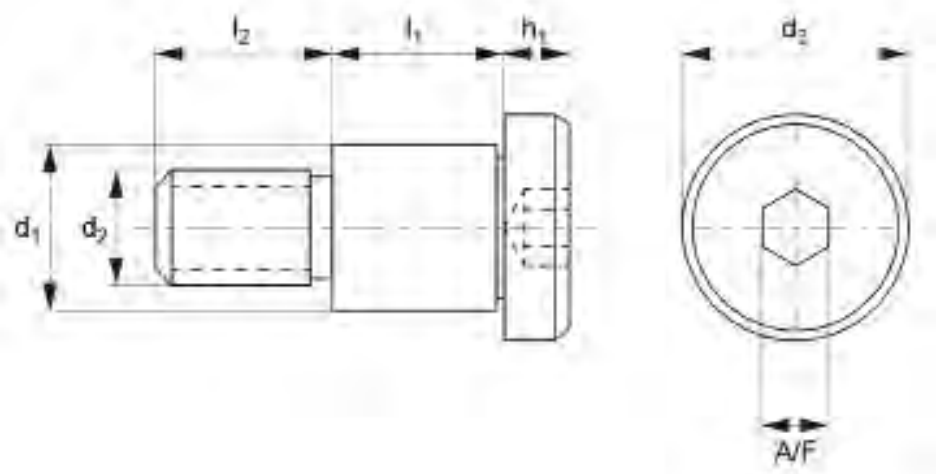



Part Number	Drive Type	d_1+0|-0.025	l_1+0.05|-0.0	d_2	d_3	l_2	Material
20222857	Hex Drive	8.0	40.0	M6	12.0	11.0	316 Stainless Steel
20245092	Hex Drive	8.0	45.0	M6	12.0	11.0	316 Stainless Steel
20222864	Hex Drive	8.0	50.0	M6	12.0	11.0	316 Stainless Steel
20247072	Torx Drive	8.0	4.0	M6	12.0	11.0	316 Stainless Steel
20247089	Torx Drive	8.0	5.0	M6	12.0	11.0	316 Stainless Steel
20233914	Torx Drive	8.0	6.0	M6	12.0	11.0	316 Stainless Steel
20247096	Torx Drive	8.0	7.0	M6	12.0	11.0	316 Stainless Steel
20233921	Torx Drive	8.0	8.0	M6	12.0	11.0	316 Stainless Steel
20233938	Torx Drive	8.0	10.0	M6	12.0	11.0	316 Stainless Steel
20233945	Torx Drive	8.0	12.0	M6	12.0	11.0	316 Stainless Steel
20247102	Torx Drive	8.0	14.0	M6	12.0	11.0	316 Stainless Steel
20233952	Torx Drive	8.0	16.0	M6	12.0	11.0	316 Stainless Steel
20247119	Torx Drive	8.0	18.0	M6	12.0	11.0	316 Stainless Steel
20233969	Torx Drive	8.0	20.0	M6	12.0	11.0	316 Stainless Steel
20233976	Torx Drive	8.0	25.0	M6	12.0	11.0	316 Stainless Steel
20233983	Torx Drive	8.0	30.0	M6	12.0	11.0	316 Stainless Steel
20247126	Torx Drive	8.0	35.0	M6	12.0	11.0	316 Stainless Steel
20233990	Torx Drive	8.0	40.0	M6	12.0	11.0	316 Stainless Steel
20247133	Torx Drive	8.0	45.0	M6	12.0	11.0	316 Stainless Steel
20234003	Torx Drive	8.0	50.0	M6	12.0	11.0	316 Stainless Steel
20247140	Torx Drive	8.0	55.0	M6	12.0	11.0	316 Stainless Steel

Shoulder Screws - Cap Head

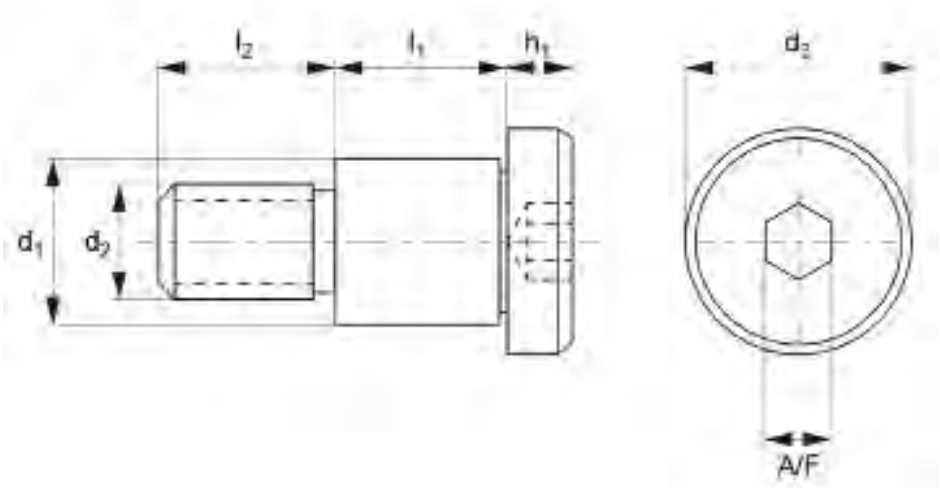



Part Number	Drive Type	d_1+0|-0.025	l_1+0.05|-0.0	d_2	d_3	l_2	Material
20247157	Torx Drive	8.0	60.0	M6	12.0	11.0	316 Stainless Steel
20247164	Torx Drive	8.0	65.0	M6	12.0	11.0	316 Stainless Steel
20247171	Torx Drive	8.0	70.0	M6	12.0	11.0	316 Stainless Steel
20247188	Torx Drive	8.0	75.0	M6	12.0	11.0	316 Stainless Steel
20247195	Torx Drive	8.0	80.0	M6	12.0	11.0	316 Stainless Steel
20247201	Torx Drive	8.0	90.0	M6	12.0	11.0	316 Stainless Steel
20247218	Torx Drive	8.0	100.0	M6	12.0	11.0	316 Stainless Steel
20221577	Slotted Drive	8.0	6.0	M6	12.0	11.0	303 Stainless Steel
20221591	Slotted Drive	8.0	8.0	M6	12.0	11.0	303 Stainless Steel
20221638	Slotted Drive	8.0	10.0	M6	12.0	11.0	303 Stainless Steel
20221652	Slotted Drive	8.0	12.0	M6	12.0	11.0	303 Stainless Steel
20221676	Slotted Drive	8.0	16.0	M6	12.0	11.0	303 Stainless Steel
20246051	Torx Drive	8.0	4.0	M6	12.0	11.0	303 Stainless Steel
20246068	Torx Drive	8.0	5.0	M6	12.0	11.0	303 Stainless Steel
20228569	Torx Drive	8.0	6.0	M6	12.0	11.0	303 Stainless Steel
20246075	Torx Drive	8.0	7.0	M6	12.0	11.0	303 Stainless Steel
20241322	Torx Drive	8.0	8.0	M6	12.0	11.0	303 Stainless Steel
20228507	Torx Drive	8.0	10.0	M6	12.0	11.0	303 Stainless Steel
20225223	Torx Drive	8.0	12.0	M6	12.0	11.0	303 Stainless Steel
20246082	Torx Drive	8.0	14.0	M6	12.0	11.0	303 Stainless Steel
20225230	Torx Drive	8.0	16.0	M6	12.0	11.0	303 Stainless Steel

Shoulder Screws - Cap Head

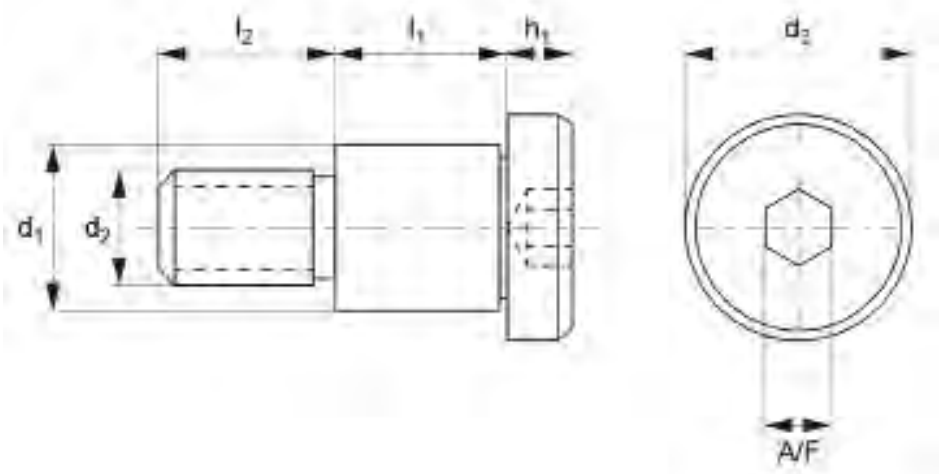



Part Number	Drive Type	d_1+0|-0.025	l_1+0.05|-0.0	d_2	d_3	l_2	Material
20246099	Torx Drive	8.0	18.0	M6	12.0	11.0	303 Stainless Steel
20225247	Torx Drive	8.0	20.0	M6	12.0	11.0	303 Stainless Steel
20225254	Torx Drive	8.0	25.0	M6	12.0	11.0	303 Stainless Steel
20225261	Torx Drive	8.0	30.0	M6	12.0	11.0	303 Stainless Steel
20246105	Torx Drive	8.0	35.0	M6	12.0	11.0	303 Stainless Steel
20225278	Torx Drive	8.0	40.0	M6	12.0	11.0	303 Stainless Steel
20246112	Torx Drive	8.0	45.0	M6	12.0	11.0	303 Stainless Steel
20225285	Torx Drive	8.0	50.0	M6	12.0	11.0	303 Stainless Steel
20246129	Torx Drive	8.0	55.0	M6	12.0	11.0	303 Stainless Steel
20246136	Torx Drive	8.0	60.0	M6	12.0	11.0	303 Stainless Steel
20246143	Torx Drive	8.0	65.0	M6	12.0	11.0	303 Stainless Steel
20246150	Torx Drive	8.0	70.0	M6	12.0	11.0	303 Stainless Steel
20246167	Torx Drive	8.0	75.0	M6	12.0	11.0	303 Stainless Steel
20246174	Torx Drive	8.0	80.0	M6	12.0	11.0	303 Stainless Steel
20246181	Torx Drive	8.0	90.0	M6	12.0	11.0	303 Stainless Steel
20246198	Torx Drive	8.0	100.0	M6	12.0	11.0	303 Stainless Steel
20142308	Hex Drive	10.0	8.0	M6	14.0	11.0	303 Stainless Steel
20142315	Hex Drive	10.0	10.0	M6	14.0	11.0	303 Stainless Steel
20142322	Hex Drive	10.0	12.0	M6	14.0	11.0	303 Stainless Steel
20142339	Hex Drive	10.0	16.0	M6	14.0	11.0	303 Stainless Steel
20142346	Hex Drive	10.0	8.0	M8	14.0	12.0	303 Stainless Steel

Shoulder Screws - Cap Head

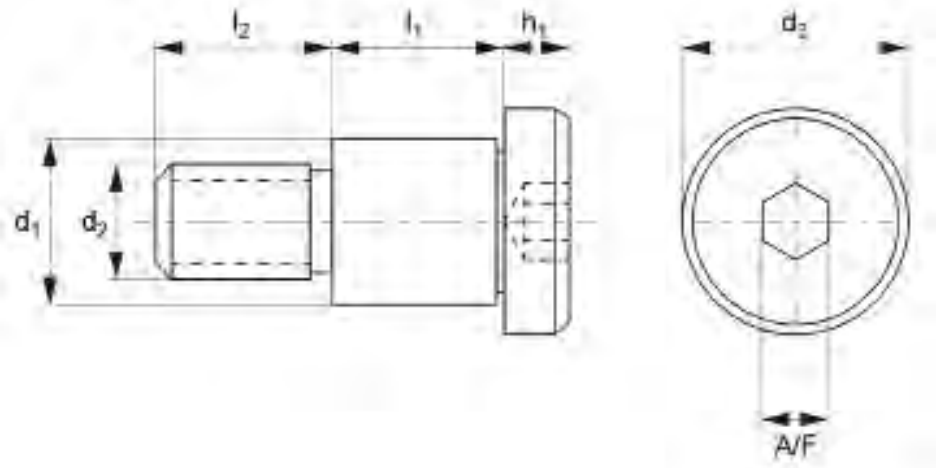



Part Number	Drive Type	d_1+0|-0.025	l_1+0.05|-0.0	d_2	d_3	l_2	Material
20142353	Hex Drive	10.0	10.0	M8	14.0	12.0	303 Stainless Steel
20142377	Hex Drive	10.0	12.0	M8	14.0	12.0	303 Stainless Steel
20142384	Hex Drive	10.0	16.0	M8	14.0	12.0	303 Stainless Steel
20142889	Hex Drive	10.0	20.0	M8	14.0	12.0	303 Stainless Steel
20142896	Hex Drive	10.0	25.0	M8	14.0	12.0	303 Stainless Steel
20142902	Hex Drive	10.0	30.0	M8	14.0	12.0	303 Stainless Steel
20144258	Hex Drive	10.0	14.0	M8	14.0	12.0	303 Stainless Steel
20144265	Hex Drive	10.0	18.0	M8	14.0	12.0	303 Stainless Steel
20144272	Hex Drive	10.0	35.0	M8	14.0	12.0	303 Stainless Steel
20144289	Hex Drive	10.0	40.0	M8	14.0	12.0	303 Stainless Steel
20144296	Hex Drive	10.0	45.0	M8	14.0	12.0	303 Stainless Steel
20144302	Hex Drive	10.0	50.0	M8	14.0	12.0	303 Stainless Steel
20144661	Hex Drive	10.0	55.0	M8	14.0	12.0	303 Stainless Steel
20144678	Hex Drive	10.0	60.0	M8	14.0	12.0	303 Stainless Steel
20144685	Hex Drive	10.0	65.0	M8	14.0	12.0	303 Stainless Steel
20144692	Hex Drive	10.0	70.0	M8	14.0	12.0	303 Stainless Steel
20144708	Hex Drive	10.0	80.0	M8	14.0	12.0	303 Stainless Steel
20144715	Hex Drive	10.0	90.0	M8	14.0	12.0	303 Stainless Steel
20144722	Hex Drive	10.0	100.0	M8	14.0	12.0	303 Stainless Steel
20249939	Hex Drive	10.0	8.0	M8	14.0	12.0	Titanium G5
20249946	Hex Drive	10.0	10.0	M8	14.0	12.0	Titanium G5

Shoulder Screws - Cap Head

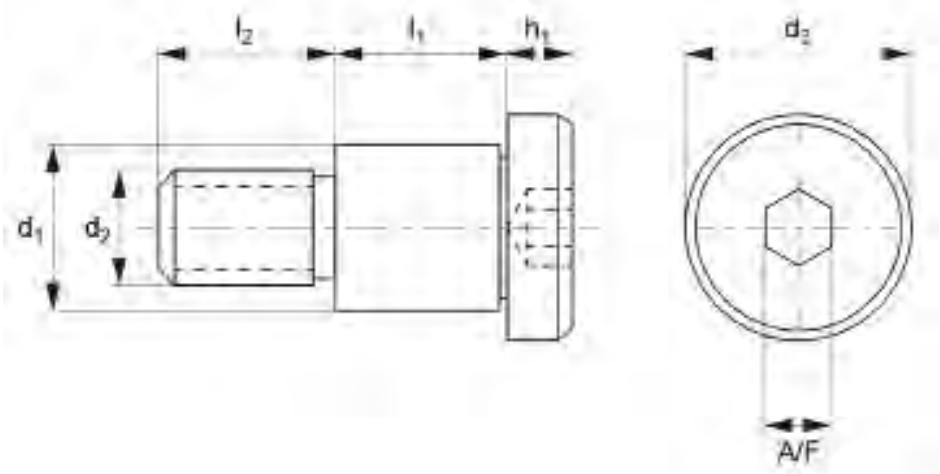



Part Number	Drive Type	d_1+0|-0.025	l_1+0.05|-0.0	d_2	d_3	l_2	Material
20249953	Hex Drive	10.0	12.0	M8	14.0	12.0	Titanium G5
20249960	Hex Drive	10.0	14.0	M8	14.0	12.0	Titanium G5
20249977	Hex Drive	10.0	16.0	M8	14.0	12.0	Titanium G5
20249984	Hex Drive	10.0	18.0	M8	14.0	12.0	Titanium G5
20249991	Hex Drive	10.0	20.0	M8	14.0	12.0	Titanium G5
20250003	Hex Drive	10.0	25.0	M8	14.0	12.0	Titanium G5
20250010	Hex Drive	10.0	30.0	M8	14.0	12.0	Titanium G5
20250027	Hex Drive	10.0	35.0	M8	14.0	12.0	Titanium G5
20250034	Hex Drive	10.0	40.0	M8	14.0	12.0	Titanium G5
20250041	Hex Drive	10.0	45.0	M8	14.0	12.0	Titanium G5
20250058	Hex Drive	10.0	50.0	M8	14.0	12.0	Titanium G5
20250065	Hex Drive	10.0	55.0	M8	14.0	12.0	Titanium G5
20250072	Hex Drive	10.0	60.0	M8	14.0	12.0	Titanium G5
20250089	Hex Drive	10.0	65.0	M8	14.0	12.0	Titanium G5
20250096	Hex Drive	10.0	70.0	M8	14.0	12.0	Titanium G5
20250102	Hex Drive	10.0	80.0	M8	14.0	12.0	Titanium G5
20250119	Hex Drive	10.0	90.0	M8	14.0	12.0	Titanium G5
20250126	Hex Drive	10.0	100.0	M8	14.0	12.0	Titanium G5
20249731	Hex Drive	10.0	8.0	M8	14.0	12.0	Titanium G2
20249748	Hex Drive	10.0	10.0	M8	14.0	12.0	Titanium G2
20249755	Hex Drive	10.0	12.0	M8	14.0	12.0	Titanium G2

Shoulder Screws - Cap Head

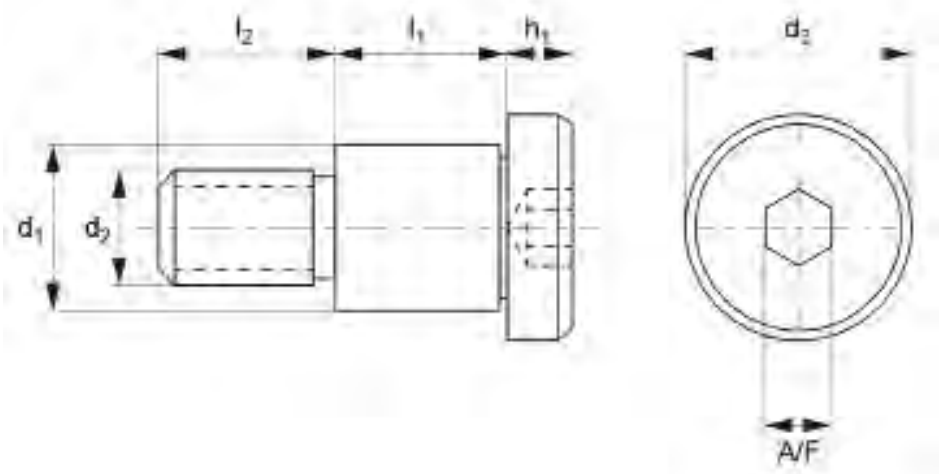



Part Number	Drive Type	d_1+0|-0.025	l_1+0.05|-0.0	d_2	d_3	l_2	Material
20249762	Hex Drive	10.0	14.0	M8	14.0	12.0	Titanium G2
20249779	Hex Drive	10.0	16.0	M8	14.0	12.0	Titanium G2
20249786	Hex Drive	10.0	18.0	M8	14.0	12.0	Titanium G2
20249793	Hex Drive	10.0	20.0	M8	14.0	12.0	Titanium G2
20249809	Hex Drive	10.0	25.0	M8	14.0	12.0	Titanium G2
20249816	Hex Drive	10.0	30.0	M8	14.0	12.0	Titanium G2
20249823	Hex Drive	10.0	35.0	M8	14.0	12.0	Titanium G2
20249830	Hex Drive	10.0	40.0	M8	14.0	12.0	Titanium G2
20249847	Hex Drive	10.0	45.0	M8	14.0	12.0	Titanium G2
20249854	Hex Drive	10.0	50.0	M8	14.0	12.0	Titanium G2
20249861	Hex Drive	10.0	55.0	M8	14.0	12.0	Titanium G2
20249878	Hex Drive	10.0	60.0	M8	14.0	12.0	Titanium G2
20249885	Hex Drive	10.0	65.0	M8	14.0	12.0	Titanium G2
20249892	Hex Drive	10.0	70.0	M8	14.0	12.0	Titanium G2
20249908	Hex Drive	10.0	80.0	M8	14.0	12.0	Titanium G2
20249915	Hex Drive	10.0	90.0	M8	14.0	12.0	Titanium G2
20249922	Hex Drive	10.0	100.0	M8	14.0	12.0	Titanium G2
20222314	Hex Drive	10.0	8.0	M8	14.0	12.0	416 Stainless Steel
20222321	Hex Drive	10.0	10.0	M8	14.0	12.0	416 Stainless Steel
20245641	Hex Drive	10.0	12.0	M8	14.0	12.0	416 Stainless Steel
20222352	Hex Drive	10.0	16.0	M8	14.0	12.0	416 Stainless Steel

Shoulder Screws - Cap Head

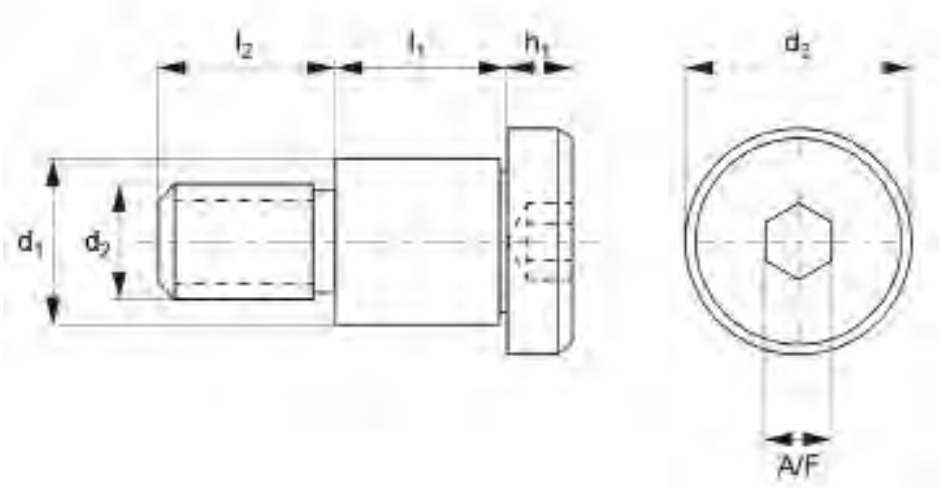



Part Number	Drive Type	d_1+0|-0.025	l_1+0.05|-0.0	d_2	d_3	l_2	Material
20221768	Slotted Drive	10.0	8.0	M8	14.0	12.0	416 Stainless Steel
20228347	Slotted Drive	10.0	10.0	M8	14.0	12.0	416 Stainless Steel
20221812	Slotted Drive	10.0	12.0	M8	14.0	12.0	416 Stainless Steel
20221836	Slotted Drive	10.0	16.0	M8	14.0	12.0	416 Stainless Steel
20222277	Hex Drive	10.0	8.0	M6	14.0	11.0	416 Stainless Steel
20222284	Hex Drive	10.0	10.0	M6	14.0	11.0	416 Stainless Steel
20222291	Hex Drive	10.0	12.0	M6	14.0	11.0	416 Stainless Steel
20222307	Hex Drive	10.0	16.0	M6	14.0	11.0	416 Stainless Steel
20221706	Slotted Drive	10.0	8.0	M6	14.0	11.0	416 Stainless Steel
20221737	Slotted Drive	10.0	12.0	M6	14.0	11.0	416 Stainless Steel
20235772	Hex Drive	10.0	8.0	M8	14.0	12.0	303 Stainless Steel
20235789	Hex Drive	10.0	10.0	M8	14.0	12.0	303 Stainless Steel
20235796	Hex Drive	10.0	12.0	M8	14.0	12.0	303 Stainless Steel
20235802	Hex Drive	10.0	14.0	M8	14.0	12.0	303 Stainless Steel
20235819	Hex Drive	10.0	16.0	M8	14.0	12.0	303 Stainless Steel
20235826	Hex Drive	10.0	18.0	M8	14.0	12.0	303 Stainless Steel
20235833	Hex Drive	10.0	20.0	M8	14.0	12.0	303 Stainless Steel
20235840	Hex Drive	10.0	25.0	M8	14.0	12.0	303 Stainless Steel
20235857	Hex Drive	10.0	30.0	M8	14.0	12.0	303 Stainless Steel
20235864	Hex Drive	10.0	35.0	M8	14.0	12.0	303 Stainless Steel
20235871	Hex Drive	10.0	40.0	M8	14.0	12.0	303 Stainless Steel

Shoulder Screws - Cap Head

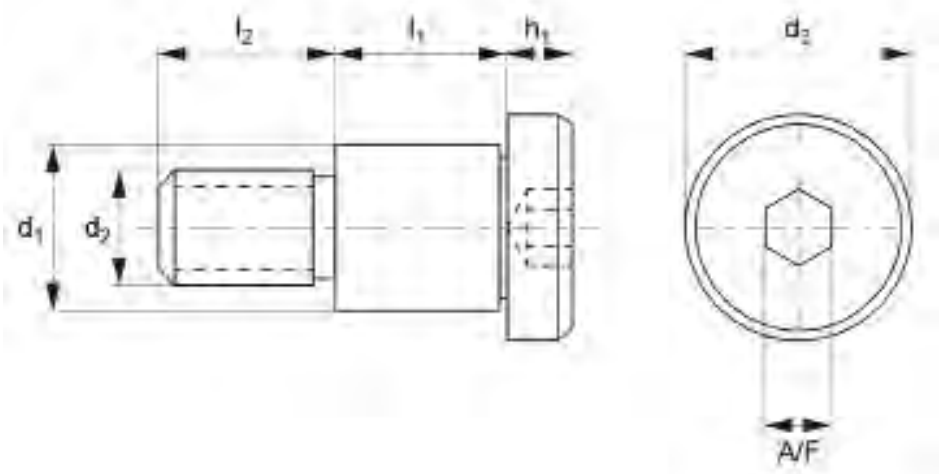



Part Number	Drive Type	d_1+0|-0.025	l_1+0.05|-0.0	d_2	d_3	l_2	Material
20235888	Hex Drive	10.0	45.0	M8	14.0	12.0	303 Stainless Steel
20235895	Hex Drive	10.0	50.0	M8	14.0	12.0	303 Stainless Steel
20235901	Hex Drive	10.0	55.0	M8	14.0	12.0	303 Stainless Steel
20235918	Hex Drive	10.0	60.0	M8	14.0	12.0	303 Stainless Steel
20235925	Hex Drive	10.0	65.0	M8	14.0	12.0	303 Stainless Steel
20235932	Hex Drive	10.0	70.0	M8	14.0	12.0	303 Stainless Steel
20235949	Hex Drive	10.0	80.0	M8	14.0	12.0	303 Stainless Steel
20235956	Hex Drive	10.0	90.0	M8	14.0	12.0	303 Stainless Steel
20235963	Hex Drive	10.0	100.0	M8	14.0	12.0	303 Stainless Steel
20235741	Hex Drive	10.0	8.0	M6	14.0	11.0	303 Stainless Steel
20235758	Hex Drive	10.0	10.0	M6	14.0	11.0	303 Stainless Steel
20230111	Hex Drive	10.0	12.0	M6	14.0	11.0	303 Stainless Steel
20235765	Hex Drive	10.0	16.0	M6	14.0	11.0	303 Stainless Steel
20233358	Hex Drive	10.0	8.0	M8	14.0	12.0	316 Stainless Steel
20233365	Hex Drive	10.0	10.0	M8	14.0	12.0	316 Stainless Steel
20233372	Hex Drive	10.0	12.0	M8	14.0	12.0	316 Stainless Steel
20245450	Hex Drive	10.0	14.0	M8	14.0	12.0	316 Stainless Steel
20233389	Hex Drive	10.0	16.0	M8	14.0	12.0	316 Stainless Steel
20233396	Hex Drive	10.0	20.0	M8	14.0	12.0	316 Stainless Steel
20233402	Hex Drive	10.0	25.0	M8	14.0	12.0	316 Stainless Steel
20233419	Hex Drive	10.0	30.0	M8	14.0	12.0	316 Stainless Steel

Shoulder Screws - Cap Head

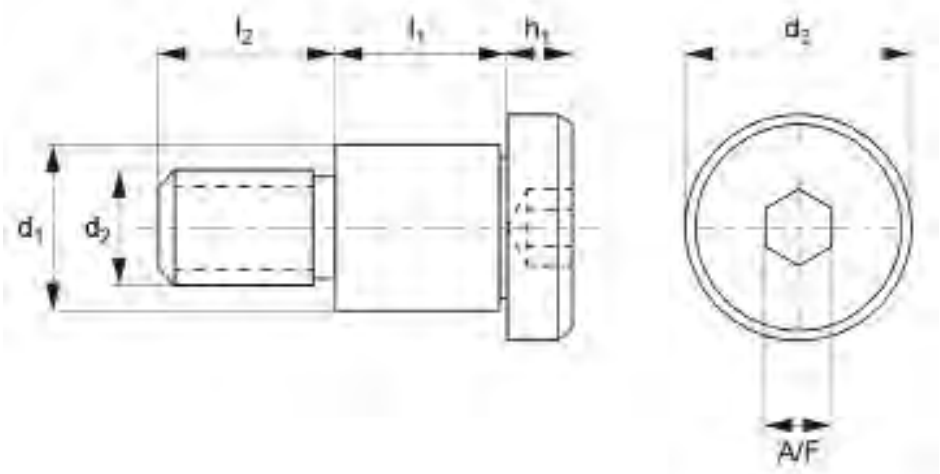



Part Number	Drive Type	d_1+0|-0.025	l_1+0.05|-0.0	d_2	d_3	l_2	Material
20245467	Hex Drive	10.0	35.0	M8	14.0	12.0	316 Stainless Steel
20233426	Hex Drive	10.0	40.0	M8	14.0	12.0	316 Stainless Steel
20245474	Hex Drive	10.0	45.0	M8	14.0	12.0	316 Stainless Steel
20233433	Hex Drive	10.0	50.0	M8	14.0	12.0	316 Stainless Steel
20245481	Hex Drive	10.0	55.0	M8	14.0	12.0	316 Stainless Steel
20233440	Hex Drive	10.0	60.0	M8	14.0	12.0	316 Stainless Steel
20245498	Hex Drive	10.0	65.0	M8	14.0	12.0	316 Stainless Steel
20233457	Hex Drive	10.0	70.0	M8	14.0	12.0	316 Stainless Steel
20235086	Torx Drive	10.0	8.0	M8	14.0	12.0	316 Stainless Steel
20235093	Torx Drive	10.0	10.0	M8	14.0	12.0	316 Stainless Steel
20235109	Torx Drive	10.0	12.0	M8	14.0	12.0	316 Stainless Steel
20249267	Torx Drive	10.0	14.0	M8	14.0	12.0	316 Stainless Steel
20235116	Torx Drive	10.0	16.0	M8	14.0	12.0	316 Stainless Steel
20249274	Torx Drive	10.0	18.0	M8	14.0	12.0	316 Stainless Steel
20235123	Torx Drive	10.0	20.0	M8	14.0	12.0	316 Stainless Steel
20235130	Torx Drive	10.0	25.0	M8	14.0	12.0	316 Stainless Steel
20235147	Torx Drive	10.0	30.0	M8	14.0	12.0	316 Stainless Steel
20249281	Torx Drive	10.0	35.0	M8	14.0	12.0	316 Stainless Steel
20235154	Torx Drive	10.0	40.0	M8	14.0	12.0	316 Stainless Steel
20249298	Torx Drive	10.0	45.0	M8	14.0	12.0	316 Stainless Steel
20235161	Torx Drive	10.0	50.0	M8	14.0	12.0	316 Stainless Steel

Shoulder Screws - Cap Head

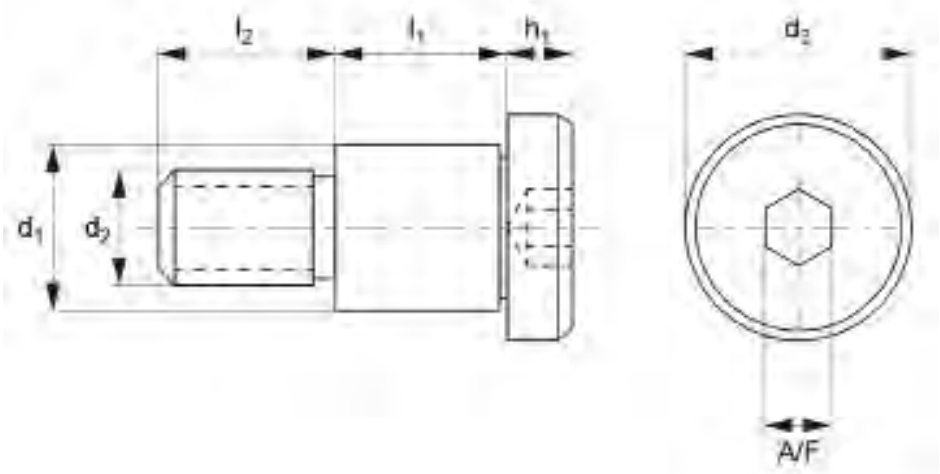



Part Number	Drive Type	d_1+0|-0.025	l_1+0.05|-0.0	d_2	d_3	l_2	Material
20249304	Torx Drive	10.0	55.0	M8	14.0	12.0	316 Stainless Steel
20235178	Torx Drive	10.0	60.0	M8	14.0	12.0	316 Stainless Steel
20249311	Torx Drive	10.0	65.0	M8	14.0	12.0	316 Stainless Steel
20235185	Torx Drive	10.0	70.0	M8	14.0	12.0	316 Stainless Steel
20249328	Torx Drive	10.0	80.0	M8	14.0	12.0	316 Stainless Steel
20249335	Torx Drive	10.0	90.0	M8	14.0	12.0	316 Stainless Steel
20249342	Torx Drive	10.0	100.0	M8	14.0	12.0	316 Stainless Steel
20232146	Slotted Drive	10.0	8.0	M6	14.0	11.0	303 Stainless Steel
20232153	Slotted Drive	10.0	12.0	M6	14.0	11.0	303 Stainless Steel
20232160	Slotted Drive	10.0	8.0	M8	14.0	12.0	303 Stainless Steel
20232177	Slotted Drive	10.0	10.0	M8	14.0	12.0	303 Stainless Steel
20232184	Slotted Drive	10.0	12.0	M8	14.0	12.0	303 Stainless Steel
20232191	Slotted Drive	10.0	16.0	M8	14.0	12.0	303 Stainless Steel
20234546	Torx Drive	10.0	8.0	M8	14.0	12.0	303 Stainless Steel
20234553	Torx Drive	10.0	10.0	M8	14.0	12.0	303 Stainless Steel
20234560	Torx Drive	10.0	12.0	M8	14.0	12.0	303 Stainless Steel
20248246	Torx Drive	10.0	14.0	M8	14.0	12.0	303 Stainless Steel
20234577	Torx Drive	10.0	16.0	M8	14.0	12.0	303 Stainless Steel
20248253	Torx Drive	10.0	18.0	M8	14.0	12.0	303 Stainless Steel
20234584	Torx Drive	10.0	20.0	M8	14.0	12.0	303 Stainless Steel
20234591	Torx Drive	10.0	25.0	M8	14.0	12.0	303 Stainless Steel

Shoulder Screws - Cap Head

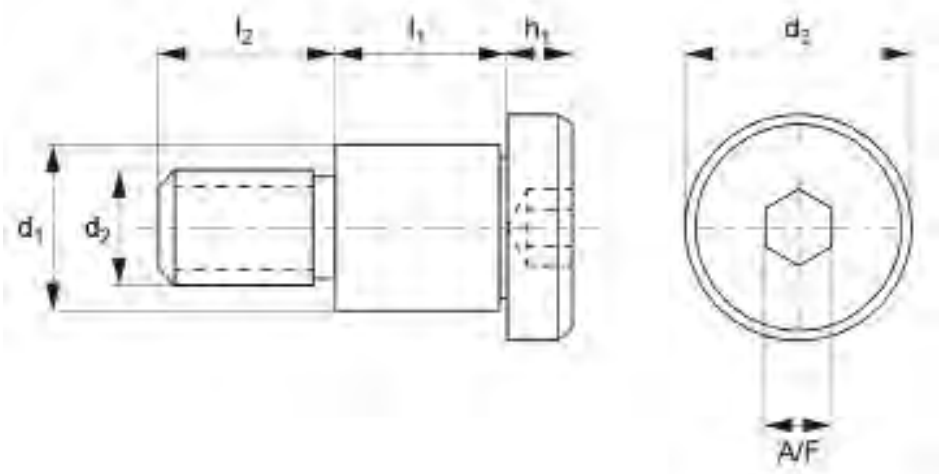



Part Number	Drive Type	d_1+0|-0.025	l_1+0.05|-0.0	d_2	d_3	l_2	Material
20234607	Torx Drive	10.0	30.0	M8	14.0	12.0	303 Stainless Steel
20248260	Torx Drive	10.0	35.0	M8	14.0	12.0	303 Stainless Steel
20234614	Torx Drive	10.0	40.0	M8	14.0	12.0	303 Stainless Steel
20248277	Torx Drive	10.0	45.0	M8	14.0	12.0	303 Stainless Steel
20234621	Torx Drive	10.0	50.0	M8	14.0	12.0	303 Stainless Steel
20248284	Torx Drive	10.0	55.0	M8	14.0	12.0	303 Stainless Steel
20234638	Torx Drive	10.0	60.0	M8	14.0	12.0	303 Stainless Steel
20248291	Torx Drive	10.0	65.0	M8	14.0	12.0	303 Stainless Steel
20234645	Torx Drive	10.0	70.0	M8	14.0	12.0	303 Stainless Steel
20248307	Torx Drive	10.0	80.0	M8	14.0	12.0	303 Stainless Steel
20248314	Torx Drive	10.0	90.0	M8	14.0	12.0	303 Stainless Steel
20248321	Torx Drive	10.0	100.0	M8	14.0	12.0	303 Stainless Steel
20244842	Hex Drive	10.0	8.0	M8	14.0	12.0	316 Stainless Steel
20244859	Hex Drive	10.0	10.0	M8	14.0	12.0	316 Stainless Steel
20244866	Hex Drive	10.0	12.0	M8	14.0	12.0	316 Stainless Steel
20245108	Hex Drive	10.0	14.0	M8	14.0	12.0	316 Stainless Steel
20222871	Hex Drive	10.0	16.0	M8	14.0	12.0	316 Stainless Steel
20222888	Hex Drive	10.0	20.0	M8	14.0	12.0	316 Stainless Steel
20222895	Hex Drive	10.0	25.0	M8	14.0	12.0	316 Stainless Steel
20222901	Hex Drive	10.0	30.0	M8	14.0	12.0	316 Stainless Steel
20245115	Hex Drive	10.0	35.0	M8	14.0	12.0	316 Stainless Steel

Shoulder Screws - Cap Head

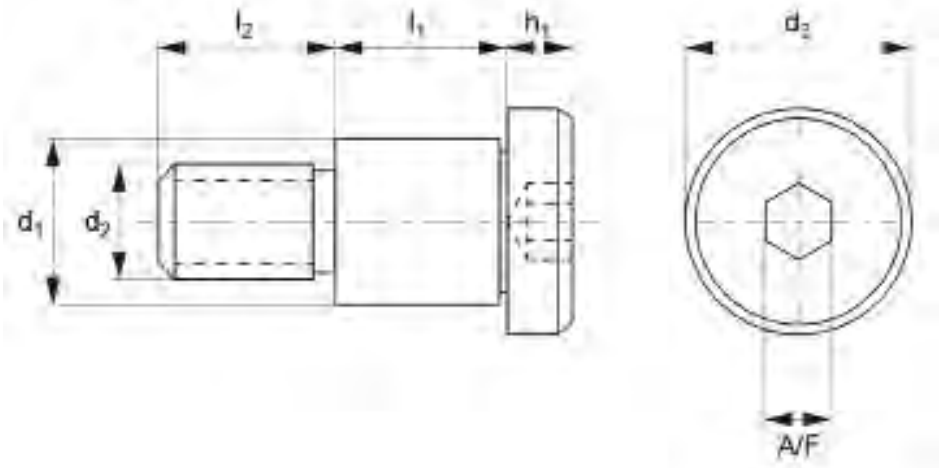



Part Number	Drive Type	d_1+0|-0.025	l_1+0.05|-0.0	d_2	d_3	l_2	Material
20222918	Hex Drive	10.0	40.0	M8	14.0	12.0	316 Stainless Steel
20245122	Hex Drive	10.0	45.0	M8	14.0	12.0	316 Stainless Steel
20222925	Hex Drive	10.0	50.0	M8	14.0	12.0	316 Stainless Steel
20245139	Hex Drive	10.0	55.0	M8	14.0	12.0	316 Stainless Steel
20222932	Hex Drive	10.0	60.0	M8	14.0	12.0	316 Stainless Steel
20245146	Hex Drive	10.0	65.0	M8	14.0	12.0	316 Stainless Steel
20222949	Hex Drive	10.0	70.0	M8	14.0	12.0	316 Stainless Steel
20234010	Torx Drive	10.0	8.0	M8	14.0	12.0	316 Stainless Steel
20234027	Torx Drive	10.0	10.0	M8	14.0	12.0	316 Stainless Steel
20234034	Torx Drive	10.0	12.0	M8	14.0	12.0	316 Stainless Steel
20247225	Torx Drive	10.0	14.0	M8	14.0	12.0	316 Stainless Steel
20234041	Torx Drive	10.0	16.0	M8	14.0	12.0	316 Stainless Steel
20247232	Torx Drive	10.0	18.0	M8	14.0	12.0	316 Stainless Steel
20234058	Torx Drive	10.0	20.0	M8	14.0	12.0	316 Stainless Steel
20234065	Torx Drive	10.0	25.0	M8	14.0	12.0	316 Stainless Steel
20234072	Torx Drive	10.0	30.0	M8	14.0	12.0	316 Stainless Steel
20247249	Torx Drive	10.0	35.0	M8	14.0	12.0	316 Stainless Steel
20234089	Torx Drive	10.0	40.0	M8	14.0	12.0	316 Stainless Steel
20247256	Torx Drive	10.0	45.0	M8	14.0	12.0	316 Stainless Steel
20234096	Torx Drive	10.0	50.0	M8	14.0	12.0	316 Stainless Steel
20247263	Torx Drive	10.0	55.0	M8	14.0	12.0	316 Stainless Steel

Shoulder Screws - Cap Head

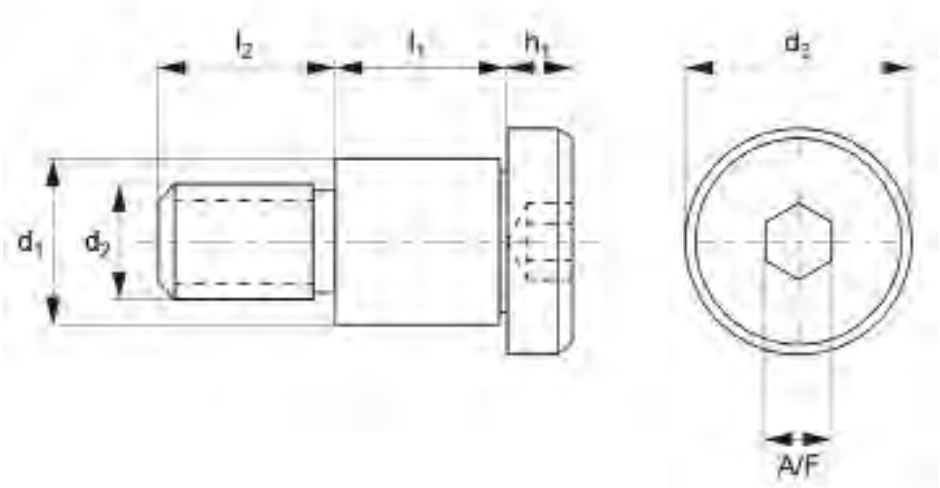



Part Number	Drive Type	d_1+0|-0.025	l_1+0.05|-0.0	d_2	d_3	l_2	Material
20227630	Torx Drive	10.0	60.0	M8	14.0	12.0	316 Stainless Steel
20247270	Torx Drive	10.0	65.0	M8	14.0	12.0	316 Stainless Steel
20234102	Torx Drive	10.0	70.0	M8	14.0	12.0	316 Stainless Steel
20247287	Torx Drive	10.0	80.0	M8	14.0	12.0	316 Stainless Steel
20247294	Torx Drive	10.0	90.0	M8	14.0	12.0	316 Stainless Steel
20247300	Torx Drive	10.0	100.0	M8	14.0	12.0	316 Stainless Steel
20229047	Torx Drive	10.0	8.0	M8	14.0	12.0	303 Stainless Steel
20229900	Torx Drive	10.0	10.0	M8	14.0	12.0	303 Stainless Steel
20241339	Torx Drive	10.0	12.0	M8	14.0	12.0	303 Stainless Steel
20246204	Torx Drive	10.0	14.0	M8	14.0	12.0	303 Stainless Steel
20225292	Torx Drive	10.0	16.0	M8	14.0	12.0	303 Stainless Steel
20246211	Torx Drive	10.0	18.0	M8	14.0	12.0	303 Stainless Steel
20225308	Torx Drive	10.0	20.0	M8	14.0	12.0	303 Stainless Steel
20225315	Torx Drive	10.0	25.0	M8	14.0	12.0	303 Stainless Steel
20225322	Torx Drive	10.0	30.0	M8	14.0	12.0	303 Stainless Steel
20246228	Torx Drive	10.0	35.0	M8	14.0	12.0	303 Stainless Steel
20225339	Torx Drive	10.0	40.0	M8	14.0	12.0	303 Stainless Steel
20246235	Torx Drive	10.0	45.0	M8	14.0	12.0	303 Stainless Steel
20225346	Torx Drive	10.0	50.0	M8	14.0	12.0	303 Stainless Steel
20246242	Torx Drive	10.0	55.0	M8	14.0	12.0	303 Stainless Steel
20225353	Torx Drive	10.0	60.0	M8	14.0	12.0	303 Stainless Steel

Shoulder Screws - Cap Head

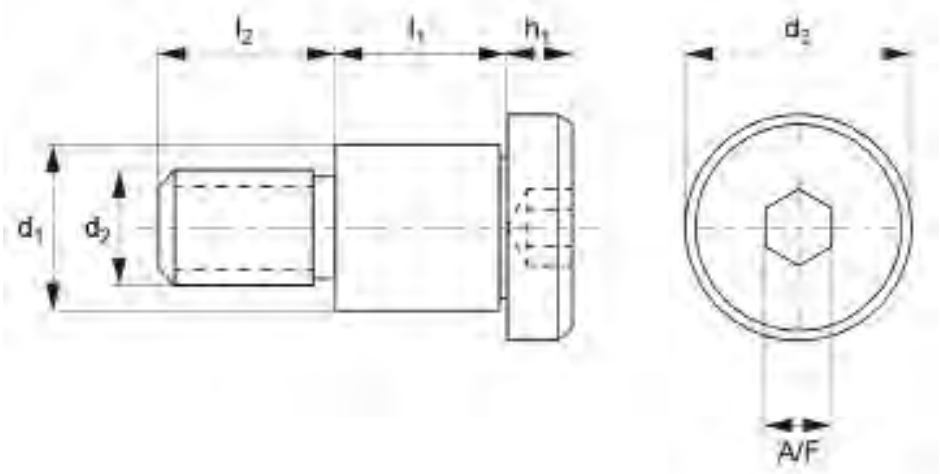



Part Number	Drive Type	d_1+0|-0.025	l_1+0.05|-0.0	d_2	d_3	l_2	Material
20246259	Torx Drive	10.0	65.0	M8	14.0	12.0	303 Stainless Steel
20225360	Torx Drive	10.0	70.0	M8	14.0	12.0	303 Stainless Steel
20246266	Torx Drive	10.0	80.0	M8	14.0	12.0	303 Stainless Steel
20246273	Torx Drive	10.0	90.0	M8	14.0	12.0	303 Stainless Steel
20246280	Torx Drive	10.0	100.0	M8	14.0	12.0	303 Stainless Steel
20141899	Hex Drive	12.0	100.0	M10	20.0	16.0	303 Stainless Steel
20141905	Hex Drive	12.0	60.0	M10	20.0	16.0	303 Stainless Steel
20141912	Hex Drive	12.0	70.0	M10	20.0	16.0	303 Stainless Steel
20141929	Hex Drive	12.0	80.0	M10	20.0	16.0	303 Stainless Steel
20141936	Hex Drive	12.0	90.0	M10	20.0	16.0	303 Stainless Steel
20142391	Hex Drive	12.0	12.0	M10	20.0	16.0	303 Stainless Steel
20142407	Hex Drive	12.0	16.0	M10	20.0	16.0	303 Stainless Steel
20142414	Hex Drive	12.0	20.0	M10	20.0	16.0	303 Stainless Steel
20142421	Hex Drive	12.0	25.0	M10	20.0	16.0	303 Stainless Steel
20142919	Hex Drive	12.0	30.0	M10	20.0	16.0	303 Stainless Steel
20144319	Hex Drive	12.0	8.0	M10	20.0	16.0	303 Stainless Steel
20144326	Hex Drive	12.0	10.0	M10	20.0	16.0	303 Stainless Steel
20144333	Hex Drive	12.0	14.0	M10	20.0	16.0	303 Stainless Steel
20144340	Hex Drive	12.0	18.0	M10	20.0	16.0	303 Stainless Steel
20144357	Hex Drive	12.0	35.0	M10	20.0	16.0	303 Stainless Steel
20144364	Hex Drive	12.0	40.0	M10	20.0	16.0	303 Stainless Steel

Shoulder Screws - Cap Head

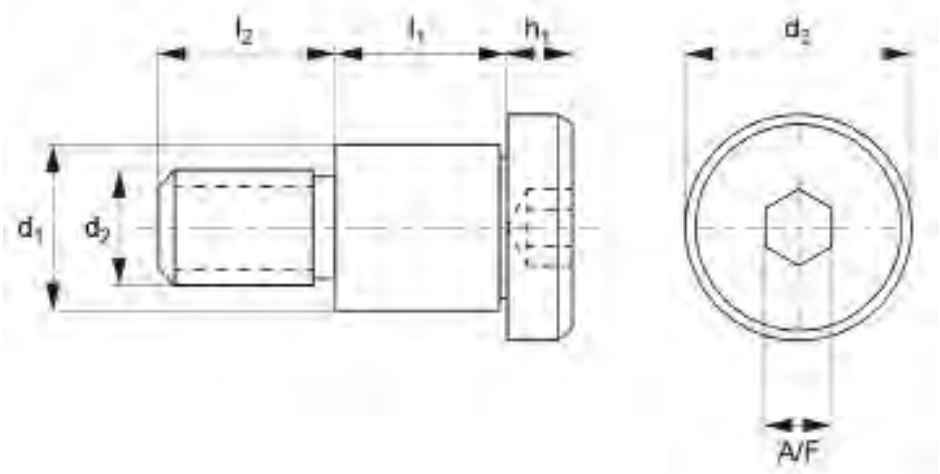



Part Number	Drive Type	d_1+0|-0.025	l_1+0.05|-0.0	d_2	d_3	l_2	Material
20144371	Hex Drive	12.0	45.0	M10	20.0	16.0	303 Stainless Steel
20144388	Hex Drive	12.0	50.0	M10	20.0	16.0	303 Stainless Steel
20144548	Hex Drive	12.0	55.0	M10	20.0	16.0	303 Stainless Steel
20144555	Hex Drive	12.0	75.0	M10	20.0	16.0	303 Stainless Steel
20144654	Hex Drive	12.0	65.0	M10	20.0	16.0	303 Stainless Steel
20243890	Hex Drive	12.0	8.0	M10	20.0	16.0	Titanium G5
20243906	Hex Drive	12.0	10.0	M10	20.0	16.0	Titanium G5
20243913	Hex Drive	12.0	12.0	M10	20.0	16.0	Titanium G5
20243920	Hex Drive	12.0	14.0	M10	20.0	16.0	Titanium G5
20243937	Hex Drive	12.0	16.0	M10	20.0	16.0	Titanium G5
20243944	Hex Drive	12.0	18.0	M10	20.0	16.0	Titanium G5
20243951	Hex Drive	12.0	20.0	M10	20.0	16.0	Titanium G5
20243968	Hex Drive	12.0	25.0	M10	20.0	16.0	Titanium G5
20243975	Hex Drive	12.0	30.0	M10	20.0	16.0	Titanium G5
20243982	Hex Drive	12.0	35.0	M10	20.0	16.0	Titanium G5
20243999	Hex Drive	12.0	40.0	M10	20.0	16.0	Titanium G5
20244002	Hex Drive	12.0	45.0	M10	20.0	16.0	Titanium G5
20244019	Hex Drive	12.0	50.0	M10	20.0	16.0	Titanium G5
20244026	Hex Drive	12.0	55.0	M10	20.0	16.0	Titanium G5
20244033	Hex Drive	12.0	60.0	M10	20.0	16.0	Titanium G5
20244040	Hex Drive	12.0	65.0	M10	20.0	16.0	Titanium G5

Shoulder Screws - Cap Head

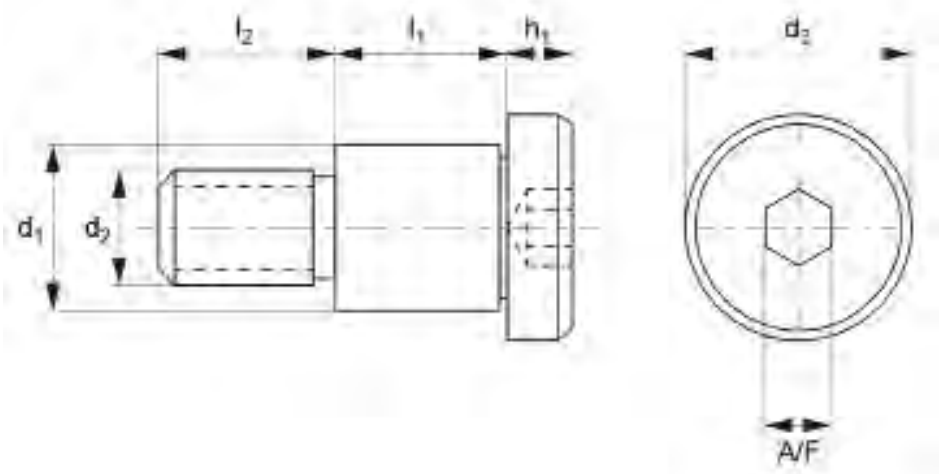



Part Number	Drive Type	d_1+0|-0.025	l_1+0.05|-0.0	d_2	d_3	l_2	Material
20244057	Hex Drive	12.0	70.0	M10	20.0	16.0	Titanium G5
20244064	Hex Drive	12.0	75.0	M10	20.0	16.0	Titanium G5
20244071	Hex Drive	12.0	80.0	M10	20.0	16.0	Titanium G5
20244088	Hex Drive	12.0	90.0	M10	20.0	16.0	Titanium G5
20244095	Hex Drive	12.0	100.0	M10	20.0	16.0	Titanium G5
20242398	Hex Drive	12.0	8.0	M10	20.0	16.0	Titanium G2
20242404	Hex Drive	12.0	10.0	M10	20.0	16.0	Titanium G2
20242411	Hex Drive	12.0	12.0	M10	20.0	16.0	Titanium G2
20242428	Hex Drive	12.0	14.0	M10	20.0	16.0	Titanium G2
20242435	Hex Drive	12.0	16.0	M10	20.0	16.0	Titanium G2
20242442	Hex Drive	12.0	18.0	M10	20.0	16.0	Titanium G2
20242459	Hex Drive	12.0	20.0	M10	20.0	16.0	Titanium G2
20242466	Hex Drive	12.0	25.0	M10	20.0	16.0	Titanium G2
20242473	Hex Drive	12.0	30.0	M10	20.0	16.0	Titanium G2
20242480	Hex Drive	12.0	35.0	M10	20.0	16.0	Titanium G2
20242497	Hex Drive	12.0	40.0	M10	20.0	16.0	Titanium G2
20242503	Hex Drive	12.0	45.0	M10	20.0	16.0	Titanium G2
20242510	Hex Drive	12.0	50.0	M10	20.0	16.0	Titanium G2
20242527	Hex Drive	12.0	55.0	M10	20.0	16.0	Titanium G2
20242534	Hex Drive	12.0	60.0	M10	20.0	16.0	Titanium G2
20242541	Hex Drive	12.0	65.0	M10	20.0	16.0	Titanium G2

Shoulder Screws - Cap Head

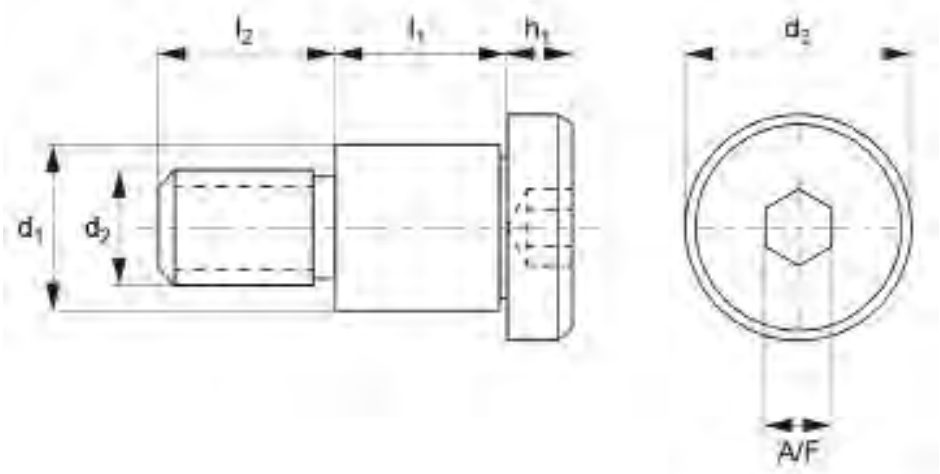



Part Number	Drive Type	d_1+0|-0.025	l_1+0.05|-0.0	d_2	d_3	l_2	Material
20242558	Hex Drive	12.0	70.0	M10	20.0	16.0	Titanium G2
20242565	Hex Drive	12.0	75.0	M10	20.0	16.0	Titanium G2
20242572	Hex Drive	12.0	80.0	M10	20.0	16.0	Titanium G2
20242589	Hex Drive	12.0	90.0	M10	20.0	16.0	Titanium G2
20242596	Hex Drive	12.0	100.0	M10	20.0	16.0	Titanium G2
20245504	Hex Drive	12.0	8.0	M10	20.0	16.0	316 Stainless Steel
20245511	Hex Drive	12.0	10.0	M10	20.0	16.0	316 Stainless Steel
20245528	Hex Drive	12.0	12.0	M10	20.0	16.0	316 Stainless Steel
20245535	Hex Drive	12.0	14.0	M10	20.0	16.0	316 Stainless Steel
20233464	Hex Drive	12.0	16.0	M10	20.0	16.0	316 Stainless Steel
20245542	Hex Drive	12.0	18.0	M10	20.0	16.0	316 Stainless Steel
20233471	Hex Drive	12.0	20.0	M10	20.0	16.0	316 Stainless Steel
20233488	Hex Drive	12.0	25.0	M10	20.0	16.0	316 Stainless Steel
20233495	Hex Drive	12.0	30.0	M10	20.0	16.0	316 Stainless Steel
20245559	Hex Drive	12.0	35.0	M10	20.0	16.0	316 Stainless Steel
20233501	Hex Drive	12.0	40.0	M10	20.0	16.0	316 Stainless Steel
20245566	Hex Drive	12.0	45.0	M10	20.0	16.0	316 Stainless Steel
20233518	Hex Drive	12.0	50.0	M10	20.0	16.0	316 Stainless Steel
20245573	Hex Drive	12.0	55.0	M10	20.0	16.0	316 Stainless Steel
20233525	Hex Drive	12.0	60.0	M10	20.0	16.0	316 Stainless Steel
20245580	Hex Drive	12.0	65.0	M10	20.0	16.0	316 Stainless Steel

Shoulder Screws - Cap Head

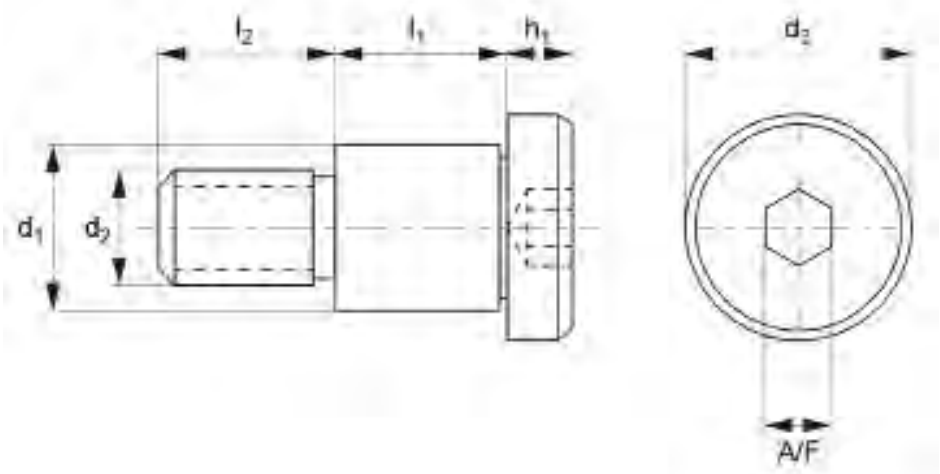



Part Number	Drive Type	d_1+0|-0.025	l_1+0.05|-0.0	d_2	d_3	l_2	Material
20233532	Hex Drive	12.0	70.0	M10	20.0	16.0	316 Stainless Steel
20249359	Torx Drive	12.0	8.0	M10	20.0	16.0	316 Stainless Steel
20235192	Torx Drive	12.0	10.0	M10	20.0	16.0	316 Stainless Steel
20235208	Torx Drive	12.0	12.0	M10	20.0	16.0	316 Stainless Steel
20249366	Torx Drive	12.0	14.0	M10	20.0	16.0	316 Stainless Steel
20235215	Torx Drive	12.0	16.0	M10	20.0	16.0	316 Stainless Steel
20249373	Torx Drive	12.0	18.0	M10	20.0	16.0	316 Stainless Steel
20235222	Torx Drive	12.0	20.0	M10	20.0	16.0	316 Stainless Steel
20235239	Torx Drive	12.0	25.0	M10	20.0	16.0	316 Stainless Steel
20235246	Torx Drive	12.0	30.0	M10	20.0	16.0	316 Stainless Steel
20249380	Torx Drive	12.0	35.0	M10	20.0	16.0	316 Stainless Steel
20235253	Torx Drive	12.0	40.0	M10	20.0	16.0	316 Stainless Steel
20249397	Torx Drive	12.0	45.0	M10	20.0	16.0	316 Stainless Steel
20235260	Torx Drive	12.0	50.0	M10	20.0	16.0	316 Stainless Steel
20249403	Torx Drive	12.0	55.0	M10	20.0	16.0	316 Stainless Steel
20235277	Torx Drive	12.0	60.0	M10	20.0	16.0	316 Stainless Steel
20249410	Torx Drive	12.0	65.0	M10	20.0	16.0	316 Stainless Steel
20235284	Torx Drive	12.0	70.0	M10	20.0	16.0	316 Stainless Steel
20249427	Torx Drive	12.0	75.0	M10	20.0	16.0	316 Stainless Steel
20249434	Torx Drive	12.0	80.0	M10	20.0	16.0	316 Stainless Steel
20249441	Torx Drive	12.0	90.0	M10	20.0	16.0	316 Stainless Steel

Shoulder Screws - Cap Head

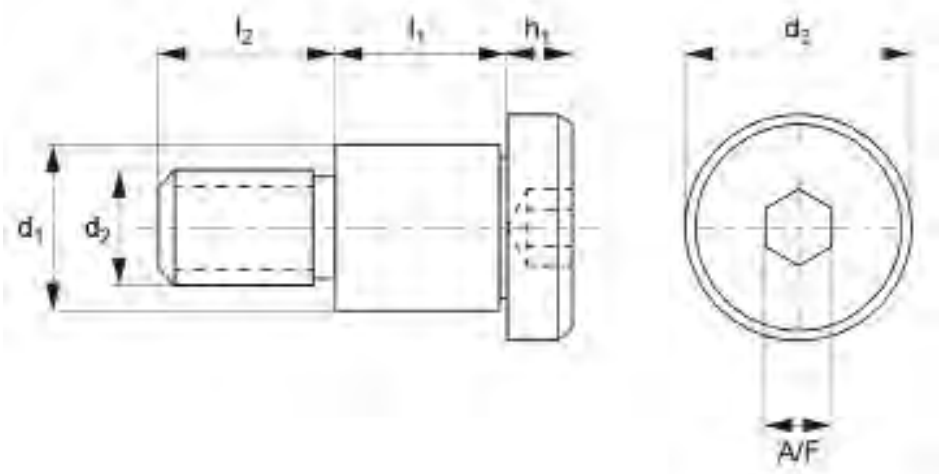



Part Number	Drive Type	d_1+0|-0.025	l_1+0.05|-0.0	d_2	d_3	l_2	Material
20249458	Torx Drive	12.0	100.0	M10	20.0	16.0	316 Stainless Steel
20231194	Hex Drive	12.0	8.0	M10	20.0	16.0	303 Stainless Steel
20231200	Hex Drive	12.0	10.0	M10	20.0	16.0	303 Stainless Steel
20231217	Hex Drive	12.0	12.0	M10	20.0	16.0	303 Stainless Steel
20231224	Hex Drive	12.0	14.0	M10	20.0	16.0	303 Stainless Steel
20231231	Hex Drive	12.0	16.0	M10	20.0	16.0	303 Stainless Steel
20231248	Hex Drive	12.0	18.0	M10	20.0	16.0	303 Stainless Steel
20231255	Hex Drive	12.0	20.0	M10	20.0	16.0	303 Stainless Steel
20231262	Hex Drive	12.0	25.0	M10	20.0	16.0	303 Stainless Steel
20231279	Hex Drive	12.0	30.0	M10	20.0	16.0	303 Stainless Steel
20231286	Hex Drive	12.0	35.0	M10	20.0	16.0	303 Stainless Steel
20231293	Hex Drive	12.0	40.0	M10	20.0	16.0	303 Stainless Steel
20231309	Hex Drive	12.0	45.0	M10	20.0	16.0	303 Stainless Steel
20231316	Hex Drive	12.0	50.0	M10	20.0	16.0	303 Stainless Steel
20231323	Hex Drive	12.0	55.0	M10	20.0	16.0	303 Stainless Steel
20231330	Hex Drive	12.0	60.0	M10	20.0	16.0	303 Stainless Steel
20231347	Hex Drive	12.0	65.0	M10	20.0	16.0	303 Stainless Steel
20231354	Hex Drive	12.0	70.0	M10	20.0	16.0	303 Stainless Steel
20231361	Hex Drive	12.0	75.0	M10	20.0	16.0	303 Stainless Steel
20231378	Hex Drive	12.0	80.0	M10	20.0	16.0	303 Stainless Steel
20231385	Hex Drive	12.0	90.0	M10	20.0	16.0	303 Stainless Steel

Shoulder Screws - Cap Head

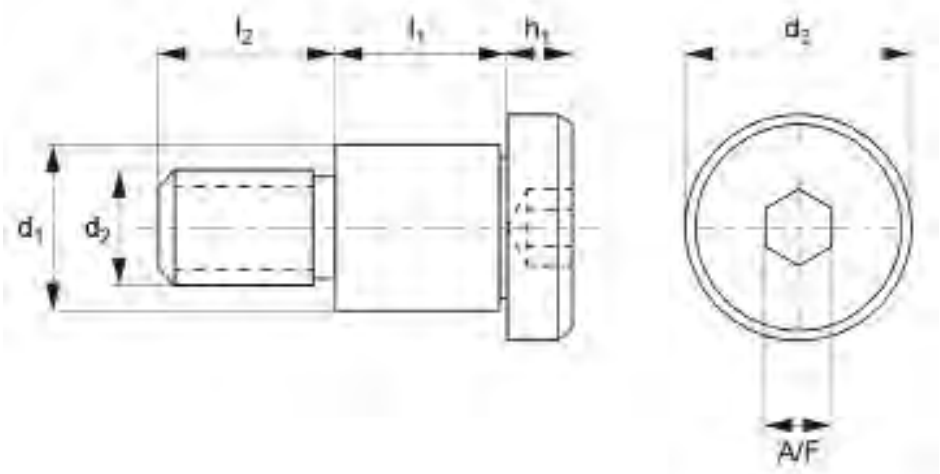



Part Number	Drive Type	d_1+0|-0.025	l_1+0.05|-0.0	d_2	d_3	l_2	Material
20231392	Hex Drive	12.0	100.0	M10	20.0	16.0	303 Stainless Steel
20232207	Slotted Drive	12.0	8.0	M10	20.0	16.0	303 Stainless Steel
20232214	Slotted Drive	12.0	10.0	M10	20.0	16.0	303 Stainless Steel
20232221	Slotted Drive	12.0	12.0	M10	20.0	16.0	303 Stainless Steel
20232238	Slotted Drive	12.0	16.0	M10	20.0	16.0	303 Stainless Steel
20232245	Slotted Drive	12.0	20.0	M10	20.0	16.0	303 Stainless Steel
20232252	Slotted Drive	12.0	25.0	M10	20.0	16.0	303 Stainless Steel
20248338	Torx Drive	12.0	8.0	M10	20.0	16.0	303 Stainless Steel
20234652	Torx Drive	12.0	10.0	M10	20.0	16.0	303 Stainless Steel
20234669	Torx Drive	12.0	12.0	M10	20.0	16.0	303 Stainless Steel
20248345	Torx Drive	12.0	14.0	M10	20.0	16.0	303 Stainless Steel
20234676	Torx Drive	12.0	16.0	M10	20.0	16.0	303 Stainless Steel
20248352	Torx Drive	12.0	18.0	M10	20.0	16.0	303 Stainless Steel
20234683	Torx Drive	12.0	20.0	M10	20.0	16.0	303 Stainless Steel
20234690	Torx Drive	12.0	25.0	M10	20.0	16.0	303 Stainless Steel
20234706	Torx Drive	12.0	30.0	M10	20.0	16.0	303 Stainless Steel
20248369	Torx Drive	12.0	35.0	M10	20.0	16.0	303 Stainless Steel
20234713	Torx Drive	12.0	40.0	M10	20.0	16.0	303 Stainless Steel
20248376	Torx Drive	12.0	45.0	M10	20.0	16.0	303 Stainless Steel
20234720	Torx Drive	12.0	50.0	M10	20.0	16.0	303 Stainless Steel
20248383	Torx Drive	12.0	55.0	M10	20.0	16.0	303 Stainless Steel

Shoulder Screws - Cap Head

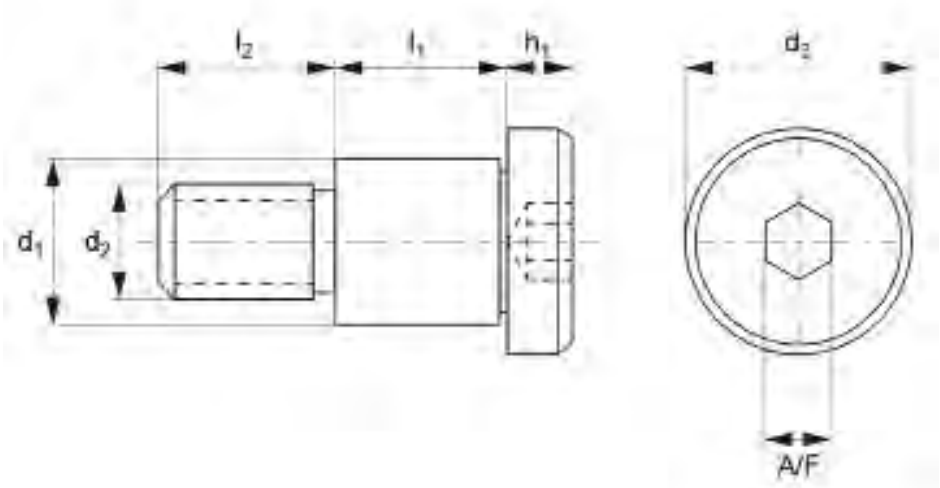



Part Number	Drive Type	d_1+0|-0.025	l_1+0.05|-0.0	d_2	d_3	l_2	Material
20234737	Torx Drive	12.0	60.0	M10	20.0	16.0	303 Stainless Steel
20248390	Torx Drive	12.0	65.0	M10	20.0	16.0	303 Stainless Steel
20234744	Torx Drive	12.0	70.0	M10	20.0	16.0	303 Stainless Steel
20248406	Torx Drive	12.0	75.0	M10	20.0	16.0	303 Stainless Steel
20248413	Torx Drive	12.0	80.0	M10	20.0	16.0	303 Stainless Steel
20248420	Torx Drive	12.0	90.0	M10	20.0	16.0	303 Stainless Steel
20248437	Torx Drive	12.0	100.0	M10	20.0	16.0	303 Stainless Steel
20222369	Hex Drive	12.0	12.0	M10	20.0	16.0	416 Stainless Steel
20222376	Hex Drive	12.0	16.0	M10	20.0	16.0	416 Stainless Steel
20222383	Hex Drive	12.0	20.0	M10	20.0	16.0	416 Stainless Steel
20222390	Hex Drive	12.0	25.0	M10	20.0	16.0	416 Stainless Steel
20225797	Hex Drive	12.0	30.0	M10	20.0	16.0	416 Stainless Steel
20245153	Hex Drive	12.0	8.0	M10	20.0	16.0	316 Stainless Steel
20245160	Hex Drive	12.0	10.0	M10	20.0	16.0	316 Stainless Steel
20245177	Hex Drive	12.0	12.0	M10	20.0	16.0	316 Stainless Steel
20245184	Hex Drive	12.0	14.0	M10	20.0	16.0	316 Stainless Steel
20222956	Hex Drive	12.0	16.0	M10	20.0	16.0	316 Stainless Steel
20245191	Hex Drive	12.0	18.0	M10	20.0	16.0	316 Stainless Steel
20222963	Hex Drive	12.0	20.0	M10	20.0	16.0	316 Stainless Steel
20222970	Hex Drive	12.0	25.0	M10	20.0	16.0	316 Stainless Steel
20222987	Hex Drive	12.0	30.0	M10	20.0	16.0	316 Stainless Steel

Shoulder Screws - Cap Head

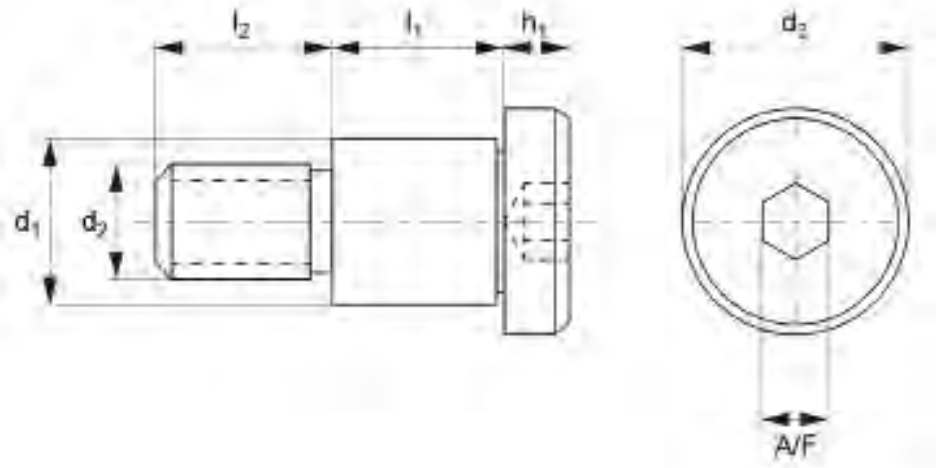



Part Number	Drive Type	d_1+0|-0.025	l_1+0.05|-0.0	d_2	d_3	l_2	Material
20245207	Hex Drive	12.0	35.0	M10	20.0	16.0	316 Stainless Steel
20222994	Hex Drive	12.0	40.0	M10	20.0	16.0	316 Stainless Steel
20245214	Hex Drive	12.0	45.0	M10	20.0	16.0	316 Stainless Steel
20223007	Hex Drive	12.0	50.0	M10	20.0	16.0	316 Stainless Steel
20245221	Hex Drive	12.0	55.0	M10	20.0	16.0	316 Stainless Steel
20223014	Hex Drive	12.0	60.0	M10	20.0	16.0	316 Stainless Steel
20245238	Hex Drive	12.0	65.0	M10	20.0	16.0	316 Stainless Steel
20223021	Hex Drive	12.0	70.0	M10	20.0	16.0	316 Stainless Steel
20247317	Torx Drive	12.0	8.0	M10	20.0	16.0	316 Stainless Steel
20234119	Torx Drive	12.0	10.0	M10	20.0	16.0	316 Stainless Steel
20234126	Torx Drive	12.0	12.0	M10	20.0	16.0	316 Stainless Steel
20247324	Torx Drive	12.0	14.0	M10	20.0	16.0	316 Stainless Steel
20234133	Torx Drive	12.0	16.0	M10	20.0	16.0	316 Stainless Steel
20247331	Torx Drive	12.0	18.0	M10	20.0	16.0	316 Stainless Steel
20234140	Torx Drive	12.0	20.0	M10	20.0	16.0	316 Stainless Steel
20234157	Torx Drive	12.0	25.0	M10	20.0	16.0	316 Stainless Steel
20234164	Torx Drive	12.0	30.0	M10	20.0	16.0	316 Stainless Steel
20247348	Torx Drive	12.0	35.0	M10	20.0	16.0	316 Stainless Steel
20234171	Torx Drive	12.0	40.0	M10	20.0	16.0	316 Stainless Steel
20247355	Torx Drive	12.0	45.0	M10	20.0	16.0	316 Stainless Steel
20234188	Torx Drive	12.0	50.0	M10	20.0	16.0	316 Stainless Steel

Shoulder Screws - Cap Head

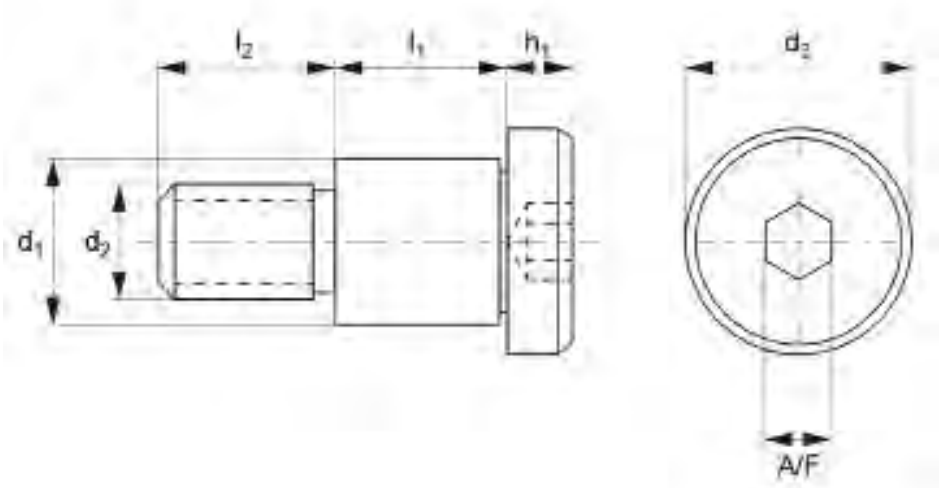



Part Number	Drive Type	d_1+0|-0.025	l_1+0.05|-0.0	d_2	d_3	l_2	Material
20247362	Torx Drive	12.0	55.0	M10	20.0	16.0	316 Stainless Steel
20234195	Torx Drive	12.0	60.0	M10	20.0	16.0	316 Stainless Steel
20247379	Torx Drive	12.0	65.0	M10	20.0	16.0	316 Stainless Steel
20234201	Torx Drive	12.0	70.0	M10	20.0	16.0	316 Stainless Steel
20247386	Torx Drive	12.0	75.0	M10	20.0	16.0	316 Stainless Steel
20247393	Torx Drive	12.0	80.0	M10	20.0	16.0	316 Stainless Steel
20247409	Torx Drive	12.0	90.0	M10	20.0	16.0	316 Stainless Steel
20247416	Torx Drive	12.0	100.0	M10	20.0	16.0	316 Stainless Steel
20228354	Slotted Drive	12.0	8.0	M10	20.0	16.0	303 Stainless Steel
20228361	Slotted Drive	12.0	10.0	M10	20.0	16.0	303 Stainless Steel
20221850	Slotted Drive	12.0	12.0	M10	20.0	16.0	303 Stainless Steel
20228378	Slotted Drive	12.0	16.0	M10	20.0	16.0	303 Stainless Steel
20228385	Slotted Drive	12.0	20.0	M10	20.0	16.0	303 Stainless Steel
20221898	Slotted Drive	12.0	25.0	M10	20.0	16.0	303 Stainless Steel
20246297	Torx Drive	12.0	8.0	M10	20.0	16.0	303 Stainless Steel
20241346	Torx Drive	12.0	10.0	M10	20.0	16.0	303 Stainless Steel
20241353	Torx Drive	12.0	12.0	M10	20.0	16.0	303 Stainless Steel
20246303	Torx Drive	12.0	14.0	M10	20.0	16.0	303 Stainless Steel
20225377	Torx Drive	12.0	16.0	M10	20.0	16.0	303 Stainless Steel
20246310	Torx Drive	12.0	18.0	M10	20.0	16.0	303 Stainless Steel
20225384	Torx Drive	12.0	20.0	M10	20.0	16.0	303 Stainless Steel

Shoulder Screws - Cap Head

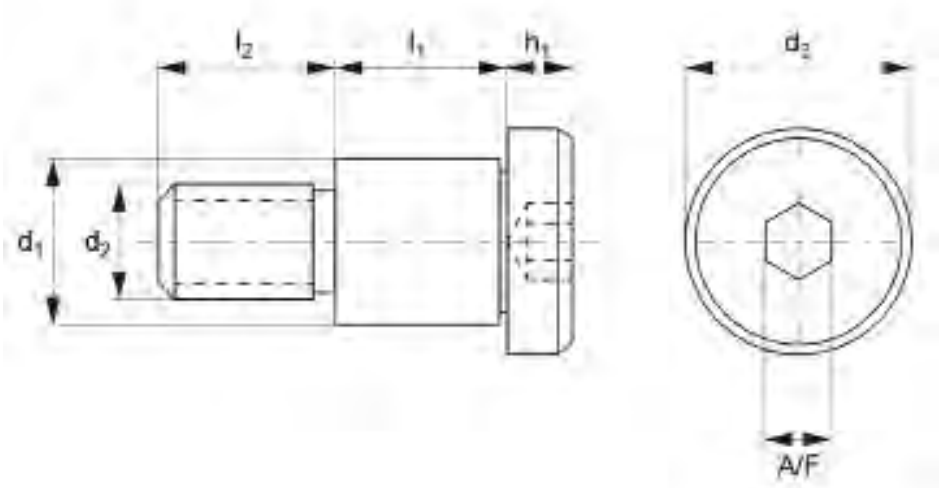



Part Number	Drive Type	d_1+0|-0.025	l_1+0.05|-0.0	d_2	d_3	l_2	Material
20225391	Torx Drive	12.0	25.0	M10	20.0	16.0	303 Stainless Steel
20225407	Torx Drive	12.0	30.0	M10	20.0	16.0	303 Stainless Steel
20246327	Torx Drive	12.0	35.0	M10	20.0	16.0	303 Stainless Steel
20225414	Torx Drive	12.0	40.0	M10	20.0	16.0	303 Stainless Steel
20246334	Torx Drive	12.0	45.0	M10	20.0	16.0	303 Stainless Steel
20225421	Torx Drive	12.0	50.0	M10	20.0	16.0	303 Stainless Steel
20246341	Torx Drive	12.0	55.0	M10	20.0	16.0	303 Stainless Steel
20225438	Torx Drive	12.0	60.0	M10	20.0	16.0	303 Stainless Steel
20246358	Torx Drive	12.0	65.0	M10	20.0	16.0	303 Stainless Steel
20225445	Torx Drive	12.0	70.0	M10	20.0	16.0	303 Stainless Steel
20246365	Torx Drive	12.0	75.0	M10	20.0	16.0	303 Stainless Steel
20246372	Torx Drive	12.0	80.0	M10	20.0	16.0	303 Stainless Steel
20246389	Torx Drive	12.0	90.0	M10	20.0	16.0	303 Stainless Steel
20246396	Torx Drive	12.0	100.0	M10	20.0	16.0	303 Stainless Steel
20141943	Hex Drive	16.0	100.0	M12	24.0	18.0	303 Stainless Steel
20141950	Hex Drive	16.0	25.0	M12	24.0	18.0	303 Stainless Steel
20141967	Hex Drive	16.0	30.0	M12	24.0	18.0	303 Stainless Steel
20141974	Hex Drive	16.0	40.0	M12	24.0	18.0	303 Stainless Steel
20141981	Hex Drive	16.0	50.0	M12	24.0	18.0	303 Stainless Steel
20141998	Hex Drive	16.0	60.0	M12	24.0	18.0	303 Stainless Steel
20142001	Hex Drive	16.0	70.0	M12	24.0	18.0	303 Stainless Steel

Shoulder Screws - Cap Head

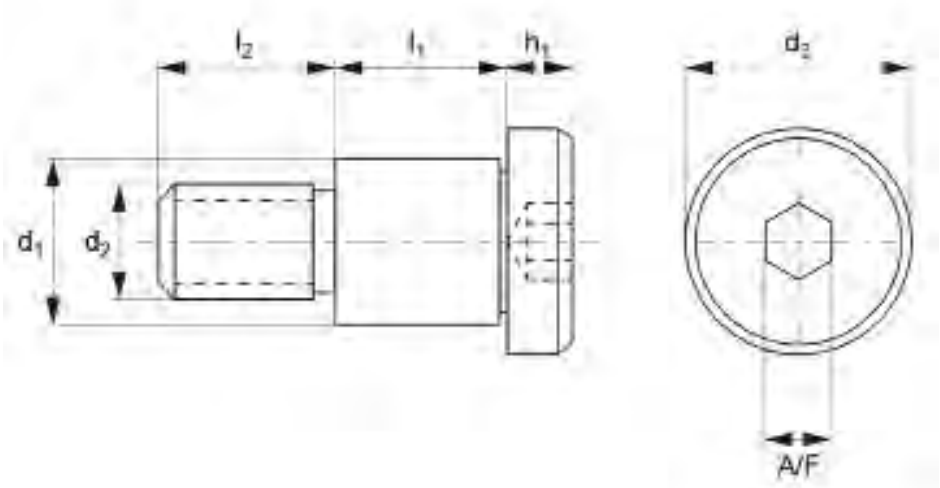



Part Number	Drive Type	d_1+0|-0.025	l_1+0.05|-0.0	d_2	d_3	l_2	Material
20142018	Hex Drive	16.0	80.0	M12	24.0	18.0	303 Stainless Steel
20142025	Hex Drive	16.0	90.0	M12	24.0	18.0	303 Stainless Steel
20144494	Hex Drive	16.0	45.0	M12	24.0	18.0	303 Stainless Steel
20144562	Hex Drive	16.0	35.0	M12	24.0	18.0	303 Stainless Steel
20144579	Hex Drive	16.0	55.0	M12	24.0	18.0	303 Stainless Steel
20144586	Hex Drive	16.0	65.0	M12	24.0	18.0	303 Stainless Steel
20144593	Hex Drive	16.0	75.0	M12	24.0	18.0	303 Stainless Steel
20244101	Hex Drive	16.0	25.0	M12	24.0	18.0	Titanium G5
20244118	Hex Drive	16.0	30.0	M12	24.0	18.0	Titanium G5
20244125	Hex Drive	16.0	35.0	M12	24.0	18.0	Titanium G5
20244132	Hex Drive	16.0	40.0	M12	24.0	18.0	Titanium G5
20244149	Hex Drive	16.0	45.0	M12	24.0	18.0	Titanium G5
20244156	Hex Drive	16.0	50.0	M12	24.0	18.0	Titanium G5
20244163	Hex Drive	16.0	55.0	M12	24.0	18.0	Titanium G5
20244170	Hex Drive	16.0	60.0	M12	24.0	18.0	Titanium G5
20244187	Hex Drive	16.0	65.0	M12	24.0	18.0	Titanium G5
20244194	Hex Drive	16.0	70.0	M12	24.0	18.0	Titanium G5
20244200	Hex Drive	16.0	75.0	M12	24.0	18.0	Titanium G5
20244217	Hex Drive	16.0	80.0	M12	24.0	18.0	Titanium G5
20244224	Hex Drive	16.0	90.0	M12	24.0	18.0	Titanium G5
20244231	Hex Drive	16.0	100.0	M12	24.0	18.0	Titanium G5

Shoulder Screws - Cap Head

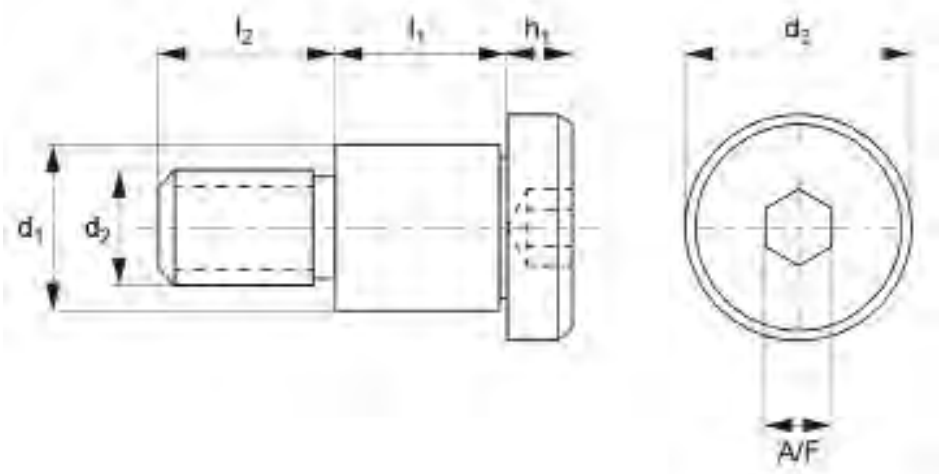



Part Number	Drive Type	d_1+0|-0.025	l_1+0.05|-0.0	d_2	d_3	l_2	Material
20242602	Hex Drive	16.0	25.0	M12	24.0	18.0	Titanium G2
20242619	Hex Drive	16.0	30.0	M12	24.0	18.0	Titanium G2
20242626	Hex Drive	16.0	35.0	M12	24.0	18.0	Titanium G2
20242633	Hex Drive	16.0	40.0	M12	24.0	18.0	Titanium G2
20242640	Hex Drive	16.0	45.0	M12	24.0	18.0	Titanium G2
20242657	Hex Drive	16.0	50.0	M12	24.0	18.0	Titanium G2
20242664	Hex Drive	16.0	55.0	M12	24.0	18.0	Titanium G2
20242671	Hex Drive	16.0	60.0	M12	24.0	18.0	Titanium G2
20242688	Hex Drive	16.0	65.0	M12	24.0	18.0	Titanium G2
20242695	Hex Drive	16.0	70.0	M12	24.0	18.0	Titanium G2
20242701	Hex Drive	16.0	75.0	M12	24.0	18.0	Titanium G2
20242718	Hex Drive	16.0	80.0	M12	24.0	18.0	Titanium G2
20242725	Hex Drive	16.0	90.0	M12	24.0	18.0	Titanium G2
20242732	Hex Drive	16.0	100.0	M12	24.0	18.0	Titanium G2
20233549	Hex Drive	16.0	25.0	M12	24.0	18.0	316 Stainless Steel
20233556	Hex Drive	16.0	30.0	M12	24.0	18.0	316 Stainless Steel
20233563	Hex Drive	16.0	35.0	M12	24.0	18.0	316 Stainless Steel
20233570	Hex Drive	16.0	40.0	M12	24.0	18.0	316 Stainless Steel
20233587	Hex Drive	16.0	45.0	M12	24.0	18.0	316 Stainless Steel
20233594	Hex Drive	16.0	50.0	M12	24.0	18.0	316 Stainless Steel
20233600	Hex Drive	16.0	55.0	M12	24.0	18.0	316 Stainless Steel

Shoulder Screws - Cap Head

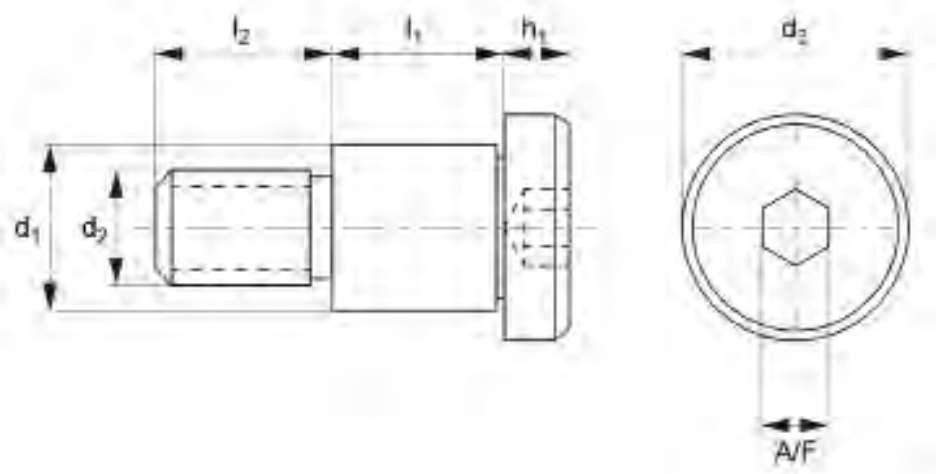



Part Number	Drive Type	d_1+0|-0.025	l_1+0.05|-0.0	d_2	d_3	l_2	Material
20233617	Hex Drive	16.0	60.0	M12	24.0	18.0	316 Stainless Steel
20233624	Hex Drive	16.0	65.0	M12	24.0	18.0	316 Stainless Steel
20233631	Hex Drive	16.0	70.0	M12	24.0	18.0	316 Stainless Steel
20233648	Hex Drive	16.0	75.0	M12	24.0	18.0	316 Stainless Steel
20233655	Hex Drive	16.0	80.0	M12	24.0	18.0	316 Stainless Steel
20233662	Hex Drive	16.0	90.0	M12	24.0	18.0	316 Stainless Steel
20233679	Hex Drive	16.0	100.0	M12	24.0	18.0	316 Stainless Steel
20249465	Torx Drive	16.0	25.0	M12	24.0	18.0	316 Stainless Steel
20249472	Torx Drive	16.0	30.0	M12	24.0	18.0	316 Stainless Steel
20249489	Torx Drive	16.0	35.0	M12	24.0	18.0	316 Stainless Steel
20249496	Torx Drive	16.0	40.0	M12	24.0	18.0	316 Stainless Steel
20249502	Torx Drive	16.0	45.0	M12	24.0	18.0	316 Stainless Steel
20249519	Torx Drive	16.0	50.0	M12	24.0	18.0	316 Stainless Steel
20249526	Torx Drive	16.0	55.0	M12	24.0	18.0	316 Stainless Steel
20249533	Torx Drive	16.0	60.0	M12	24.0	18.0	316 Stainless Steel
20249540	Torx Drive	16.0	65.0	M12	24.0	18.0	316 Stainless Steel
20249557	Torx Drive	16.0	70.0	M12	24.0	18.0	316 Stainless Steel
20249564	Torx Drive	16.0	75.0	M12	24.0	18.0	316 Stainless Steel
20249571	Torx Drive	16.0	80.0	M12	24.0	18.0	316 Stainless Steel
20249588	Torx Drive	16.0	90.0	M12	24.0	18.0	316 Stainless Steel
20249595	Torx Drive	16.0	100.0	M12	24.0	18.0	316 Stainless Steel

Shoulder Screws - Cap Head

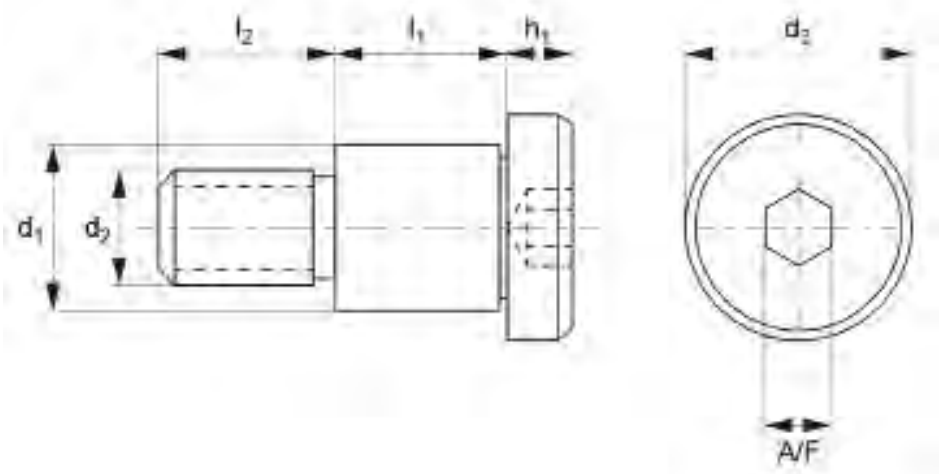



Part Number	Drive Type	d_1+0|-0.025	l_1+0.05|-0.0	d_2	d_3	l_2	Material
20231408	Hex Drive	16.0	25.0	M12	24.0	18.0	303 Stainless Steel
20231415	Hex Drive	16.0	30.0	M12	24.0	18.0	303 Stainless Steel
20231422	Hex Drive	16.0	35.0	M12	24.0	18.0	303 Stainless Steel
20231439	Hex Drive	16.0	40.0	M12	24.0	18.0	303 Stainless Steel
20231446	Hex Drive	16.0	45.0	M12	24.0	18.0	303 Stainless Steel
20231453	Hex Drive	16.0	50.0	M12	24.0	18.0	303 Stainless Steel
20231460	Hex Drive	16.0	55.0	M12	24.0	18.0	303 Stainless Steel
20231477	Hex Drive	16.0	60.0	M12	24.0	18.0	303 Stainless Steel
20231484	Hex Drive	16.0	65.0	M12	24.0	18.0	303 Stainless Steel
20231491	Hex Drive	16.0	70.0	M12	24.0	18.0	303 Stainless Steel
20231507	Hex Drive	16.0	75.0	M12	24.0	18.0	303 Stainless Steel
20231514	Hex Drive	16.0	80.0	M12	24.0	18.0	303 Stainless Steel
20231521	Hex Drive	16.0	90.0	M12	24.0	18.0	303 Stainless Steel
20231538	Hex Drive	16.0	100.0	M12	24.0	18.0	303 Stainless Steel
20248444	Torx Drive	16.0	25.0	M12	24.0	18.0	303 Stainless Steel
20248451	Torx Drive	16.0	30.0	M12	24.0	18.0	303 Stainless Steel
20248468	Torx Drive	16.0	35.0	M12	24.0	18.0	303 Stainless Steel
20248475	Torx Drive	16.0	40.0	M12	24.0	18.0	303 Stainless Steel
20248482	Torx Drive	16.0	45.0	M12	24.0	18.0	303 Stainless Steel
20248499	Torx Drive	16.0	50.0	M12	24.0	18.0	303 Stainless Steel
20248505	Torx Drive	16.0	55.0	M12	24.0	18.0	303 Stainless Steel

Shoulder Screws - Cap Head

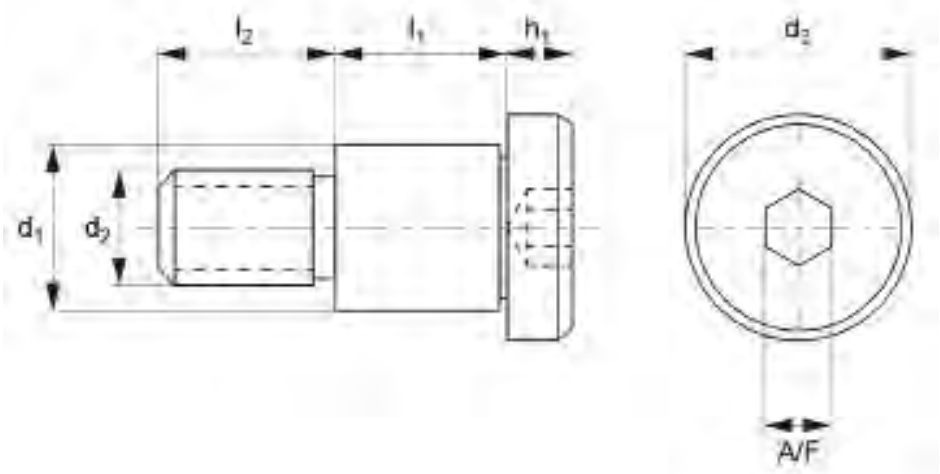



Part Number	Drive Type	d_1+0|-0.025	l_1+0.05|-0.0	d_2	d_3	l_2	Material
20248512	Torx Drive	16.0	60.0	M12	24.0	18.0	303 Stainless Steel
20248529	Torx Drive	16.0	65.0	M12	24.0	18.0	303 Stainless Steel
20248536	Torx Drive	16.0	70.0	M12	24.0	18.0	303 Stainless Steel
20248543	Torx Drive	16.0	75.0	M12	24.0	18.0	303 Stainless Steel
20248550	Torx Drive	16.0	80.0	M12	24.0	18.0	303 Stainless Steel
20248567	Torx Drive	16.0	90.0	M12	24.0	18.0	303 Stainless Steel
20248574	Torx Drive	16.0	100.0	M12	24.0	18.0	303 Stainless Steel
20244873	Hex Drive	16.0	25.0	M12	24.0	18.0	316 Stainless Steel
20223038	Hex Drive	16.0	30.0	M12	24.0	18.0	316 Stainless Steel
20244880	Hex Drive	16.0	35.0	M12	24.0	18.0	316 Stainless Steel
20223045	Hex Drive	16.0	40.0	M12	24.0	18.0	316 Stainless Steel
20244897	Hex Drive	16.0	45.0	M12	24.0	18.0	316 Stainless Steel
20245245	Hex Drive	16.0	50.0	M12	24.0	18.0	316 Stainless Steel
20244903	Hex Drive	16.0	55.0	M12	24.0	18.0	316 Stainless Steel
20223052	Hex Drive	16.0	60.0	M12	24.0	18.0	316 Stainless Steel
20244910	Hex Drive	16.0	65.0	M12	24.0	18.0	316 Stainless Steel
20223069	Hex Drive	16.0	70.0	M12	24.0	18.0	316 Stainless Steel
20244927	Hex Drive	16.0	75.0	M12	24.0	18.0	316 Stainless Steel
20223076	Hex Drive	16.0	80.0	M12	24.0	18.0	316 Stainless Steel
20223083	Hex Drive	16.0	90.0	M12	24.0	18.0	316 Stainless Steel
20244934	Hex Drive	16.0	100.0	M12	24.0	18.0	316 Stainless Steel

Shoulder Screws - Cap Head

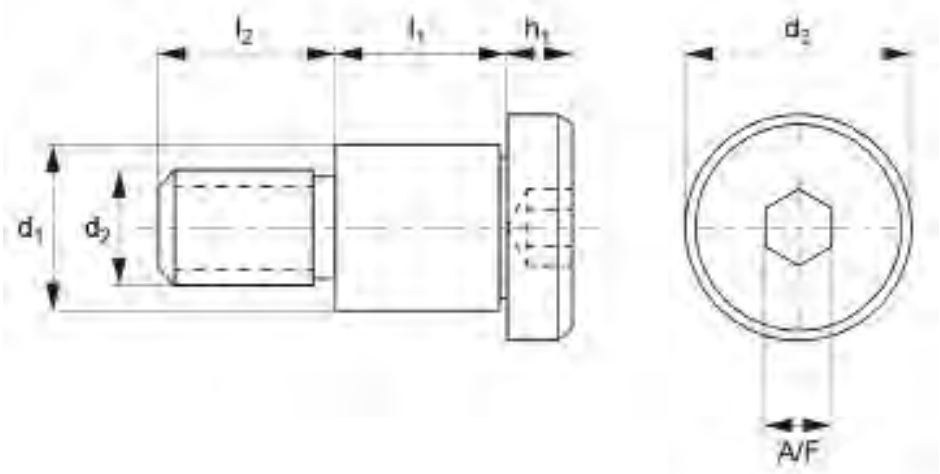



Part Number	Drive Type	d_1+0|-0.025	l_1+0.05|-0.0	d_2	d_3	l_2	Material
20247423	Torx Drive	16.0	25.0	M12	24.0	18.0	316 Stainless Steel
20247430	Torx Drive	16.0	30.0	M12	24.0	18.0	316 Stainless Steel
20247447	Torx Drive	16.0	35.0	M12	24.0	18.0	316 Stainless Steel
20247454	Torx Drive	16.0	40.0	M12	24.0	18.0	316 Stainless Steel
20247461	Torx Drive	16.0	45.0	M12	24.0	18.0	316 Stainless Steel
20247478	Torx Drive	16.0	50.0	M12	24.0	18.0	316 Stainless Steel
20247485	Torx Drive	16.0	55.0	M12	24.0	18.0	316 Stainless Steel
20247492	Torx Drive	16.0	60.0	M12	24.0	18.0	316 Stainless Steel
20247508	Torx Drive	16.0	65.0	M12	24.0	18.0	316 Stainless Steel
20247515	Torx Drive	16.0	70.0	M12	24.0	18.0	316 Stainless Steel
20247522	Torx Drive	16.0	75.0	M12	24.0	18.0	316 Stainless Steel
20247539	Torx Drive	16.0	80.0	M12	24.0	18.0	316 Stainless Steel
20247546	Torx Drive	16.0	90.0	M12	24.0	18.0	316 Stainless Steel
20247553	Torx Drive	16.0	100.0	M12	24.0	18.0	316 Stainless Steel
20246402	Torx Drive	16.0	25.0	M12	24.0	18.0	303 Stainless Steel
20246419	Torx Drive	16.0	30.0	M12	24.0	18.0	303 Stainless Steel
20246426	Torx Drive	16.0	35.0	M12	24.0	18.0	303 Stainless Steel
20246433	Torx Drive	16.0	40.0	M12	24.0	18.0	303 Stainless Steel
20246440	Torx Drive	16.0	45.0	M12	24.0	18.0	303 Stainless Steel
20246457	Torx Drive	16.0	50.0	M12	24.0	18.0	303 Stainless Steel
20246464	Torx Drive	16.0	55.0	M12	24.0	18.0	303 Stainless Steel

Shoulder Screws - Cap Head

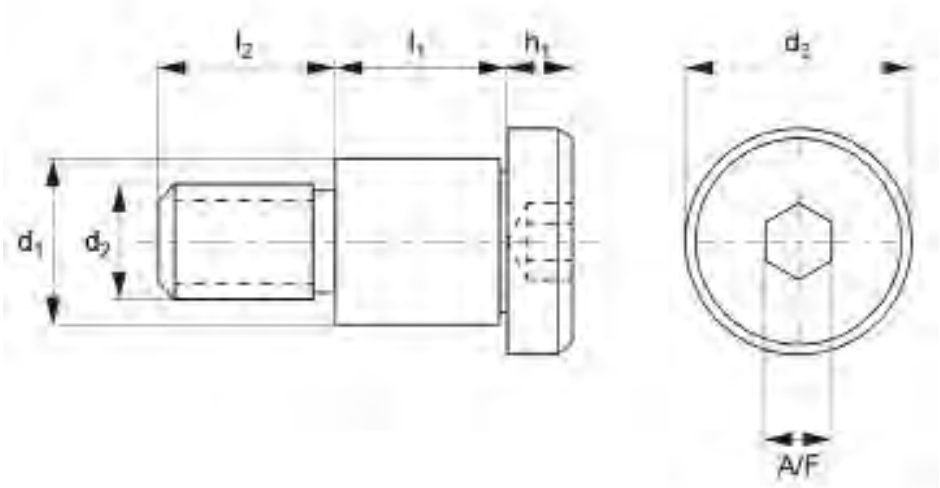



Part Number	Drive Type	d_1+0|-0.025	l_1+0.05|-0.0	d_2	d_3	l_2	Material
20246471	Torx Drive	16.0	60.0	M12	24.0	18.0	303 Stainless Steel
20246488	Torx Drive	16.0	65.0	M12	24.0	18.0	303 Stainless Steel
20246495	Torx Drive	16.0	70.0	M12	24.0	18.0	303 Stainless Steel
20246501	Torx Drive	16.0	75.0	M12	24.0	18.0	303 Stainless Steel
20246518	Torx Drive	16.0	80.0	M12	24.0	18.0	303 Stainless Steel
20246525	Torx Drive	16.0	90.0	M12	24.0	18.0	303 Stainless Steel
20246532	Torx Drive	16.0	100.0	M12	24.0	18.0	303 Stainless Steel
20142520	Hex Drive	20.0	30.0	M16	30.0	22.0	303 Stainless Steel
20142537	Hex Drive	20.0	40.0	M16	30.0	22.0	303 Stainless Steel
20142544	Hex Drive	20.0	50.0	M16	30.0	22.0	303 Stainless Steel
20142551	Hex Drive	20.0	60.0	M16	30.0	22.0	303 Stainless Steel
20142568	Hex Drive	20.0	70.0	M16	30.0	22.0	303 Stainless Steel
20142575	Hex Drive	20.0	80.0	M16	30.0	22.0	303 Stainless Steel
20142582	Hex Drive	20.0	90.0	M16	30.0	22.0	303 Stainless Steel
20142599	Hex Drive	20.0	100.0	M16	30.0	22.0	303 Stainless Steel
20144609	Hex Drive	20.0	35.0	M16	30.0	22.0	303 Stainless Steel
20144616	Hex Drive	20.0	45.0	M16	30.0	22.0	303 Stainless Steel
20144623	Hex Drive	20.0	55.0	M16	30.0	22.0	303 Stainless Steel
20144630	Hex Drive	20.0	75.0	M16	30.0	22.0	303 Stainless Steel
20144647	Hex Drive	20.0	65.0	M16	30.0	22.0	303 Stainless Steel
20244248	Hex Drive	20.0	30.0	M16	30.0	22.0	Titanium G5

Shoulder Screws - Cap Head

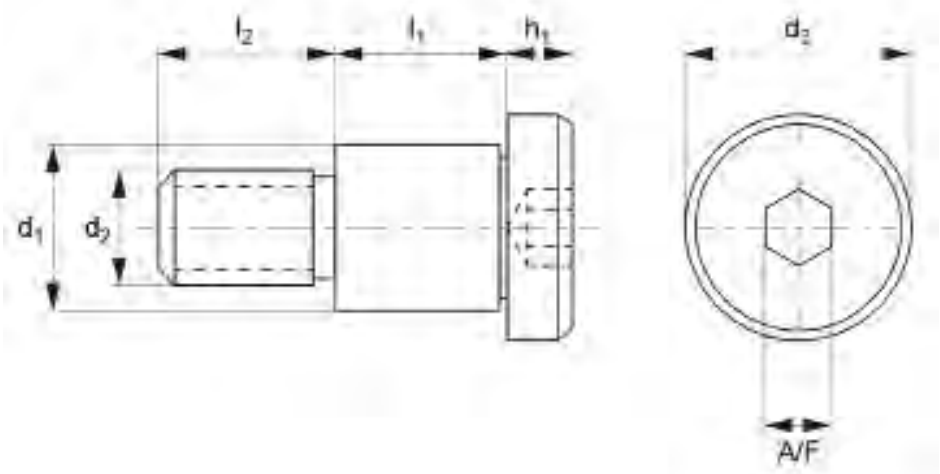



Part Number	Drive Type	d_1+0|-0.025	l_1+0.05|-0.0	d_2	d_3	l_2	Material
20244255	Hex Drive	20.0	35.0	M16	30.0	22.0	Titanium G5
20244262	Hex Drive	20.0	40.0	M16	30.0	22.0	Titanium G5
20244279	Hex Drive	20.0	45.0	M16	30.0	22.0	Titanium G5
20244286	Hex Drive	20.0	50.0	M16	30.0	22.0	Titanium G5
20244293	Hex Drive	20.0	55.0	M16	30.0	22.0	Titanium G5
20244309	Hex Drive	20.0	60.0	M16	30.0	22.0	Titanium G5
20244316	Hex Drive	20.0	65.0	M16	30.0	22.0	Titanium G5
20244323	Hex Drive	20.0	70.0	M16	30.0	22.0	Titanium G5
20244330	Hex Drive	20.0	75.0	M16	30.0	22.0	Titanium G5
20244347	Hex Drive	20.0	80.0	M16	30.0	22.0	Titanium G5
20244354	Hex Drive	20.0	90.0	M16	30.0	22.0	Titanium G5
20244361	Hex Drive	20.0	100.0	M16	30.0	22.0	Titanium G5
20242749	Hex Drive	20.0	30.0	M16	30.0	22.0	Titanium G2
20242756	Hex Drive	20.0	35.0	M16	30.0	22.0	Titanium G2
20242763	Hex Drive	20.0	40.0	M16	30.0	22.0	Titanium G2
20242770	Hex Drive	20.0	45.0	M16	30.0	22.0	Titanium G2
20242787	Hex Drive	20.0	50.0	M16	30.0	22.0	Titanium G2
20242794	Hex Drive	20.0	55.0	M16	30.0	22.0	Titanium G2
20242800	Hex Drive	20.0	60.0	M16	30.0	22.0	Titanium G2
20242817	Hex Drive	20.0	65.0	M16	30.0	22.0	Titanium G2
20242824	Hex Drive	20.0	70.0	M16	30.0	22.0	Titanium G2

Shoulder Screws - Cap Head

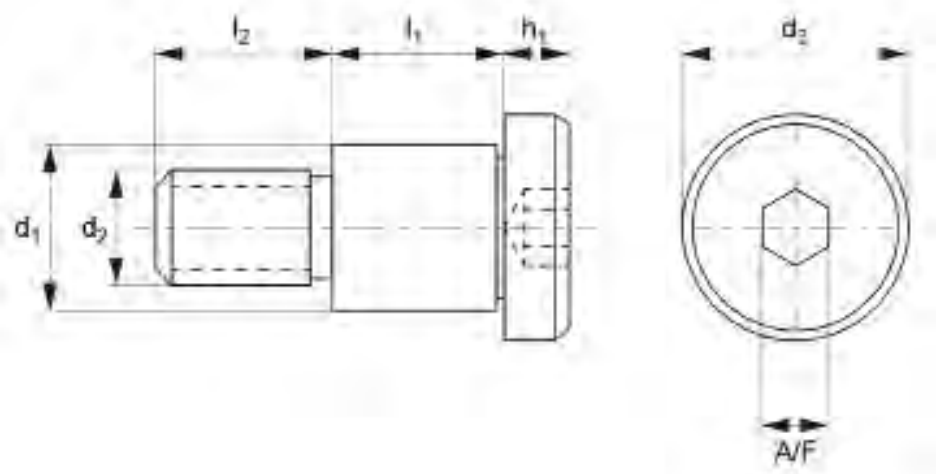



Part Number	Drive Type	d_1+0|-0.025	l_1+0.05|-0.0	d_2	d_3	l_2	Material
20242831	Hex Drive	20.0	75.0	M16	30.0	22.0	Titanium G2
20242848	Hex Drive	20.0	80.0	M16	30.0	22.0	Titanium G2
20242855	Hex Drive	20.0	90.0	M16	30.0	22.0	Titanium G2
20242862	Hex Drive	20.0	100.0	M16	30.0	22.0	Titanium G2
20245597	Hex Drive	20.0	30.0	M16	30.0	22.0	316 Stainless Steel
20245603	Hex Drive	20.0	35.0	M16	30.0	22.0	316 Stainless Steel
20245610	Hex Drive	20.0	40.0	M16	30.0	22.0	316 Stainless Steel
20245627	Hex Drive	20.0	45.0	M16	30.0	22.0	316 Stainless Steel
20245634	Hex Drive	20.0	50.0	M16	30.0	22.0	316 Stainless Steel
20249601	Torx Drive	20.0	30.0	M16	30.0	22.0	316 Stainless Steel
20249618	Torx Drive	20.0	35.0	M16	30.0	22.0	316 Stainless Steel
20249625	Torx Drive	20.0	40.0	M16	30.0	22.0	316 Stainless Steel
20249632	Torx Drive	20.0	45.0	M16	30.0	22.0	316 Stainless Steel
20249649	Torx Drive	20.0	50.0	M16	30.0	22.0	316 Stainless Steel
20249656	Torx Drive	20.0	55.0	M16	30.0	22.0	316 Stainless Steel
20249663	Torx Drive	20.0	60.0	M16	30.0	22.0	316 Stainless Steel
20249670	Torx Drive	20.0	65.0	M16	30.0	22.0	316 Stainless Steel
20249687	Torx Drive	20.0	70.0	M16	30.0	22.0	316 Stainless Steel
20249694	Torx Drive	20.0	75.0	M16	30.0	22.0	316 Stainless Steel
20249700	Torx Drive	20.0	80.0	M16	30.0	22.0	316 Stainless Steel
20249717	Torx Drive	20.0	90.0	M16	30.0	22.0	316 Stainless Steel

Shoulder Screws - Cap Head

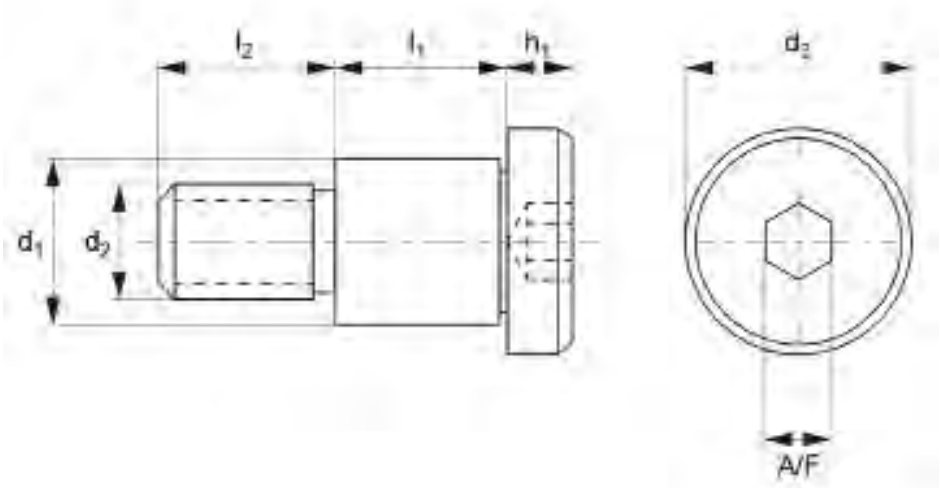



Part Number	Drive Type	d_1+0|-0.025	l_1+0.05|-0.0	d_2	d_3	l_2	Material
20249724	Torx Drive	20.0	100.0	M16	30.0	22.0	316 Stainless Steel
20231545	Hex Drive	20.0	30.0	M16	30.0	22.0	303 Stainless Steel
20231552	Hex Drive	20.0	35.0	M16	30.0	22.0	303 Stainless Steel
20231569	Hex Drive	20.0	40.0	M16	30.0	22.0	303 Stainless Steel
20231576	Hex Drive	20.0	45.0	M16	30.0	22.0	303 Stainless Steel
20231583	Hex Drive	20.0	50.0	M16	30.0	22.0	303 Stainless Steel
20231590	Hex Drive	20.0	55.0	M16	30.0	22.0	303 Stainless Steel
20231606	Hex Drive	20.0	60.0	M16	30.0	22.0	303 Stainless Steel
20231613	Hex Drive	20.0	65.0	M16	30.0	22.0	303 Stainless Steel
20231620	Hex Drive	20.0	70.0	M16	30.0	22.0	303 Stainless Steel
20231637	Hex Drive	20.0	75.0	M16	30.0	22.0	303 Stainless Steel
20231644	Hex Drive	20.0	80.0	M16	30.0	22.0	303 Stainless Steel
20231651	Hex Drive	20.0	90.0	M16	30.0	22.0	303 Stainless Steel
20231668	Hex Drive	20.0	100.0	M16	30.0	22.0	303 Stainless Steel
20248581	Torx Drive	20.0	30.0	M16	30.0	22.0	303 Stainless Steel
20248598	Torx Drive	20.0	35.0	M16	30.0	22.0	303 Stainless Steel
20248604	Torx Drive	20.0	40.0	M16	30.0	22.0	303 Stainless Steel
20248611	Torx Drive	20.0	45.0	M16	30.0	22.0	303 Stainless Steel
20248628	Torx Drive	20.0	50.0	M16	30.0	22.0	303 Stainless Steel
20248635	Torx Drive	20.0	55.0	M16	30.0	22.0	303 Stainless Steel
20248642	Torx Drive	20.0	60.0	M16	30.0	22.0	303 Stainless Steel

Shoulder Screws - Cap Head

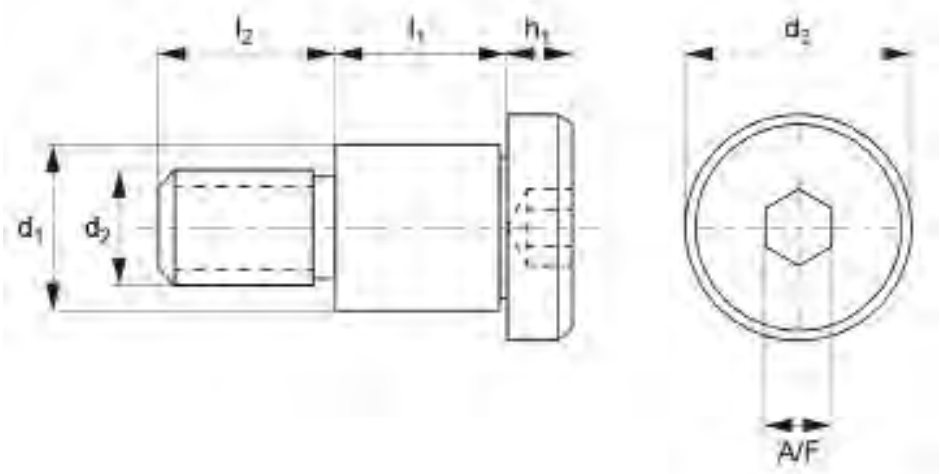



Part Number	Drive Type	d_1+0|-0.025	l_1+0.05|-0.0	d_2	d_3	l_2	Material
20248659	Torx Drive	20.0	65.0	M16	30.0	22.0	303 Stainless Steel
20248666	Torx Drive	20.0	70.0	M16	30.0	22.0	303 Stainless Steel
20248673	Torx Drive	20.0	75.0	M16	30.0	22.0	303 Stainless Steel
20248680	Torx Drive	20.0	80.0	M16	30.0	22.0	303 Stainless Steel
20248697	Torx Drive	20.0	90.0	M16	30.0	22.0	303 Stainless Steel
20248703	Torx Drive	20.0	100.0	M16	30.0	22.0	303 Stainless Steel
20245252	Hex Drive	20.0	30.0	M16	30.0	22.0	316 Stainless Steel
20245269	Hex Drive	20.0	35.0	M16	30.0	22.0	316 Stainless Steel
20223090	Hex Drive	20.0	40.0	M16	30.0	22.0	316 Stainless Steel
20245276	Hex Drive	20.0	45.0	M16	30.0	22.0	316 Stainless Steel
20245283	Hex Drive	20.0	50.0	M16	30.0	22.0	316 Stainless Steel
20247560	Torx Drive	20.0	30.0	M16	30.0	22.0	316 Stainless Steel
20247577	Torx Drive	20.0	35.0	M16	30.0	22.0	316 Stainless Steel
20247584	Torx Drive	20.0	40.0	M16	30.0	22.0	316 Stainless Steel
20247591	Torx Drive	20.0	45.0	M16	30.0	22.0	316 Stainless Steel
20247607	Torx Drive	20.0	50.0	M16	30.0	22.0	316 Stainless Steel
20247614	Torx Drive	20.0	55.0	M16	30.0	22.0	316 Stainless Steel
20247621	Torx Drive	20.0	60.0	M16	30.0	22.0	316 Stainless Steel
20247638	Torx Drive	20.0	65.0	M16	30.0	22.0	316 Stainless Steel
20247645	Torx Drive	20.0	70.0	M16	30.0	22.0	316 Stainless Steel
20247652	Torx Drive	20.0	75.0	M16	30.0	22.0	316 Stainless Steel

Shoulder Screws - Cap Head

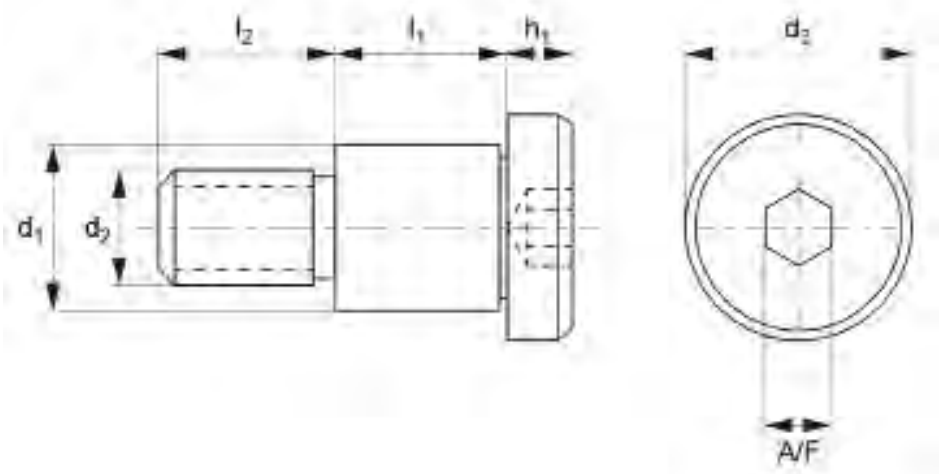



Part Number	Drive Type	d_1+0|-0.025	l_1+0.05|-0.0	d_2	d_3	l_2	Material
20247669	Torx Drive	20.0	80.0	M16	30.0	22.0	316 Stainless Steel
20247676	Torx Drive	20.0	90.0	M16	30.0	22.0	316 Stainless Steel
20247683	Torx Drive	20.0	100.0	M16	30.0	22.0	316 Stainless Steel
20246549	Torx Drive	20.0	30.0	M16	30.0	22.0	303 Stainless Steel
20246556	Torx Drive	20.0	35.0	M16	30.0	22.0	303 Stainless Steel
20246563	Torx Drive	20.0	40.0	M16	30.0	22.0	303 Stainless Steel
20246570	Torx Drive	20.0	45.0	M16	30.0	22.0	303 Stainless Steel
20246587	Torx Drive	20.0	50.0	M16	30.0	22.0	303 Stainless Steel
20246594	Torx Drive	20.0	55.0	M16	30.0	22.0	303 Stainless Steel
20246600	Torx Drive	20.0	60.0	M16	30.0	22.0	303 Stainless Steel
20246617	Torx Drive	20.0	65.0	M16	30.0	22.0	303 Stainless Steel
20246624	Torx Drive	20.0	70.0	M16	30.0	22.0	303 Stainless Steel
20246631	Torx Drive	20.0	75.0	M16	30.0	22.0	303 Stainless Steel
20246648	Torx Drive	20.0	80.0	M16	30.0	22.0	303 Stainless Steel
20246655	Torx Drive	20.0	90.0	M16	30.0	22.0	303 Stainless Steel
20246662	Torx Drive	20.0	100.0	M16	30.0	22.0	303 Stainless Steel

Shoulder Screws - Hex Socket Head

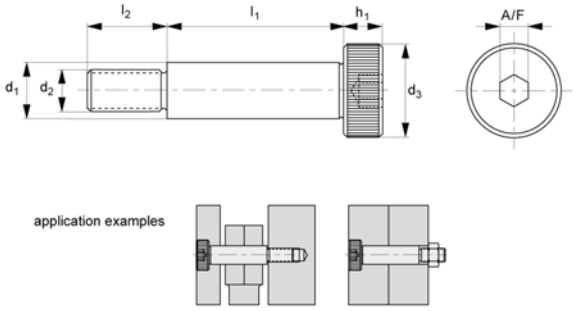

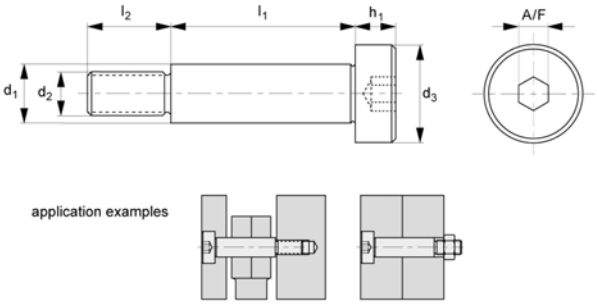



Features

- Shoulder is machined to a precise tolerance and serves as a bearing surface for the screw head.
- Easily tightened or loosened with an Allen wrench or hex key.
- It is somewhat magnetic, strong, and corrosion resistant.

Specifications

Material: Stainless Steel, Black Steel

These Shoulder Screws, also known as shoulder bolts, are a type of fastener with a cylindrical shoulder that separates the screw's head from its threaded part. The shoulder is machined to a precise tolerance and serves as a bearing surface for the screw head.

Shoulder Screws are useful in situations that call for a mounting pin, dowel, joint, shaft, or sliding action. It is somewhat magnetic, strong, and corrosion resistant, but not in very harsh conditions.

This range of Shoulder Screws features a hexagonal socket head, which allows them to be easily tightened or loosened with an Allen wrench or hex key. They also feature a non-smooth head, which aids in gripping. These screws are suitable for electronics, machinery and automotive applications.

Shoulder Screws - Hex Socket Head

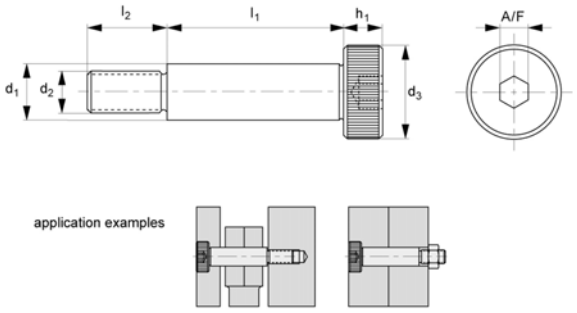

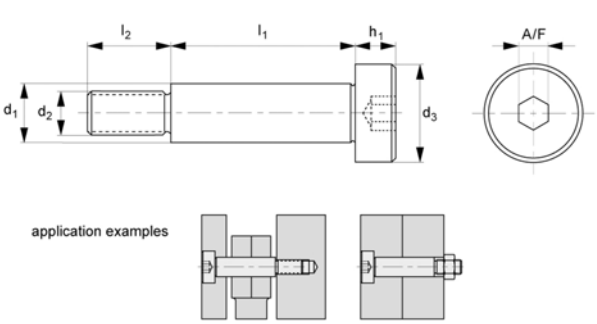



Part Number	d1 tol. f9	d2	D3	H1	l1_025	l2	Material
20220129	4.0	M3	7.0	3.0	5.0	7.0	Black Steel
20220143	4.0	M3	7.0	3.0	8.0	7.0	Black Steel
20220150	4.0	M3	7.0	3.0	10.0	7.0	Black Steel
20220167	4.0	M3	7.0	3.0	12.0	7.0	Black Steel
20220174	4.0	M3	7.0	3.0	16.0	7.0	Black Steel
20220181	4.0	M3	7.0	3.0	20.0	7.0	Black Steel
20223588	4.0	M3	7.0	3.0	25.0	7.0	Black Steel
20226190	4.0	M3	7.0	3.0	30.0	7.0	Black Steel
20220198	5.0	M4	9.0	4.0	6.0	8.0	Black Steel
20220204	5.0	M4	9.0	4.0	8.0	8.0	Black Steel
20220211	5.0	M4	9.0	4.0	10.0	8.0	Black Steel
20220228	5.0	M4	9.0	4.0	12.0	8.0	Black Steel
20220235	5.0	M4	9.0	4.0	16.0	8.0	Black Steel
20220242	5.0	M4	9.0	4.0	20.0	8.0	Black Steel
20226206	5.0	M4	9.0	4.0	25.0	8.0	Black Steel
20226183	5.0	M4	9.0	4.0	30.0	8.0	Black Steel
20220259	6.0	M5	10.0	4.5	6.0	9.5	Black Steel
20220266	6.0	M5	10.0	4.5	8.0	9.5	Black Steel
20220273	6.0	M5	10.0	4.5	12.0	9.5	Black Steel
20220280	6.0	M5	10.0	4.5	16.0	9.5	Black Steel
20220297	6.0	M5	10.0	4.5	20.0	9.5	Black Steel
20220303	6.0	M5	10.0	4.5	25.0	9.5	Black Steel
20220310	6.0	M5	10.0	4.5	30.0	9.5	Black Steel
20223557	6.0	M5	10.0	4.5	35.0	9.5	Black Steel

Shoulder Screws - Hex Socket Head

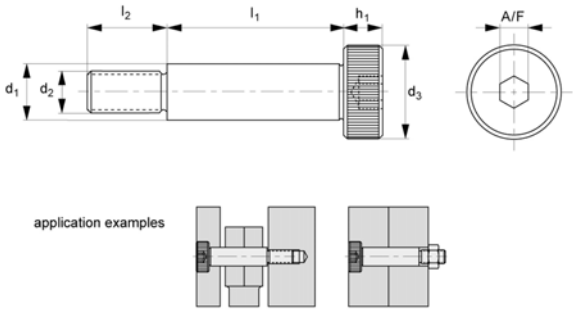

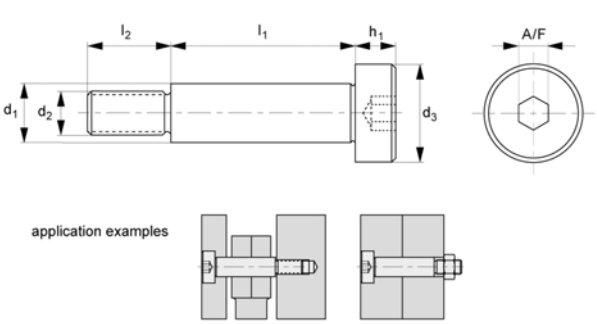



Part Number	d1 tol. f9	d2	D3	H1	l1_025	l2	Material
20220327	6.0	M5	10.0	4.5	40.0	9.5	Black Steel
20225728	6.0	M5	10.0	4.5	45.0	9.5	Black Steel
20222499	6.0	M5	10.0	4.5	50.0	9.5	Black Steel
20226213	6.0	M5	10.0	4.5	55.0	9.5	Black Steel
20226220	6.0	M5	10.0	4.5	60.0	9.5	Black Steel
20226237	6.0	M5	10.0	4.5	65.0	9.5	Black Steel
20226244	6.0	M5	10.0	4.5	70.0	9.5	Black Steel
20226251	6.0	M5	10.0	4.5	75.0	9.5	Black Steel
20226268	6.0	M5	10.0	4.5	80.0	9.5	Black Steel
20226275	6.0	M5	10.0	4.5	90.0	9.5	Black Steel
20226282	6.0	M5	10.0	4.5	100.0	9.5	Black Steel
20220334	8.0	M6	13.0	5.5	10.0	11.0	Black Steel
20220341	8.0	M6	13.0	5.5	16.0	11.0	Black Steel
20220358	8.0	M6	13.0	5.5	20.0	11.0	Black Steel
20220365	8.0	M6	13.0	5.5	25.0	11.0	Black Steel
20220372	8.0	M6	13.0	5.5	30.0	11.0	Black Steel
20226299	8.0	M6	13.0	5.5	35.0	11.0	Black Steel
20220389	8.0	M6	13.0	5.5	40.0	11.0	Black Steel
20226305	8.0	M6	13.0	5.5	45.0	11.0	Black Steel
20220396	8.0	M6	13.0	5.5	50.0	11.0	Black Steel
20226312	8.0	M6	13.0	5.5	55.0	11.0	Black Steel
20226329	8.0	M6	13.0	5.5	60.0	11.0	Black Steel
20226336	8.0	M6	13.0	5.5	65.0	11.0	Black Steel
20225711	8.0	M6	13.0	5.5	70.0	11.0	Black Steel

Shoulder Screws - Hex Socket Head

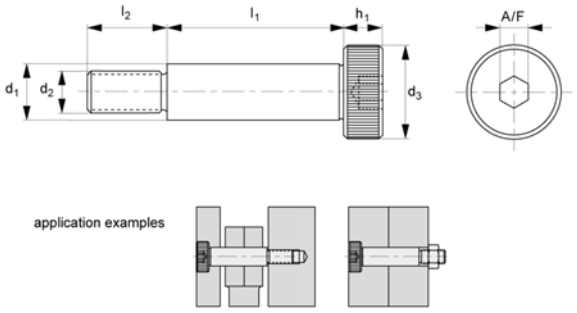

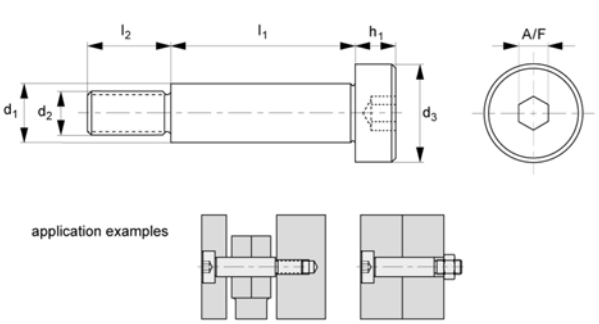



Part Number	d1 tol. f9	d2	D3	H1	l1_025	l2	Material
20226343	8.0	M6	13.0	5.5	75.0	11.0	Black Steel
20226350	8.0	M6	13.0	5.5	80.0	11.0	Black Steel
20226367	8.0	M6	13.0	5.5	90.0	11.0	Black Steel
20226374	8.0	M6	13.0	5.5	100.0	11.0	Black Steel
20220402	10.0	M8	16.0	7.0	10.0	13.0	Black Steel
20220419	10.0	M8	16.0	7.0	12.0	13.0	Black Steel
20220426	10.0	M8	16.0	7.0	16.0	13.0	Black Steel
20220433	10.0	M8	16.0	7.0	20.0	13.0	Black Steel
20220440	10.0	M8	16.0	7.0	30.0	13.0	Black Steel
20225773	10.0	M8	16.0	7.0	35.0	13.0	Black Steel
20220457	10.0	M8	16.0	7.0	40.0	13.0	Black Steel
20226381	10.0	M8	16.0	7.0	45.0	13.0	Black Steel
20220464	10.0	M8	16.0	7.0	50.0	13.0	Black Steel
20226398	10.0	M8	16.0	7.0	55.0	13.0	Black Steel
20220471	10.0	M8	16.0	7.0	60.0	13.0	Black Steel
20223595	10.0	M8	16.0	7.0	65.0	13.0	Black Steel
20220488	10.0	M8	16.0	7.0	70.0	13.0	Black Steel
20226404	10.0	M8	16.0	7.0	75.0	13.0	Black Steel
20220495	10.0	M8	16.0	7.0	80.0	13.0	Black Steel
20226411	10.0	M8	16.0	7.0	90.0	13.0	Black Steel
20223564	10.0	M8	16.0	7.0	100.0	13.0	Black Steel
20226428	10.0	M8	16.0	7.0	120.0	13.0	Black Steel
20220518	12.0	M10	18.0	9.0	12.0	16.0	Black Steel
20220525	12.0	M10	18.0	9.0	16.0	16.0	Black Steel

Shoulder Screws - Hex Socket Head

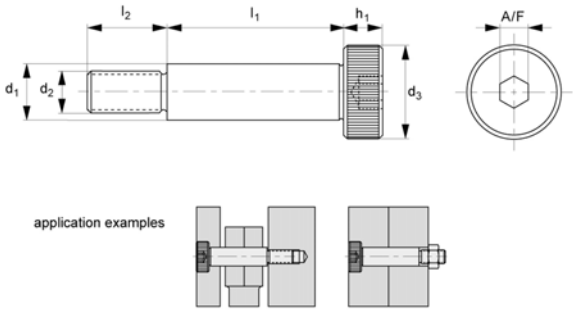

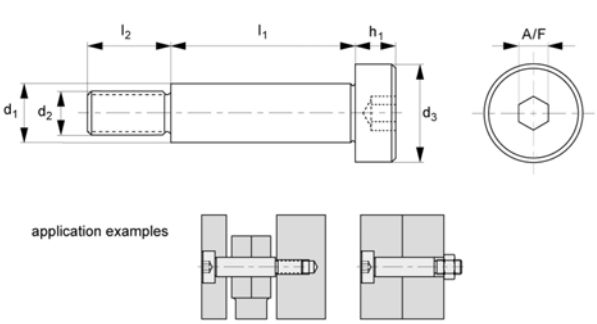



Part Number	d1 tol. f9	d2	D3	H1	l1_025	l2	Material
20220532	12.0	M10	18.0	9.0	20.0	16.0	Black Steel
20220549	12.0	M10	18.0	9.0	25.0	16.0	Black Steel
20220556	12.0	M10	18.0	9.0	30.0	16.0	Black Steel
20226435	12.0	M10	18.0	9.0	35.0	16.0	Black Steel
20220563	12.0	M10	18.0	9.0	40.0	16.0	Black Steel
20226442	12.0	M10	18.0	9.0	45.0	16.0	Black Steel
20220570	12.0	M10	18.0	9.0	50.0	16.0	Black Steel
20226459	12.0	M10	18.0	9.0	55.0	16.0	Black Steel
20220587	12.0	M10	18.0	9.0	60.0	16.0	Black Steel
20226466	12.0	M10	18.0	9.0	65.0	16.0	Black Steel
20220594	12.0	M10	18.0	9.0	70.0	16.0	Black Steel
20226473	12.0	M10	18.0	9.0	75.0	16.0	Black Steel
20220600	12.0	M10	18.0	9.0	80.0	16.0	Black Steel
20220617	12.0	M10	18.0	9.0	90.0	16.0	Black Steel
20220501	12.0	M10	18.0	9.0	100.0	16.0	Black Steel
20226664	12.0	M10	18.0	9.0	110.0	16.0	Black Steel
20220648	16.0	M12	24.0	11.0	20.0	18.0	Black Steel
20220655	16.0	M12	24.0	11.0	25.0	18.0	Black Steel
20220662	16.0	M12	24.0	11.0	30.0	18.0	Black Steel
20226480	16.0	M12	24.0	11.0	35.0	18.0	Black Steel
20220679	16.0	M12	24.0	11.0	40.0	18.0	Black Steel
20226497	16.0	M12	24.0	11.0	45.0	18.0	Black Steel
20220686	16.0	M12	24.0	11.0	50.0	18.0	Black Steel
20226503	16.0	M12	24.0	11.0	55.0	18.0	Black Steel

Shoulder Screws - Hex Socket Head

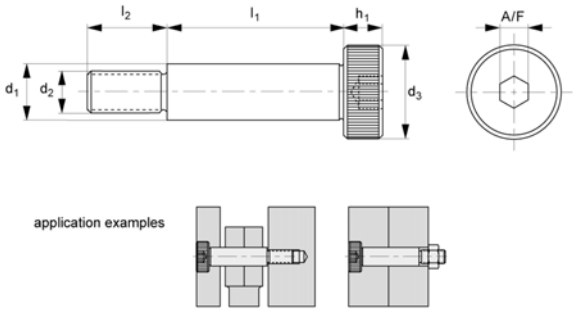

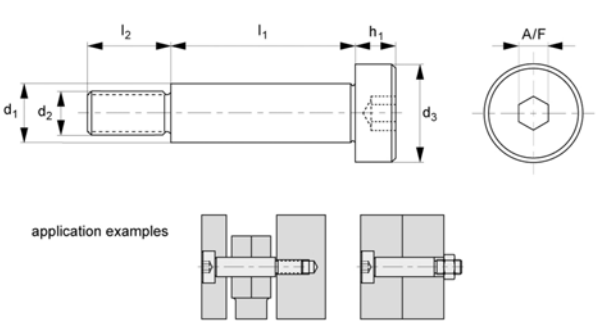



Part Number	d1 tol. f9	d2	D3	H1	l1_025	l2	Material
20220693	16.0	M12	24.0	11.0	60.0	18.0	Black Steel
20226510	16.0	M12	24.0	11.0	65.0	18.0	Black Steel
20220709	16.0	M12	24.0	11.0	70.0	18.0	Black Steel
20226527	16.0	M12	24.0	11.0	75.0	18.0	Black Steel
20220716	16.0	M12	24.0	11.0	80.0	18.0	Black Steel
20220723	16.0	M12	24.0	11.0	90.0	18.0	Black Steel
20220624	16.0	M12	24.0	11.0	100.0	18.0	Black Steel
20220631	16.0	M12	24.0	11.0	120.0	18.0	Black Steel
20220754	20.0	M16	30.0	14.0	20.0	22.0	Black Steel
20226534	20.0	M16	30.0	14.0	25.0	22.0	Black Steel
20220761	20.0	M16	30.0	14.0	30.0	22.0	Black Steel
20226541	20.0	M16	30.0	14.0	35.0	22.0	Black Steel
20220778	20.0	M16	30.0	14.0	40.0	22.0	Black Steel
20226558	20.0	M16	30.0	14.0	45.0	22.0	Black Steel
20220785	20.0	M16	30.0	14.0	50.0	22.0	Black Steel
20226565	20.0	M16	30.0	14.0	55.0	22.0	Black Steel
20220792	20.0	M16	30.0	14.0	60.0	22.0	Black Steel
20226572	20.0	M16	30.0	14.0	65.0	22.0	Black Steel
20220808	20.0	M16	30.0	14.0	70.0	22.0	Black Steel
20226589	20.0	M16	30.0	14.0	75.0	22.0	Black Steel
20220815	20.0	M16	30.0	14.0	80.0	22.0	Black Steel
20220822	20.0	M16	30.0	14.0	90.0	22.0	Black Steel
20220730	20.0	M16	30.0	14.0	100.0	22.0	Black Steel
20220747	20.0	M16	30.0	14.0	120.0	22.0	Black Steel

Shoulder Screws - Hex Socket Head

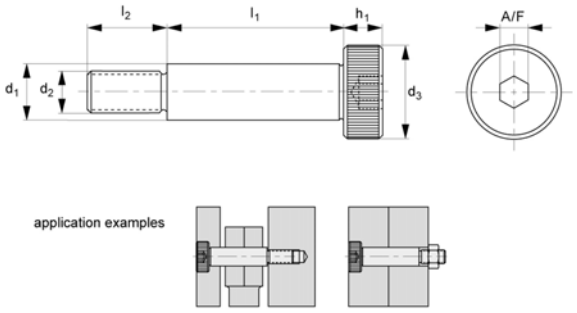

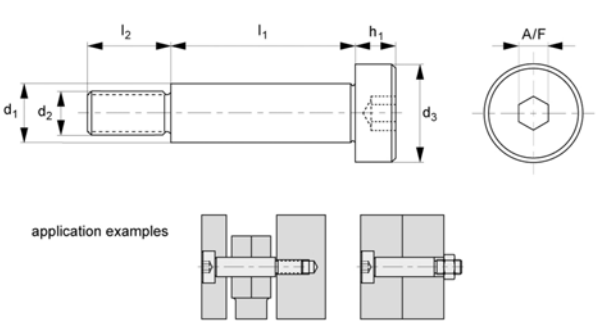



Part Number	d1 tol. f9	d2	D3	H1	l1_025	l2	Material
20220853	24.0	M20	36.0	16.0	20.0	27.0	Black Steel
20226596	24.0	M20	36.0	16.0	25.0	27.0	Black Steel
20220860	24.0	M20	36.0	16.0	30.0	27.0	Black Steel
20226602	24.0	M20	36.0	16.0	35.0	27.0	Black Steel
20220877	24.0	M20	36.0	16.0	40.0	27.0	Black Steel
20226619	24.0	M20	36.0	16.0	45.0	27.0	Black Steel
20220884	24.0	M20	36.0	16.0	50.0	27.0	Black Steel
20226626	24.0	M20	36.0	16.0	55.0	27.0	Black Steel
20220891	24.0	M20	36.0	16.0	60.0	27.0	Black Steel
20226633	24.0	M20	36.0	16.0	65.0	27.0	Black Steel
20220907	24.0	M20	36.0	16.0	70.0	27.0	Black Steel
20226640	24.0	M20	36.0	16.0	75.0	27.0	Black Steel
20220914	24.0	M20	36.0	16.0	80.0	27.0	Black Steel
20220921	24.0	M20	36.0	16.0	90.0	27.0	Black Steel
20220839	24.0	M20	36.0	16.0	100.0	27.0	Black Steel
20220846	24.0	M20	36.0	16.0	120.0	27.0	Black Steel
20229092	5.0	M4	9.0	4.0	6.0	8.0	Stainless Steel
20229108	5.0	M4	9.0	4.0	8.0	8.0	Stainless Steel
20227678	5.0	M4	9.0	4.0	10.0	8.0	Stainless Steel
20229115	5.0	M4	9.0	4.0	12.0	8.0	Stainless Steel
20229122	5.0	M4	9.0	4.0	16.0	8.0	Stainless Steel
20229139	5.0	M4	9.0	4.0	20.0	8.0	Stainless Steel
20229146	5.0	M4	9.0	4.0	25.0	8.0	Stainless Steel
20229153	5.0	M4	9.0	4.0	30.0	8.0	Stainless Steel

Shoulder Screws - Hex Socket Head

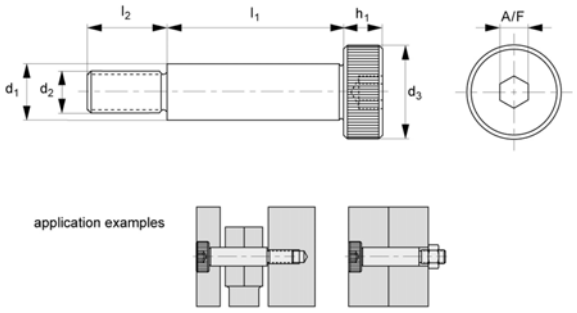

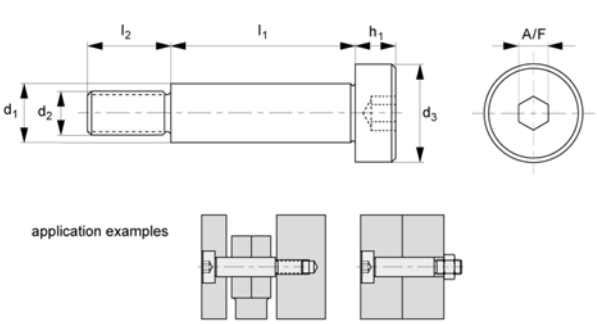



Part Number	d1 tol. f9	d2	D3	H1	l1_025	l2	Material
20229160	6.0	M5	10.0	4.5	6.0	9.5	Stainless Steel
20220938	6.0	M5	10.0	4.5	8.0	9.5	Stainless Steel
20220945	6.0	M5	10.0	4.5	10.0	9.5	Stainless Steel
20220952	6.0	M5	10.0	4.5	12.0	9.5	Stainless Steel
20220969	6.0	M5	10.0	4.5	16.0	9.5	Stainless Steel
20220976	6.0	M5	10.0	4.5	20.0	9.5	Stainless Steel
20220983	6.0	M5	10.0	4.5	25.0	9.5	Stainless Steel
20220990	6.0	M5	10.0	4.5	30.0	9.5	Stainless Steel
20228187	6.0	M5	10.0	4.5	35.0	9.5	Stainless Steel
20221003	6.0	M5	10.0	4.5	40.0	9.5	Stainless Steel
20229177	6.0	M5	10.0	4.5	45.0	9.5	Stainless Steel
20221010	6.0	M5	10.0	4.5	50.0	9.5	Stainless Steel
20229184	6.0	M5	10.0	4.5	55.0	9.5	Stainless Steel
20227180	6.0	M5	10.0	4.5	60.0	9.5	Stainless Steel
20229191	6.0	M5	10.0	4.5	65.0	9.5	Stainless Steel
20229207	6.0	M5	10.0	4.5	70.0	9.5	Stainless Steel
20229214	6.0	M5	10.0	4.5	75.0	9.5	Stainless Steel
20229832	6.0	M5	10.0	4.5	80.0	9.5	Stainless Steel
20229221	6.0	M5	10.0	4.5	90.0	9.5	Stainless Steel
20229238	6.0	M5	10.0	4.5	100.0	9.5	Stainless Steel
20221027	8.0	M6	13.0	5.5	8.0	11.0	Stainless Steel
20221034	8.0	M6	13.0	5.5	10.0	11.0	Stainless Steel
20221041	8.0	M6	13.0	5.5	12.0	11.0	Stainless Steel
20223533	8.0	M6	13.0	5.5	16.0	11.0	Stainless Steel

Shoulder Screws - Hex Socket Head

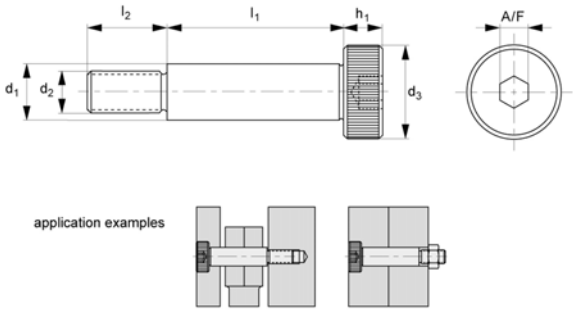

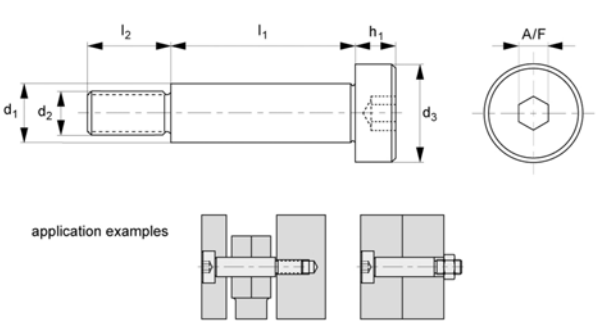



Part Number	d1 tol. f9	d2	D3	H1	l1_025	l2	Material
20223519	8.0	M6	13.0	5.5	20.0	11.0	Stainless Steel
20221058	8.0	M6	13.0	5.5	25.0	11.0	Stainless Steel
20221065	8.0	M6	13.0	5.5	30.0	11.0	Stainless Steel
20228194	8.0	M6	13.0	5.5	35.0	11.0	Stainless Steel
20221072	8.0	M6	13.0	5.5	40.0	11.0	Stainless Steel
20229245	8.0	M6	13.0	5.5	45.0	11.0	Stainless Steel
20221089	8.0	M6	13.0	5.5	50.0	11.0	Stainless Steel
20229252	8.0	M6	13.0	5.5	55.0	11.0	Stainless Steel
20229269	8.0	M6	13.0	5.5	60.0	11.0	Stainless Steel
20229276	8.0	M6	13.0	5.5	65.0	11.0	Stainless Steel
20229283	8.0	M6	13.0	5.5	70.0	11.0	Stainless Steel
20229290	8.0	M6	13.0	5.5	75.0	11.0	Stainless Steel
20229306	8.0	M6	13.0	5.5	80.0	11.0	Stainless Steel
20229313	8.0	M6	13.0	5.5	90.0	11.0	Stainless Steel
20229320	8.0	M6	13.0	5.5	100.0	11.0	Stainless Steel
20221096	10.0	M8	16.0	7.0	10.0	13.0	Stainless Steel
20221102	10.0	M8	16.0	7.0	12.0	13.0	Stainless Steel
20221119	10.0	M8	16.0	7.0	16.0	13.0	Stainless Steel
20229337	10.0	M8	16.0	7.0	20.0	13.0	Stainless Steel
20229344	10.0	M8	16.0	7.0	25.0	13.0	Stainless Steel
20229351	10.0	M8	16.0	7.0	30.0	13.0	Stainless Steel
20229368	10.0	M8	16.0	7.0	35.0	13.0	Stainless Steel
20229375	10.0	M8	16.0	7.0	40.0	13.0	Stainless Steel
20229382	10.0	M8	16.0	7.0	45.0	13.0	Stainless Steel

Shoulder Screws - Hex Socket Head

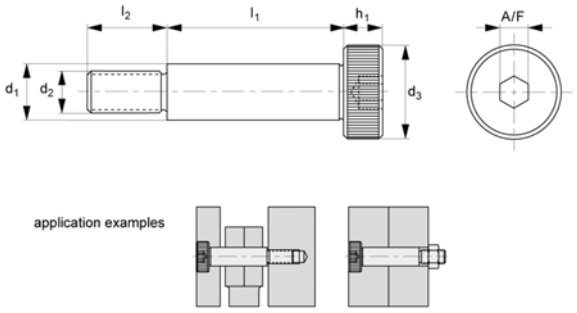

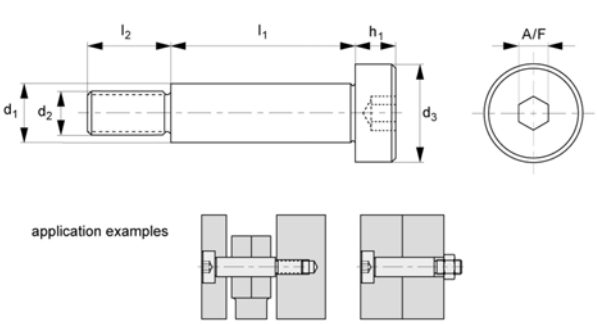



Part Number	d1 tol. f9	d2	D3	H1	l1_025	l2	Material
20228651	10.0	M8	16.0	7.0	50.0	13.0	Stainless Steel
20229399	10.0	M8	16.0	7.0	55.0	13.0	Stainless Steel
20229405	10.0	M8	16.0	7.0	60.0	13.0	Stainless Steel
20229412	10.0	M8	16.0	7.0	65.0	13.0	Stainless Steel
20228668	10.0	M8	16.0	7.0	70.0	13.0	Stainless Steel
20229429	10.0	M8	16.0	7.0	75.0	13.0	Stainless Steel
20229436	10.0	M8	16.0	7.0	80.0	13.0	Stainless Steel
20229443	10.0	M8	16.0	7.0	90.0	13.0	Stainless Steel
20229450	10.0	M8	16.0	7.0	100.0	13.0	Stainless Steel
20221126	12.0	M10	18.0	9.0	16.0	16.0	Stainless Steel
20221133	12.0	M10	18.0	9.0	20.0	16.0	Stainless Steel
20221140	12.0	M10	18.0	9.0	25.0	16.0	Stainless Steel
20221157	12.0	M10	18.0	9.0	30.0	16.0	Stainless Steel
20227746	12.0	M10	18.0	9.0	35.0	16.0	Stainless Steel
20221164	12.0	M10	18.0	9.0	40.0	16.0	Stainless Steel
20228200	12.0	M10	18.0	9.0	45.0	16.0	Stainless Steel
20221171	12.0	M10	18.0	9.0	50.0	16.0	Stainless Steel
20229467	12.0	M10	18.0	9.0	55.0	16.0	Stainless Steel
20229474	12.0	M10	18.0	9.0	60.0	16.0	Stainless Steel
20229481	12.0	M10	18.0	9.0	65.0	16.0	Stainless Steel
20229498	12.0	M10	18.0	9.0	70.0	16.0	Stainless Steel
20229504	12.0	M10	18.0	9.0	75.0	16.0	Stainless Steel
20229511	12.0	M10	18.0	9.0	80.0	16.0	Stainless Steel
20229528	12.0	M10	18.0	9.0	90.0	16.0	Stainless Steel

Shoulder Screws - Hex Socket Head

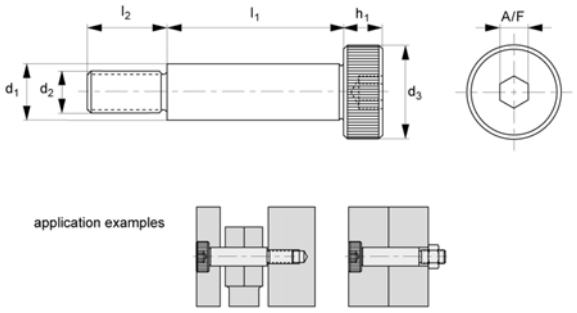

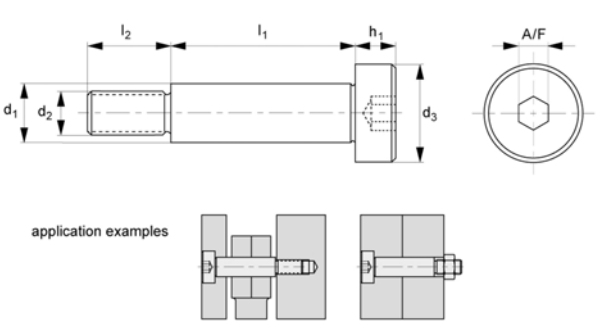



Part Number	d1 tol. f9	d2	D3	H1	l1_025	l2	Material
20229535	12.0	M10	18.0	9.0	100.0	16.0	Stainless Steel
20229054	16.0	M12	24.0	11.0	25.0	18.0	Stainless Steel
20229559	16.0	M12	24.0	11.0	30.0	18.0	Stainless Steel
20229566	16.0	M12	24.0	11.0	35.0	18.0	Stainless Steel
20229573	16.0	M12	24.0	11.0	40.0	18.0	Stainless Steel
20229580	16.0	M12	24.0	11.0	45.0	18.0	Stainless Steel
20229597	16.0	M12	24.0	11.0	50.0	18.0	Stainless Steel
20229603	16.0	M12	24.0	11.0	55.0	18.0	Stainless Steel
20229610	16.0	M12	24.0	11.0	60.0	18.0	Stainless Steel
20229627	16.0	M12	24.0	11.0	65.0	18.0	Stainless Steel
20229634	16.0	M12	24.0	11.0	70.0	18.0	Stainless Steel
20229641	16.0	M12	24.0	11.0	75.0	18.0	Stainless Steel
20229658	16.0	M12	24.0	11.0	80.0	18.0	Stainless Steel
20229665	16.0	M12	24.0	11.0	90.0	18.0	Stainless Steel
20229672	16.0	M12	24.0	11.0	100.0	18.0	Stainless Steel
20229689	20.0	M16	30.0	14.0	30.0	22.0	Stainless Steel
20229696	20.0	M16	30.0	14.0	35.0	22.0	Stainless Steel
20229702	20.0	M16	30.0	14.0	40.0	22.0	Stainless Steel
20229719	20.0	M16	30.0	14.0	45.0	22.0	Stainless Steel
20229726	20.0	M16	30.0	14.0	50.0	22.0	Stainless Steel
20229733	20.0	M16	30.0	14.0	55.0	22.0	Stainless Steel
20229740	20.0	M16	30.0	14.0	60.0	22.0	Stainless Steel
20229757	20.0	M16	30.0	14.0	65.0	22.0	Stainless Steel
20229764	20.0	M16	30.0	14.0	70.0	22.0	Stainless Steel

Shoulder Screws - Hex Socket Head

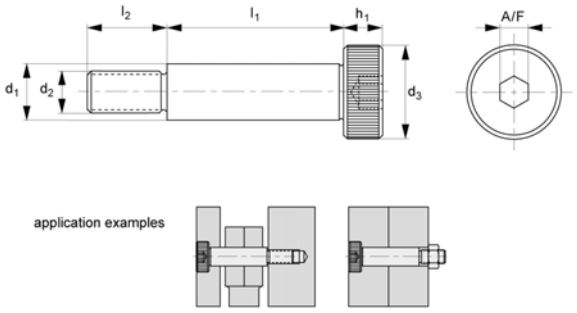

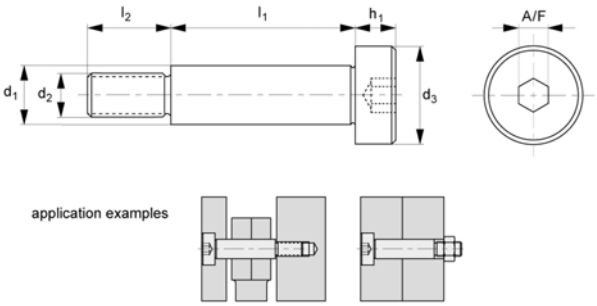



Part Number	d1 tol. f9	d2	D3	H1	l1_025	l2	Material
20229771	20.0	M16	30.0	14.0	75.0	22.0	Stainless Steel
20229788	20.0	M16	30.0	14.0	80.0	22.0	Stainless Steel
20229795	20.0	M16	30.0	14.0	90.0	22.0	Stainless Steel
20229801	20.0	M16	30.0	14.0	100.0	22.0	Stainless Steel
20229818	20.0	M16	30.0	14.0	120.0	22.0	Stainless Steel
20229825	20.0	M16	30.0	14.0	140.0	22.0	Stainless Steel

Shoulder Screws - Pan Head

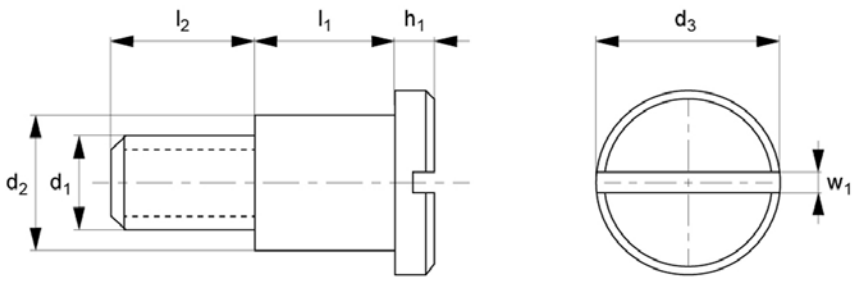



Features

- It is sturdy and corrosion-resistant, but not in really hard conditions.
- It has a pan head that is slightly domed and a flat bearing.
- It is suited for low-profile applications and has an aesthetically attractive appearance.

Specifications

Material: 303 Stainless Steel

These Pan Head Shoulder Screws, also known as pan head shoulder bolts, are a type of fastener that consists of a cylindrical shaft with a pan head at one end and a shoulder at the other. The shoulder is machined to a precise tolerance and serves as a bearing surface for the screw head.

Shoulder Screws are useful when a mounting pin, dowel, joint, shaft, or sliding motion is required. It is sturdy and corrosion-resistant, but not in really hard conditions.

This range of Shoulder Screws features a pan head that is slightly domed and a flat bearing. It is suited for low-profile applications and has an aesthetically attractive appearance. Easy to install or remove using slotted screwdrivers. These screws suit electronics, medical devices, machinery and automotive applications.

Shoulder Screws - Pan Head

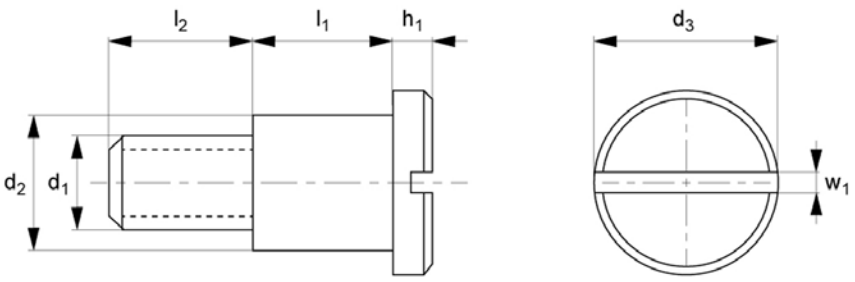



Part Number	d1	l1	d2 tol. H9	D3	l2	H1	w1
20223106	M3	3.0	4.0	7.0	4.5	1.8	0.8
20223113	M3	4.0	4.0	7.0	4.5	1.8	0.8
20223120	M3	5.0	4.0	7.0	4.5	1.8	0.8
20223137	M3	6.0	4.0	7.0	4.5	1.8	0.8
20223144	M3	8.0	4.0	7.0	4.5	1.8	0.8
20227197	M3	10.0	4.0	7.0	4.5	1.8	0.8
20227098	M3	12.0	4.0	7.0	4.5	1.8	0.8
20223151	M4	3.0	5.5	8.5	6.0	2.4	1.0
20223168	M4	4.0	5.5	8.5	6.0	2.4	1.0
20223175	M4	5.0	5.5	8.5	6.0	2.4	1.0
20223182	M4	6.0	5.5	8.5	6.0	2.4	1.0
20223199	M4	8.0	5.5	8.5	6.0	2.4	1.0
20223205	M4	10.0	5.5	8.5	6.0	2.4	1.0
20223212	M4	12.0	5.5	8.5	6.0	2.4	1.0
20223373	M4	16.0	5.5	8.5	6.0	2.4	1.0
20223380	M4	20.0	5.5	8.5	6.0	2.4	1.0
20223229	M5	3.0	7.0	11.0	7.0	2.7	1.2
20223236	M5	4.0	7.0	11.0	7.0	2.7	1.2
20223243	M5	5.0	7.0	11.0	7.0	2.7	1.2
20223250	M5	6.0	7.0	11.0	7.0	2.7	1.2
20223267	M5	8.0	7.0	11.0	7.0	2.7	1.2
20223274	M5	10.0	7.0	11.0	7.0	2.7	1.2
20223281	M5	12.0	7.0	11.0	7.0	2.7	1.2

Shoulder Screws - Pan Head

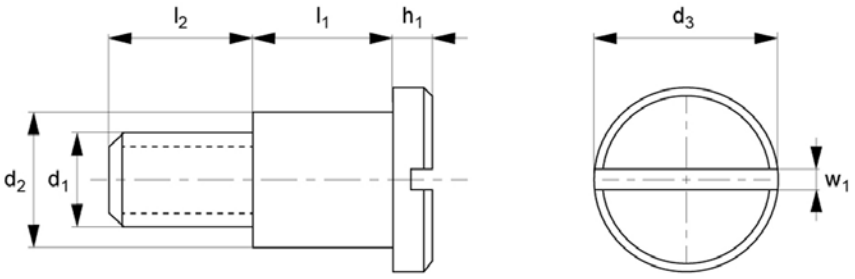



Part Number	d1	l1	d2 tol. H9	D3	l2	H1	w1
20223298	M5	16.0	7.0	11.0	7.0	2.7	1.2
20223397	M5	20.0	7.0	11.0	7.0	2.7	1.2
20223304	M6	3.0	8.0	13.0	9.0	3.1	1.6
20223311	M6	4.0	8.0	13.0	9.0	3.1	1.6
20223328	M6	5.0	8.0	13.0	9.0	3.1	1.6
20223335	M6	6.0	8.0	13.0	9.0	3.1	1.6
20223342	M6	8.0	8.0	13.0	9.0	3.1	1.6
20223359	M6	10.0	8.0	13.0	9.0	3.1	1.6
20223366	M6	12.0	8.0	13.0	9.0	3.1	1.6
20223403	M6	16.0	8.0	13.0	9.0	3.1	1.6
20223410	M6	20.0	8.0	13.0	9.0	3.1	1.6
20223427	M8	6.0	10.0	16.0	11.0	3.8	2.0
20223434	M8	8.0	10.0	16.0	11.0	3.8	2.0
20223441	M8	10.0	10.0	16.0	11.0	3.8	2.0
20223458	M8	12.0	10.0	16.0	11.0	3.8	2.0
20223465	M8	16.0	10.0	16.0	11.0	3.8	2.0
20223472	M8	20.0	10.0	16.0	11.0	3.8	2.0

Shoulder Screws - Slot Head

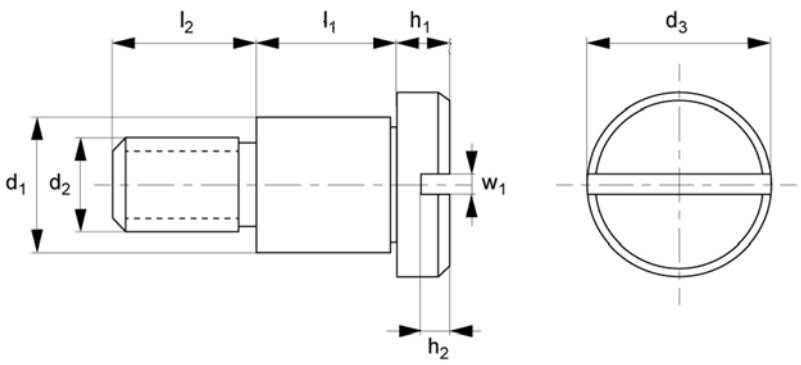



Features

- Shoulder that runs from the head to the shank which is machined to a precise tolerance.
- It features a slotted head, which allows them to be driven with a slotted screwdriver.
- Magnetic and excellent shear resistance, although they corrode somewhat more easily than conventional shoulder screws.

Specifications

Material: Stainless Steel

These Shoulder Screws, often known as shoulder bolts, are a kind of fastener having a cylindrical head and a threaded shank. They feature a shoulder that runs from the head to the shank which is machined to a precise tolerance. Shoulder screws are commonly used to connect two components, with the shoulder acting as a bearing surface.

Shoulder Screws are appropriate for applications requiring a mounting pin, dowel, joint, shaft, or sliding motion.

This range of Shoulder Screws features a slotted head, which allows them to be driven with a slotted screwdriver. They are magnetic and have excellent shear resistance, although they corrode somewhat more easily than conventional shoulder screws. These screws are suitable for electronics, machinery, automotive and construction applications.

Shoulder Screws - Slot Head

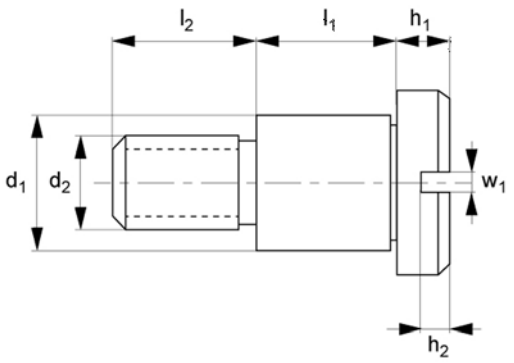



Part Number	d1	l1	d2	D3	l2	H1	h2
20221188	4.0	4.0	M3	6.0	4.0	3.0	0.3
20221393	4.0	5.0	M3	6.0	4.0	3.0	0.3
20221607	4.0	6.0	M3	6.0	4.0	3.0	0.3
20221782	4.0	8.0	M3	6.0	4.0	3.0	0.3
20221904	4.0	10.0	M3	6.0	4.0	3.0	0.3
20221928	5.0	4.0	M4	8.0	5.0	4.0	0.9
20221942	5.0	5.0	M4	8.0	5.0	4.0	0.9
20221966	5.0	6.0	M4	8.0	5.0	4.0	0.9
20221980	5.0	8.0	M4	8.0	5.0	4.0	0.9
20221201	5.0	10.0	M4	8.0	5.0	4.0	0.9
20221225	5.0	12.0	M4	8.0	5.0	4.0	0.9
20221249	5.0	14.0	M4	8.0	5.0	4.0	0.9
20221263	5.0	16.0	M4	8.0	5.0	4.0	0.9
20221287	5.0	20.0	M4	8.0	5.0	4.0	0.9
20221317	5.0	30.0	M4	8.0	5.0	4.0	0.9
20221331	6.0	4.0	M5	10.0	6.0	5.0	1.2
20221355	6.0	5.0	M5	10.0	6.0	5.0	1.2
20221379	6.0	6.0	M5	10.0	6.0	5.0	1.2
20221416	6.0	8.0	M5	10.0	6.0	5.0	1.2
20221430	6.0	10.0	M5	10.0	6.0	5.0	1.2
20221461	6.0	14.0	M5	10.0	6.0	5.0	1.2
20221485	6.0	16.0	M5	10.0	6.0	5.0	1.2

Shoulder Screws - Slot Head

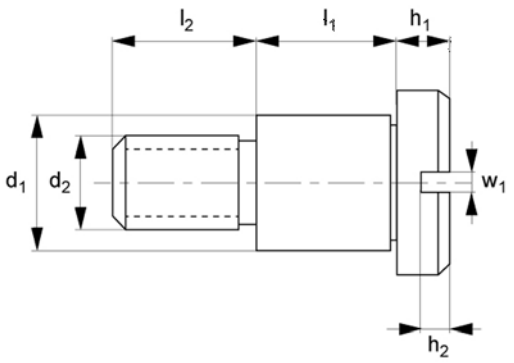



Part Number	d1	l1	d2	D3	l2	H1	h2
20221508	6.0	20.0	M5	10.0	6.0	5.0	1.2
20221522	6.0	25.0	M5	10.0	6.0	5.0	1.2
20221546	6.0	30.0	M5	10.0	6.0	5.0	1.2
20221560	8.0	6.0	M6	12.0	11.0	6.0	1.3
20221584	8.0	8.0	M6	12.0	11.0	6.0	1.3
20221621	8.0	10.0	M6	12.0	11.0	6.0	1.3
20221645	8.0	12.0	M6	12.0	11.0	6.0	1.3
20221669	8.0	16.0	M6	12.0	11.0	6.0	1.3
20221690	10.0	8.0	M6	12.0	11.0	6.0	1.5
20221720	10.0	12.0	M6	12.0	11.0	6.0	1.5
20221744	10.0	16.0	M6	12.0	11.0	6.0	1.5
20221843	12.0	12.0	M10	20.0	16.0	8.0	2.4
20221867	12.0	16.0	M10	20.0	16.0	8.0	2.4
20221881	12.0	26.0	M10	20.0	16.0	8.0	2.4

Shoulder Bolts - Hex Head

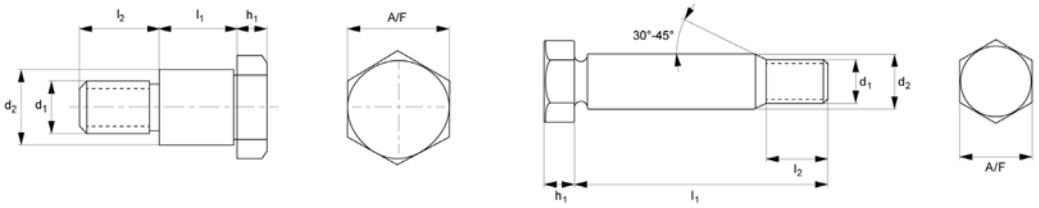



Features

- This shoulder part is machined to a precise tolerance for locating, fastening, or rotating parts.
- Its hexagonal-shaped head offers a comfortable and stable grip for tightening and loosening the bolt.
- It is durable, corrosion-resistant, and nonmagnetic.

Specifications

Material: 303 Stainless Steel, Steel

These Shoulder bolts, also known as shoulder screws, are a type of fastener with a plain section shoulder in between the head and threaded portion of the screw. The shoulder part is machined to a precise tolerance for locating, fastening, or rotating parts.

It decreases stress concentration and lowers the likelihood of damage or failure. It is also durable, corrosion-resistant, and nonmagnetic. It can handle high loads, vibrations, and harsh environments.

Its hexagonal-shaped head offers a comfortable and stable grip for tightening and loosening the bolt. The hex head shape enables simple torque application with a wrench or socket, delivering a tight and solid connection. It is widely utilised in various sectors, including automotive, industrial, electronics, and construction.

Shoulder Bolts - Hex Head

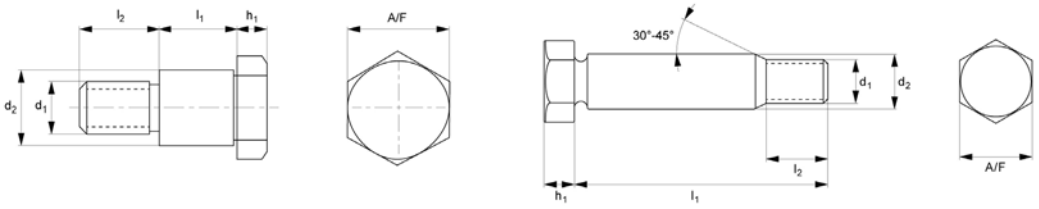



Part Number	Type	d1	d2	l1	l2	H1	Material
20255589	Standard Thread	M8	9.0	25.0	14.5	5.3	Steel
20255596	Standard Thread	M8	9.0	32.0	14.5	5.3	Steel
20255602	Standard Thread	M8	9.0	35.0	14.5	5.3	Steel
20258771	Standard Thread	M8	9.0	38.0	14.5	5.3	Steel
20255619	Standard Thread	M8	9.0	40.0	14.5	5.3	Steel
20258719	Standard Thread	M8	9.0	42.0	14.5	5.3	Steel
20255626	Standard Thread	M8	9.0	45.0	14.5	5.3	Steel
20258788	Standard Thread	M8	9.0	48.0	14.5	5.3	Steel
20255633	Standard Thread	M8	9.0	50.0	14.5	5.3	Steel
20256500	Standard Thread	M8	9.0	55.0	16.5	5.3	Steel
20256517	Standard Thread	M8	9.0	60.0	16.5	5.3	Steel
20256524	Standard Thread	M8	9.0	65.0	16.5	5.3	Steel
20256531	Standard Thread	M8	9.0	70.0	16.5	5.3	Steel
20256548	Standard Thread	M8	9.0	80.0	16.5	5.3	Steel
20255640	Standard Thread	M10	11.0	30.0	17.5	6.4	Steel
20258795	Standard Thread	M10	11.0	32.0	17.5	6.4	Steel
20255657	Standard Thread	M10	11.0	35.0	17.5	6.4	Steel
20258801	Standard Thread	M10	11.0	38.0	17.5	6.4	Steel
20255664	Standard Thread	M10	11.0	40.0	17.5	6.4	Steel
20258818	Standard Thread	M10	11.0	42.0	17.5	6.4	Steel
20255671	Standard Thread	M10	11.0	45.0	17.5	6.4	Steel
20258825	Standard Thread	M10	11.0	48.0	17.5	6.4	Steel
20255688	Standard Thread	M10	11.0	50.0	17.5	6.4	Steel
20255695	Standard Thread	M10	11.0	55.0	19.5	6.4	Steel
20255701	Standard Thread	M10	11.0	60.0	19.5	6.4	Steel
20256555	Standard Thread	M10	11.0	65.0	19.5	6.4	Steel

Shoulder Bolts - Hex Head

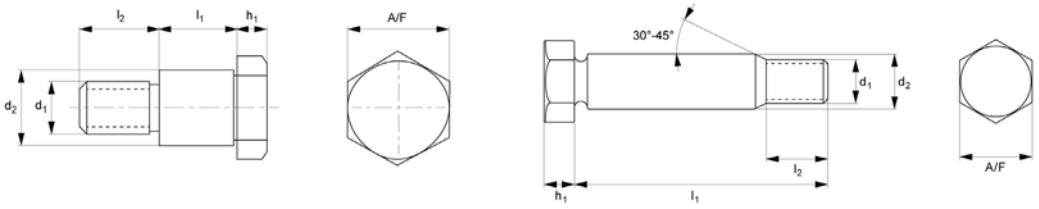



Part Number	Type	d1	d2	l1	l2	H1	Material
20256562	Standard Thread	M10	11.0	70.0	19.5	6.4	Steel
20256579	Standard Thread	M10	11.0	75.0	19.5	6.4	Steel
20256586	Standard Thread	M10	11.0	80.0	19.5	6.4	Steel
20256593	Standard Thread	M10	11.0	85.0	19.5	6.4	Steel
20256609	Standard Thread	M10	11.0	90.0	19.5	6.4	Steel
20256616	Standard Thread	M10	11.0	100.0	19.5	6.4	Steel
20258832	Standard Thread	M12	13.0	30.0	20.5	7.5	Steel
20258849	Standard Thread	M12	13.0	32.0	20.5	7.5	Steel
20255718	Standard Thread	M12	13.0	35.0	20.5	7.5	Steel
20258856	Standard Thread	M12	13.0	38.0	20.5	7.5	Steel
20255725	Standard Thread	M12	13.0	40.0	20.5	7.5	Steel
20258863	Standard Thread	M12	13.0	42.0	20.5	7.5	Steel
20255732	Standard Thread	M12	13.0	45.0	20.5	7.5	Steel
20258870	Standard Thread	M12	13.0	48.0	20.5	7.5	Steel
20255749	Standard Thread	M12	13.0	50.0	20.5	7.5	Steel
20255756	Standard Thread	M12	13.0	55.0	22.5	7.5	Steel
20255763	Standard Thread	M12	13.0	60.0	22.5	7.5	Steel
20258887	Standard Thread	M12	13.0	65.0	22.5	7.5	Steel
20255770	Standard Thread	M12	13.0	70.0	22.5	7.5	Steel
20255787	Standard Thread	M12	13.0	75.0	22.5	7.5	Steel
20256623	Standard Thread	M12	13.0	80.0	22.5	7.5	Steel
20258894	Standard Thread	M12	13.0	85.0	22.5	7.5	Steel
20256630	Standard Thread	M12	13.0	90.0	22.5	7.5	Steel
20258900	Standard Thread	M12	13.0	95.0	22.5	7.5	Steel
20256647	Standard Thread	M12	13.0	100.0	22.5	7.5	Steel
20255794	Standard Thread	M14	15.0	35.0	22.0	8.8	Steel

Shoulder Bolts - Hex Head

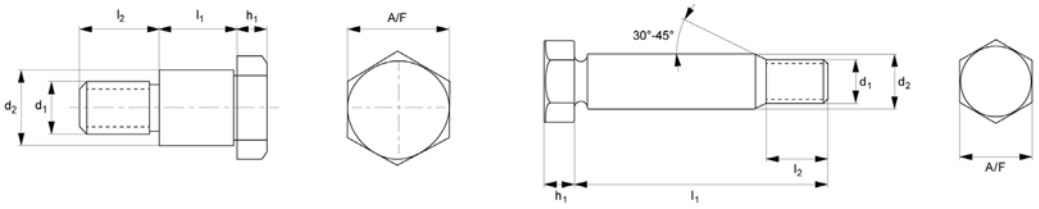



Part Number	Type	d1	d2	l1	l2	H1	Material
20255800	Standard Thread	M14	15.0	40.0	22.0	8.8	Steel
20258917	Standard Thread	M14	15.0	42.0	22.0	8.8	Steel
20255817	Standard Thread	M14	15.0	45.0	22.0	8.8	Steel
20255824	Standard Thread	M14	15.0	50.0	22.0	8.8	Steel
20255831	Standard Thread	M14	15.0	55.0	24.0	8.8	Steel
20255848	Standard Thread	M14	15.0	60.0	24.0	8.8	Steel
20258924	Standard Thread	M14	15.0	65.0	24.0	8.8	Steel
20258931	Standard Thread	M14	15.0	70.0	24.0	8.8	Steel
20258948	Standard Thread	M14	15.0	75.0	24.0	8.8	Steel
20256654	Standard Thread	M14	15.0	80.0	24.0	8.8	Steel
20258955	Standard Thread	M14	15.0	90.0	24.0	8.8	Steel
20255886	Standard Thread	M16	17.0	40.0	25.0	10.0	Steel
20258962	Standard Thread	M16	17.0	42.0	25.0	10.0	Steel
20255893	Standard Thread	M16	17.0	45.0	25.0	10.0	Steel
20258979	Standard Thread	M16	17.0	48.0	25.0	10.0	Steel
20255909	Standard Thread	M16	17.0	50.0	25.0	10.0	Steel
20257729	Standard Thread	M16	17.0	55.0	27.0	10.0	Steel
20255916	Standard Thread	M16	17.0	60.0	27.0	10.0	Steel
20258986	Standard Thread	M16	17.0	65.0	27.0	10.0	Steel
20255923	Standard Thread	M16	17.0	70.0	27.0	10.0	Steel
20258993	Standard Thread	M16	17.0	75.0	27.0	10.0	Steel
20255930	Standard Thread	M16	17.0	80.0	27.0	10.0	Steel
20259006	Standard Thread	M16	17.0	85.0	27.0	10.0	Steel
20255947	Standard Thread	M16	17.0	90.0	27.0	10.0	Steel
20255855	Standard Thread	M16	17.0	100.0	27.0	10.0	Steel
20259013	Standard Thread	M16	17.0	105.0	27.0	10.0	Steel

Shoulder Bolts - Hex Head

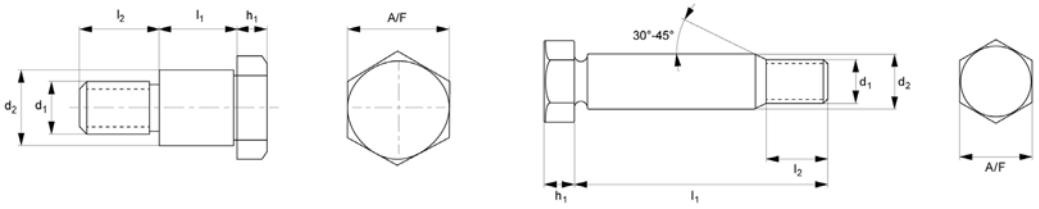



Part Number	Type	d1	d2	l1	l2	H1	Material
20255862	Standard Thread	M16	17.0	110.0	27.0	10.0	Steel
20259020	Standard Thread	M16	17.0	115.0	27.0	10.0	Steel
20255879	Standard Thread	M16	17.0	120.0	27.0	10.0	Steel
20259037	Standard Thread	M16	17.0	125.0	27.0	10.0	Steel
20256661	Standard Thread	M16	17.0	130.0	27.0	10.0	Steel
20259044	Standard Thread	M16	17.0	135.0	27.0	10.0	Steel
20259051	Standard Thread	M16	17.0	140.0	27.0	10.0	Steel
20256678	Standard Thread	M16	17.0	150.0	27.0	10.0	Steel
20256685	Standard Thread	M16	17.0	160.0	27.0	10.0	Steel
20259068	Standard Thread	M16	17.0	180.0	27.0	10.0	Steel
20256692	Standard Thread	M16	17.0	200.0	27.0	10.0	Steel
20256708	Standard Thread	M18	19.0	45.0	27.5	11.5	Steel
20256715	Standard Thread	M18	19.0	50.0	27.5	11.5	Steel
20259075	Standard Thread	M18	19.0	55.0	29.5	11.5	Steel
20256722	Standard Thread	M18	19.0	60.0	29.5	11.5	Steel
20256739	Standard Thread	M18	19.0	70.0	29.5	11.5	Steel
20256746	Standard Thread	M18	19.0	75.0	29.5	11.5	Steel
20256753	Standard Thread	M18	19.0	80.0	29.5	11.5	Steel
20259082	Standard Thread	M18	19.0	85.0	29.5	11.5	Steel
20256760	Standard Thread	M18	19.0	90.0	29.5	11.5	Steel
20256777	Standard Thread	M18	19.0	100.0	29.5	11.5	Steel
20256784	Standard Thread	M18	19.0	110.0	29.5	11.5	Steel
20256791	Standard Thread	M18	19.0	120.0	29.5	11.5	Steel
20256012	Standard Thread	M20	21.0	45.0	28.5	12.5	Steel
20256029	Standard Thread	M20	21.0	50.0	28.5	12.5	Steel
20259099	Standard Thread	M20	21.0	55.0	30.5	12.5	Steel

Shoulder Bolts - Hex Head

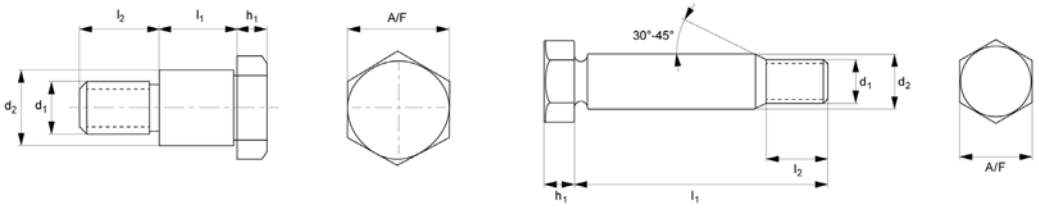



Part Number	Type	d1	d2	l1	l2	H1	Material
20256036	Standard Thread	M20	21.0	60.0	30.5	12.5	Steel
20259105	Standard Thread	M20	21.0	65.0	30.5	12.5	Steel
20256043	Standard Thread	M20	21.0	70.0	30.5	12.5	Steel
20259112	Standard Thread	M20	21.0	75.0	30.5	12.5	Steel
20256050	Standard Thread	M20	21.0	80.0	30.5	12.5	Steel
20259129	Standard Thread	M20	21.0	85.0	30.5	12.5	Steel
20256067	Standard Thread	M20	21.0	90.0	30.5	12.5	Steel
20255954	Standard Thread	M20	21.0	100.0	30.5	12.5	Steel
20259136	Standard Thread	M20	21.0	105.0	30.5	12.5	Steel
20255961	Standard Thread	M20	21.0	110.0	30.5	12.5	Steel
20259143	Standard Thread	M20	21.0	115.0	30.5	12.5	Steel
20255978	Standard Thread	M20	21.0	120.0	30.5	12.5	Steel
20259808	Standard Thread	M20	21.0	125.0	30.5	12.5	Steel
20255985	Standard Thread	M20	21.0	130.0	30.5	12.5	Steel
20259150	Standard Thread	M20	21.0	135.0	30.5	12.5	Steel
20255992	Standard Thread	M20	21.0	140.0	30.5	12.5	Steel
20259167	Standard Thread	M20	21.0	145.0	30.5	12.5	Steel
20256005	Standard Thread	M20	21.0	150.0	30.5	12.5	Steel
20256807	Standard Thread	M20	21.0	160.0	35.5	12.5	Steel
20259174	Standard Thread	M20	21.0	170.0	35.5	12.5	Steel
20256814	Standard Thread	M20	21.0	180.0	35.5	12.5	Steel
20259181	Standard Thread	M20	21.0	190.0	35.5	12.5	Steel
20256821	Standard Thread	M20	21.0	200.0	35.5	12.5	Steel
20256838	Standard Thread	M20	21.0	220.0	35.5	12.5	Steel
20256845	Standard Thread	M20	21.0	240.0	35.5	12.5	Steel
20256852	Standard Thread	M22	23.0	45.0	32.5	14.0	Steel

Shoulder Bolts - Hex Head

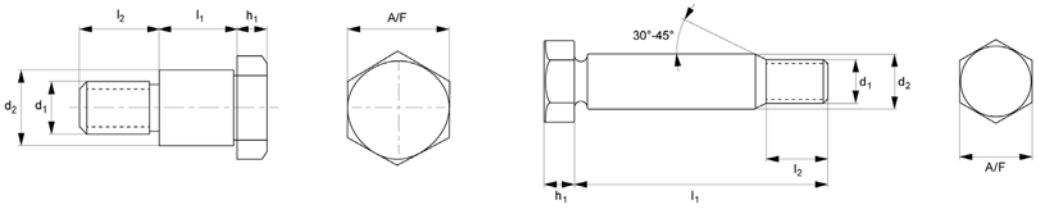



Part Number	Type	d1	d2	l1	l2	H1	Material
20256869	Standard Thread	M22	23.0	50.0	32.5	14.0	Steel
20256876	Standard Thread	M22	23.0	55.0	34.5	14.0	Steel
20256883	Standard Thread	M22	23.0	60.0	34.5	14.0	Steel
20256890	Standard Thread	M22	23.0	65.0	34.5	14.0	Steel
20256906	Standard Thread	M22	23.0	70.0	34.5	14.0	Steel
20256913	Standard Thread	M22	23.0	75.0	34.5	14.0	Steel
20256920	Standard Thread	M22	23.0	80.0	34.5	14.0	Steel
20256937	Standard Thread	M22	23.0	85.0	34.5	14.0	Steel
20256944	Standard Thread	M22	23.0	90.0	34.5	14.0	Steel
20256951	Standard Thread	M22	23.0	100.0	34.5	14.0	Steel
20259198	Standard Thread	M22	23.0	105.0	34.5	14.0	Steel
20256968	Standard Thread	M22	23.0	110.0	34.5	14.0	Steel
20256975	Standard Thread	M22	23.0	120.0	34.5	14.0	Steel
20259204	Standard Thread	M22	23.0	130.0	34.5	14.0	Steel
20256982	Standard Thread	M22	23.0	140.0	34.5	14.0	Steel
20256999	Standard Thread	M22	23.0	150.0	34.5	14.0	Steel
20259815	Standard Thread	M24	25.0	55.0	36.5	15.0	Steel
20256135	Standard Thread	M24	25.0	60.0	36.5	15.0	Steel
20259211	Standard Thread	M24	25.0	65.0	36.5	15.0	Steel
20258009	Standard Thread	M24	25.0	70.0	36.5	15.0	Steel
20259228	Standard Thread	M24	25.0	75.0	36.5	15.0	Steel
20256142	Standard Thread	M24	25.0	80.0	36.5	15.0	Steel
20259235	Standard Thread	M24	25.0	85.0	36.5	15.0	Steel
20256159	Standard Thread	M24	25.0	90.0	36.5	15.0	Steel
20256074	Standard Thread	M24	25.0	100.0	36.5	15.0	Steel
20259242	Standard Thread	M24	25.0	105.0	36.5	15.0	Steel

Shoulder Bolts - Hex Head

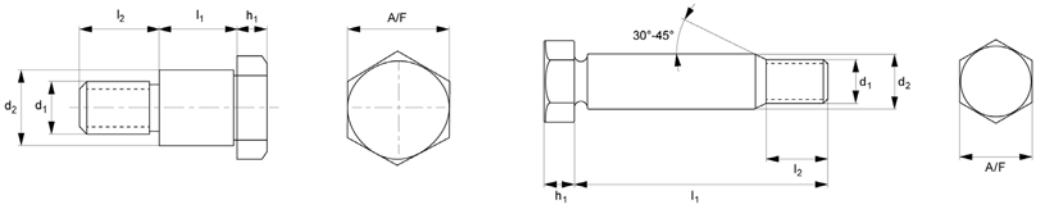



Part Number	Type	d1	d2	l1	l2	H1	Material
20256081	Standard Thread	M24	25.0	110.0	36.5	15.0	Steel
20259259	Standard Thread	M24	25.0	115.0	36.5	15.0	Steel
20256098	Standard Thread	M24	25.0	120.0	36.5	15.0	Steel
20259266	Standard Thread	M24	25.0	125.0	36.5	15.0	Steel
20256104	Standard Thread	M24	25.0	130.0	36.5	15.0	Steel
20259273	Standard Thread	M24	25.0	135.0	36.5	15.0	Steel
20256111	Standard Thread	M24	25.0	140.0	36.5	15.0	Steel
20259280	Standard Thread	M24	25.0	145.0	36.5	15.0	Steel
20256128	Standard Thread	M24	25.0	150.0	36.5	15.0	Steel
20259297	Standard Thread	M24	25.0	160.0	41.5	15.0	Steel
20257002	Standard Thread	M24	25.0	170.0	41.5	15.0	Steel
20257019	Standard Thread	M24	25.0	180.0	41.5	15.0	Steel
20259303	Standard Thread	M24	25.0	190.0	41.5	15.0	Steel
20257026	Standard Thread	M24	25.0	200.0	41.5	15.0	Steel
20257033	Standard Thread	M24	25.0	220.0	41.5	15.0	Steel
20257040	Standard Thread	M24	25.0	240.0	41.5	15.0	Steel
20257057	Standard Thread	M27	28.0	60.0	39.5	17.0	Steel
20257064	Standard Thread	M27	28.0	65.0	39.5	17.0	Steel
20257071	Standard Thread	M27	28.0	70.0	39.5	17.0	Steel
20257088	Standard Thread	M27	28.0	75.0	39.5	17.0	Steel
20257095	Standard Thread	M27	28.0	80.0	39.5	17.0	Steel
20257101	Standard Thread	M27	28.0	85.0	39.5	17.0	Steel
20257118	Standard Thread	M27	28.0	90.0	39.5	17.0	Steel
20257125	Standard Thread	M27	28.0	100.0	39.5	17.0	Steel
20257132	Standard Thread	M27	28.0	105.0	39.5	17.0	Steel
20257149	Standard Thread	M27	28.0	110.0	39.5	17.0	Steel

Shoulder Bolts - Hex Head

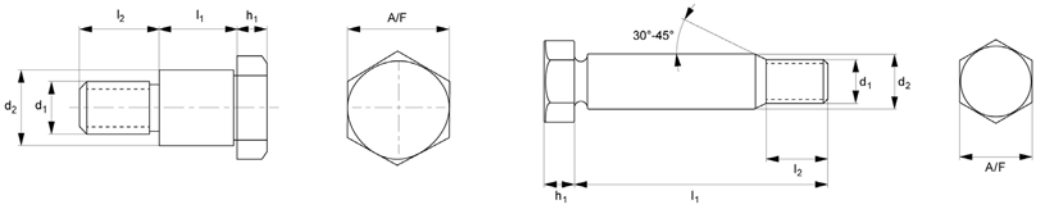



Part Number	Type	d1	d2	l1	l2	H1	Material
20257156	Standard Thread	M27	28.0	115.0	39.5	17.0	Steel
20257163	Standard Thread	M27	28.0	120.0	39.5	17.0	Steel
20257170	Standard Thread	M27	28.0	125.0	39.5	17.0	Steel
20257187	Standard Thread	M27	28.0	130.0	39.5	17.0	Steel
20257194	Standard Thread	M27	28.0	135.0	39.5	17.0	Steel
20257200	Standard Thread	M27	28.0	140.0	39.5	17.0	Steel
20257217	Standard Thread	M27	28.0	145.0	39.5	17.0	Steel
20257224	Standard Thread	M27	28.0	150.0	39.5	17.0	Steel
20257231	Standard Thread	M27	28.0	160.0	44.5	17.0	Steel
20257248	Standard Thread	M27	28.0	170.0	44.5	17.0	Steel
20257255	Standard Thread	M27	28.0	180.0	44.5	17.0	Steel
20257262	Standard Thread	M27	28.0	200.0	44.5	17.0	Steel
20259310	Standard Thread	M30	32.0	65.0	43.0	19.0	Steel
20259327	Standard Thread	M30	32.0	70.0	43.0	19.0	Steel
20259334	Standard Thread	M30	32.0	75.0	43.0	19.0	Steel
20256197	Standard Thread	M30	32.0	80.0	43.0	19.0	Steel
20259341	Standard Thread	M30	32.0	85.0	43.0	19.0	Steel
20256203	Standard Thread	M30	32.0	90.0	43.0	19.0	Steel
20256166	Standard Thread	M30	32.0	100.0	43.0	19.0	Steel
20259358	Standard Thread	M30	32.0	105.0	43.0	19.0	Steel
20256173	Standard Thread	M30	32.0	110.0	43.0	19.0	Steel
20259365	Standard Thread	M30	32.0	115.0	43.0	19.0	Steel
20256180	Standard Thread	M30	32.0	120.0	43.0	19.0	Steel
20259372	Standard Thread	M30	32.0	125.0	43.0	19.0	Steel
20259389	Standard Thread	M30	32.0	130.0	43.0	19.0	Steel
20259396	Standard Thread	M30	32.0	135.0	43.0	19.0	Steel

Shoulder Bolts - Hex Head

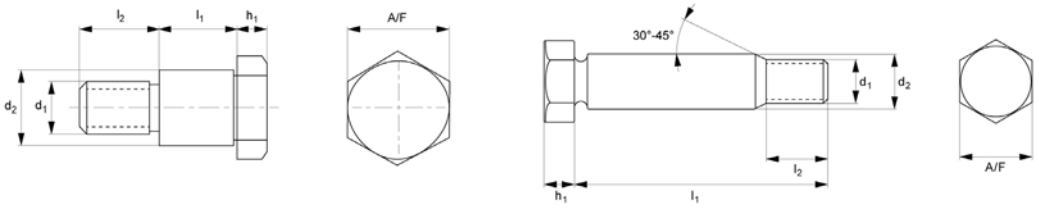



Part Number	Type	d1	d2	l1	l2	H1	Material
20259402	Standard Thread	M30	32.0	140.0	43.0	19.0	Steel
20259419	Standard Thread	M30	32.0	145.0	43.0	19.0	Steel
20259426	Standard Thread	M30	32.0	150.0	43.0	19.0	Steel
20259433	Standard Thread	M30	32.0	160.0	48.0	19.0	Steel
20259440	Standard Thread	M30	32.0	170.0	48.0	19.0	Steel
20259457	Standard Thread	M30	32.0	180.0	48.0	19.0	Steel
20259464	Standard Thread	M30	32.0	190.0	48.0	19.0	Steel
20259471	Standard Thread	M30	32.0	200.0	48.0	19.0	Steel
20259488	Standard Thread	M36	38.0	70.0	49.0	22.0	Steel
20259495	Standard Thread	M36	38.0	75.0	49.0	22.0	Steel
20259501	Standard Thread	M36	38.0	80.0	49.0	22.0	Steel
20259518	Standard Thread	M36	38.0	85.0	49.0	22.0	Steel
20259525	Standard Thread	M36	38.0	90.0	49.0	22.0	Steel
20259532	Standard Thread	M36	38.0	100.0	49.0	22.0	Steel
20259549	Standard Thread	M36	38.0	105.0	49.0	22.0	Steel
20259556	Standard Thread	M36	38.0	110.0	49.0	22.0	Steel
20259563	Standard Thread	M36	38.0	115.0	49.0	22.0	Steel
20259570	Standard Thread	M36	38.0	120.0	49.0	22.0	Steel
20259587	Standard Thread	M36	38.0	125.0	49.0	22.0	Steel
20259594	Standard Thread	M36	38.0	130.0	49.0	22.0	Steel
20259600	Standard Thread	M36	38.0	135.0	49.0	22.0	Steel
20259617	Standard Thread	M36	38.0	140.0	49.0	22.0	Steel
20259624	Standard Thread	M36	38.0	145.0	49.0	22.0	Steel
20259631	Standard Thread	M36	38.0	150.0	49.0	22.0	Steel
20259648	Standard Thread	M36	38.0	160.0	54.0	22.0	Steel
20259655	Standard Thread	M36	38.0	170.0	54.0	22.0	Steel

Shoulder Bolts - Hex Head

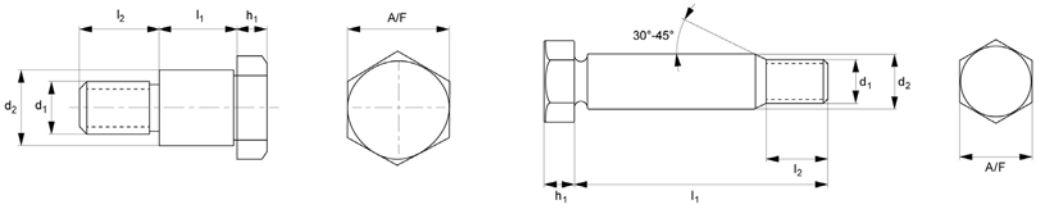



Part Number	Type	d1	d2	l1	l2	H1	Material
20259662	Standard Thread	M36	38.0	180.0	54.0	22.0	Steel
20259679	Standard Thread	M36	38.0	190.0	54.0	22.0	Steel
20259686	Standard Thread	M36	38.0	200.0	54.0	22.0	Steel
20259693	Standard Thread	M42	44.0	100.0	56.0	26.0	Steel
20259709	Standard Thread	M42	44.0	110.0	56.0	26.0	Steel
20259716	Standard Thread	M42	44.0	120.0	56.0	26.0	Steel
20259723	Standard Thread	M42	44.0	130.0	56.0	26.0	Steel
20259730	Standard Thread	M42	44.0	140.0	56.0	26.0	Steel
20259747	Standard Thread	M42	44.0	150.0	56.0	26.0	Steel
20259754	Standard Thread	M42	44.0	160.0	61.0	26.0	Steel
20259761	Standard Thread	M42	44.0	170.0	61.0	26.0	Steel
20259778	Standard Thread	M42	44.0	180.0	61.0	26.0	Steel
20259785	Standard Thread	M42	44.0	190.0	61.0	26.0	Steel
20259792	Standard Thread	M42	44.0	200.0	61.0	26.0	Steel
20261382	Standard Thread	M8	9.0	25.0	14.5	5.3	Steel
20261399	Standard Thread	M8	9.0	28.0	14.5	5.3	Steel
20261405	Standard Thread	M8	9.0	35.0	14.5	5.3	Steel
20261412	Standard Thread	M8	9.0	38.0	14.5	5.3	Steel
20261429	Standard Thread	M8	9.0	40.0	14.5	5.3	Steel
20261436	Standard Thread	M8	9.0	48.0	14.5	5.3	Steel
20261375	Standard Thread	M8	9.0	60.0	16.5	5.3	Steel
20261443	Standard Thread	M8	9.0	80.0	16.5	5.3	Steel
20261450	Standard Thread	M10	11.0	30.0	17.5	6.4	Steel
20261467	Standard Thread	M10	11.0	32.0	17.5	6.4	Steel
20261474	Standard Thread	M10	11.0	35.0	17.5	6.4	Steel
20261481	Standard Thread	M10	11.0	38.0	17.5	6.4	Steel

Shoulder Bolts - Hex Head

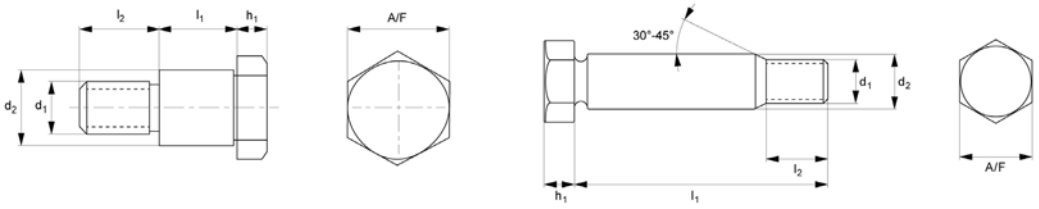



Part Number	Type	d1	d2	l1	l2	H1	Material
20261498	Standard Thread	M10	11.0	40.0	17.5	6.4	Steel
20261504	Standard Thread	M10	11.0	42.0	17.5	6.4	Steel
20261511	Standard Thread	M10	11.0	45.0	17.5	6.4	Steel
20261528	Standard Thread	M10	11.0	48.0	17.5	6.4	Steel
20261535	Standard Thread	M10	11.0	50.0	17.5	6.4	Steel
20261542	Standard Thread	M10	11.0	55.0	19.5	6.4	Steel
20261559	Standard Thread	M10	11.0	60.0	19.5	6.4	Steel
20261566	Standard Thread	M10	11.0	65.0	19.5	6.4	Steel
20261573	Standard Thread	M10	11.0	70.0	19.5	6.4	Steel
20261580	Standard Thread	M10	11.0	75.0	19.5	6.4	Steel
20261597	Standard Thread	M10	11.0	80.0	19.5	6.4	Steel
20261603	Standard Thread	M12	13.0	30.0	20.5	7.5	Steel
20261610	Standard Thread	M12	13.0	32.0	20.5	7.5	Steel
20259846	Standard Thread	M12	13.0	35.0	20.5	7.5	Steel
20261627	Standard Thread	M12	13.0	38.0	20.5	7.5	Steel
20261634	Standard Thread	M12	13.0	40.0	20.5	7.5	Steel
20261641	Standard Thread	M12	13.0	45.0	20.5	7.5	Steel
20261658	Standard Thread	M12	13.0	48.0	20.5	7.5	Steel
20261665	Standard Thread	M12	13.0	50.0	20.5	7.5	Steel
20261672	Standard Thread	M12	13.0	55.0	22.5	7.5	Steel
20261689	Standard Thread	M12	13.0	60.0	22.5	7.5	Steel
20261696	Standard Thread	M12	13.0	65.0	22.5	7.5	Steel
20261702	Standard Thread	M12	13.0	70.0	22.5	7.5	Steel
20261719	Standard Thread	M12	13.0	75.0	22.5	7.5	Steel
20261726	Standard Thread	M12	13.0	90.0	22.5	7.5	Steel
20261733	Standard Thread	M12	13.0	110.0	22.5	7.5	Steel

Shoulder Bolts - Hex Head

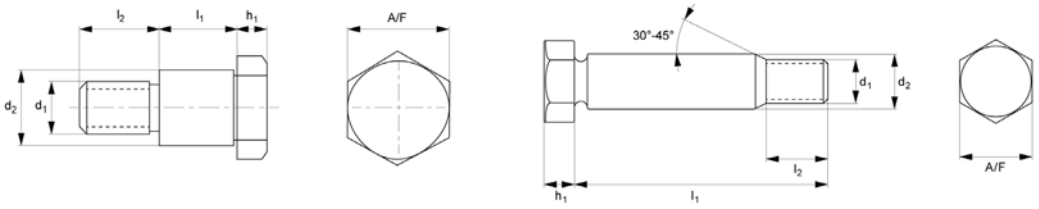



Part Number	Type	d1	d2	l1	l2	H1	Material
20261740	Standard Thread	M14	15.0	35.0	22.0	8.8	Steel
20261757	Standard Thread	M14	15.0	40.0	22.0	8.8	Steel
20261764	Standard Thread	M14	15.0	42.0	22.0	8.8	Steel
20261771	Standard Thread	M14	15.0	45.0	22.0	8.8	Steel
20261788	Standard Thread	M14	15.0	50.0	22.0	8.8	Steel
20261795	Standard Thread	M14	15.0	55.0	24.0	8.8	Steel
20261801	Standard Thread	M14	15.0	60.0	24.0	8.8	Steel
20261818	Standard Thread	M14	15.0	80.0	24.0	8.8	Steel
20261825	Standard Thread	M16	17.0	40.0	25.0	10.0	Steel
20261832	Standard Thread	M16	17.0	42.0	25.0	10.0	Steel
20261849	Standard Thread	M16	17.0	45.0	25.0	10.0	Steel
20261856	Standard Thread	M16	17.0	48.0	25.0	10.0	Steel
20261863	Standard Thread	M16	17.0	50.0	25.0	10.0	Steel
20261870	Standard Thread	M16	17.0	55.0	27.0	10.0	Steel
20261887	Standard Thread	M16	17.0	60.0	27.0	10.0	Steel
20261894	Standard Thread	M16	17.0	65.0	27.0	10.0	Steel
20261900	Standard Thread	M16	17.0	70.0	27.0	10.0	Steel
20261917	Standard Thread	M16	17.0	75.0	27.0	10.0	Steel
20261924	Standard Thread	M16	17.0	80.0	27.0	10.0	Steel
20261931	Standard Thread	M16	17.0	85.0	27.0	10.0	Steel
20261948	Standard Thread	M16	17.0	90.0	27.0	10.0	Steel
20261955	Standard Thread	M16	17.0	100.0	27.0	10.0	Steel
20261979	Standard Thread	M16	17.0	110.0	27.0	10.0	Steel
20261986	Standard Thread	M16	17.0	120.0	27.0	10.0	Steel
20261993	Standard Thread	M16	17.0	150.0	27.0	10.0	Steel
20262013	Standard Thread	M20	21.0	45.0	28.5	12.5	Steel

Shoulder Bolts - Hex Head

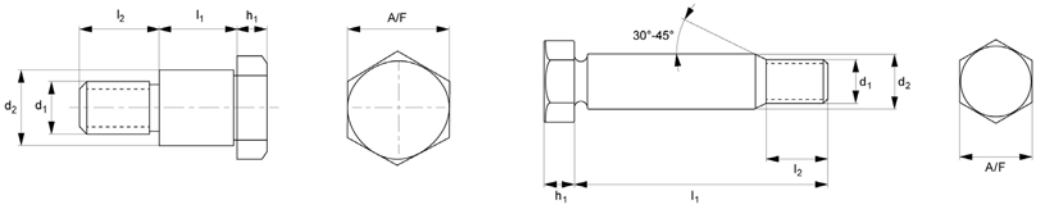



Part Number	Type	d1	d2	l1	l2	H1	Material
20262020	Standard Thread	M20	21.0	50.0	28.5	12.5	Steel
20262037	Standard Thread	M20	21.0	55.0	30.5	12.5	Steel
20262044	Standard Thread	M20	21.0	60.0	30.5	12.5	Steel
20262051	Standard Thread	M20	21.0	65.0	30.5	12.5	Steel
20262068	Standard Thread	M20	21.0	70.0	30.5	12.5	Steel
20262075	Standard Thread	M20	21.0	75.0	30.5	12.5	Steel
20262082	Standard Thread	M20	21.0	80.0	30.5	12.5	Steel
20262099	Standard Thread	M20	21.0	85.0	30.5	12.5	Steel
20262105	Standard Thread	M20	21.0	90.0	30.5	12.5	Steel
20262112	Standard Thread	M20	21.0	100.0	30.5	12.5	Steel
20262129	Standard Thread	M20	21.0	105.0	30.5	12.5	Steel
20262136	Standard Thread	M20	21.0	110.0	30.5	12.5	Steel
20262143	Standard Thread	M20	21.0	120.0	30.5	12.5	Steel
20262150	Standard Thread	M20	21.0	130.0	30.5	12.5	Steel
20262167	Standard Thread	M20	21.0	140.0	30.5	12.5	Steel
20262174	Standard Thread	M20	21.0	150.0	30.5	12.5	Steel
20262181	Standard Thread	M20	21.0	160.0	35.5	12.5	Steel
20262198	Standard Thread	M24	25.0	55.0	36.5	15.0	Steel
20262204	Standard Thread	M24	25.0	60.0	36.5	15.0	Steel
20262211	Standard Thread	M24	25.0	65.0	36.5	15.0	Steel
20262228	Standard Thread	M24	25.0	70.0	36.5	15.0	Steel
20262235	Standard Thread	M24	25.0	75.0	36.5	15.0	Steel
20262242	Standard Thread	M24	25.0	80.0	36.5	15.0	Steel
20262259	Standard Thread	M24	25.0	85.0	36.5	15.0	Steel
20262266	Standard Thread	M24	25.0	90.0	36.5	15.0	Steel
20262273	Standard Thread	M24	25.0	100.0	36.5	15.0	Steel

Shoulder Bolts - Hex Head

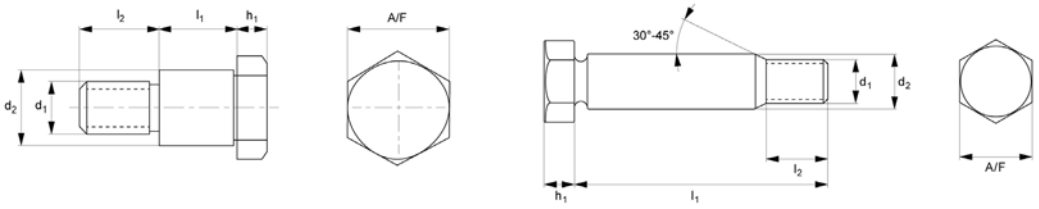



Part Number	Type	d1	d2	l1	l2	H1	Material
20262280	Standard Thread	M24	25.0	105.0	36.5	15.0	Steel
20262297	Standard Thread	M24	25.0	110.0	36.5	15.0	Steel
20259877	Standard Thread	M24	25.0	120.0	36.5	15.0	Steel
20262303	Standard Thread	M24	25.0	125.0	36.5	15.0	Steel
20262310	Standard Thread	M24	25.0	130.0	36.5	15.0	Steel
20262327	Standard Thread	M24	25.0	140.0	36.5	15.0	Steel
20262334	Standard Thread	M24	25.0	150.0	36.5	15.0	Steel
20262341	Standard Thread	M24	25.0	160.0	41.5	15.0	Steel
20262358	Standard Thread	M24	25.0	170.0	41.5	15.0	Steel
20262365	Standard Thread	M24	25.0	180.0	41.5	15.0	Steel
20262372	Standard Thread	M30	32.0	80.0	43.0	19.0	Steel
20262389	Standard Thread	M30	32.0	90.0	43.0	19.0	Steel
20262396	Standard Thread	M30	32.0	100.0	43.0	19.0	Steel
20262402	Standard Thread	M30	32.0	105.0	43.0	19.0	Steel
20262419	Standard Thread	M30	32.0	110.0	43.0	19.0	Steel
20262426	Standard Thread	M30	32.0	120.0	43.0	19.0	Steel
20262433	Standard Thread	M30	32.0	130.0	43.0	19.0	Steel
20262440	Standard Thread	M30	32.0	140.0	43.0	19.0	Steel
20262457	Standard Thread	M36	38.0	120.0	49.0	22.0	Steel
20262464	Standard Thread	M36	38.0	130.0	49.0	22.0	Steel
20262471	Standard Thread	M36	38.0	200.0	54.0	22.0	Steel
20262488	Short Thread	M8	9.0	24.0	11.5	5.3	Steel
20259860	Short Thread	M8	9.0	25.0	11.5	5.3	Steel
20260286	Short Thread	M8	9.0	35.0	11.5	5.3	Steel
20260293	Short Thread	M8	9.0	38.0	11.5	5.3	Steel
20260309	Short Thread	M8	9.0	40.0	11.5	5.3	Steel

Shoulder Bolts - Hex Head

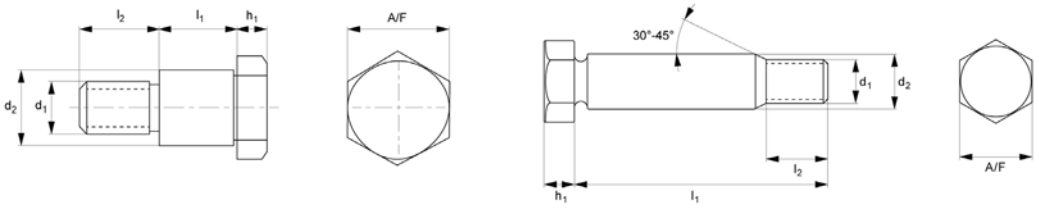



Part Number	Type	d1	d2	l1	l2	H1	Material
20260316	Short Thread	M8	9.0	48.0	11.5	5.3	Steel
20260323	Short Thread	M8	9.0	60.0	13.5	5.3	Steel
20260330	Short Thread	M8	9.0	80.0	13.5	5.3	Steel
20260347	Short Thread	M10	11.0	30.0	13.5	6.4	Steel
20260354	Short Thread	M10	11.0	32.0	13.5	6.4	Steel
20260361	Short Thread	M10	11.0	35.0	13.5	6.4	Steel
20260378	Short Thread	M10	11.0	38.0	13.5	6.4	Steel
20260385	Short Thread	M10	11.0	40.0	13.5	6.4	Steel
20260392	Short Thread	M10	11.0	42.0	13.5	6.4	Steel
20260408	Short Thread	M10	11.0	45.0	13.5	6.4	Steel
20260415	Short Thread	M10	11.0	48.0	13.5	6.4	Steel
20260422	Short Thread	M10	11.0	50.0	13.5	6.4	Steel
20260439	Short Thread	M10	11.0	55.0	15.5	6.4	Steel
20260446	Short Thread	M10	11.0	60.0	15.5	6.4	Steel
20260453	Short Thread	M10	11.0	65.0	15.5	6.4	Steel
20260460	Short Thread	M10	11.0	70.0	15.5	6.4	Steel
20260477	Short Thread	M10	11.0	75.0	15.5	6.4	Steel
20260484	Short Thread	M10	11.0	80.0	15.5	6.4	Steel
20260491	Short Thread	M12	13.0	30.0	15.5	7.5	Steel
20260507	Short Thread	M12	13.0	32.0	15.5	7.5	Steel
20260514	Short Thread	M12	13.0	35.0	15.5	7.5	Steel
20260521	Short Thread	M12	13.0	38.0	15.5	7.5	Steel
20260538	Short Thread	M12	13.0	40.0	15.5	7.5	Steel
20260545	Short Thread	M12	13.0	45.0	15.5	7.5	Steel
20260552	Short Thread	M12	13.0	48.0	15.5	7.5	Steel
20260569	Short Thread	M12	13.0	50.0	15.5	7.5	Steel

Shoulder Bolts - Hex Head

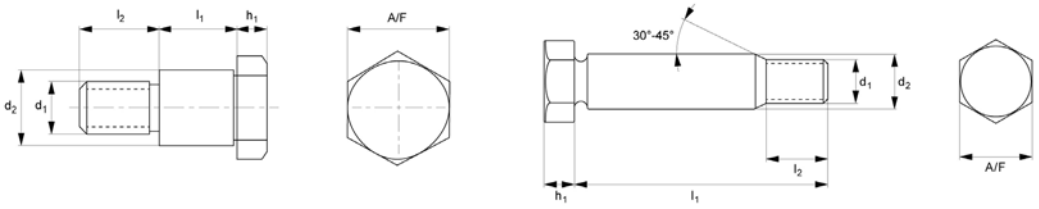



Part Number	Type	d1	d2	l1	l2	H1	Material
20260576	Short Thread	M12	13.0	55.0	17.5	7.5	Steel
20260583	Short Thread	M12	13.0	60.0	17.5	7.5	Steel
20260590	Short Thread	M12	13.0	65.0	17.5	7.5	Steel
20260606	Short Thread	M12	13.0	70.0	17.5	7.5	Steel
20260613	Short Thread	M12	13.0	75.0	17.5	7.5	Steel
20260620	Short Thread	M12	13.0	90.0	17.5	7.5	Steel
20260637	Short Thread	M12	13.0	110.0	17.5	7.5	Steel
20260644	Short Thread	M14	15.0	35.0	17.0	8.8	Steel
20260651	Short Thread	M14	15.0	40.0	17.0	8.8	Steel
20260668	Short Thread	M14	15.0	42.0	17.0	8.8	Steel
20260675	Short Thread	M14	15.0	45.0	17.0	8.8	Steel
20260682	Short Thread	M14	15.0	50.0	17.0	8.8	Steel
20260699	Short Thread	M14	15.0	55.0	19.0	8.8	Steel
20260705	Short Thread	M14	15.0	60.0	19.0	8.8	Steel
20260712	Short Thread	M14	15.0	80.0	19.0	8.8	Steel
20260729	Short Thread	M16	17.0	40.0	19.0	10.0	Steel
20260736	Short Thread	M16	17.0	42.0	19.0	10.0	Steel
20260743	Short Thread	M16	17.0	45.0	19.0	10.0	Steel
20260750	Short Thread	M16	17.0	48.0	19.0	10.0	Steel
20260767	Short Thread	M16	17.0	50.0	19.0	10.0	Steel
20260774	Short Thread	M16	17.0	55.0	21.0	10.0	Steel
20260781	Short Thread	M16	17.0	60.0	21.0	10.0	Steel
20260798	Short Thread	M16	17.0	65.0	21.0	10.0	Steel
20260804	Short Thread	M16	17.0	70.0	21.0	10.0	Steel
20260811	Short Thread	M16	17.0	75.0	21.0	10.0	Steel
20260828	Short Thread	M16	17.0	80.0	21.0	10.0	Steel

Shoulder Bolts - Hex Head

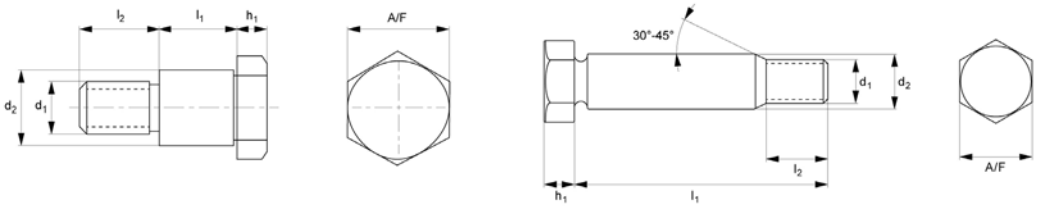



Part Number	Type	d1	d2	l1	l2	H1	Material
20260835	Short Thread	M16	17.0	85.0	21.0	10.0	Steel
20260842	Short Thread	M16	17.0	90.0	21.0	10.0	Steel
20260859	Short Thread	M16	17.0	100.0	21.0	10.0	Steel
20260866	Short Thread	M16	17.0	110.0	21.0	10.0	Steel
20260873	Short Thread	M16	17.0	120.0	21.0	10.0	Steel
20260880	Short Thread	M16	17.0	150.0	21.0	10.0	Steel
20260897	Short Thread	M20	21.0	45.0	22.5	12.5	Steel
20260903	Short Thread	M20	21.0	50.0	22.5	12.5	Steel
20260910	Short Thread	M20	21.0	55.0	24.5	12.5	Steel
20260927	Short Thread	M20	21.0	60.0	24.5	12.5	Steel
20260934	Short Thread	M20	21.0	65.0	24.5	12.5	Steel
20260941	Short Thread	M20	21.0	70.0	24.5	12.5	Steel
20260958	Short Thread	M20	21.0	75.0	24.5	12.5	Steel
20260965	Short Thread	M20	21.0	80.0	24.5	12.5	Steel
20260972	Short Thread	M20	21.0	85.0	24.5	12.5	Steel
20260989	Short Thread	M20	21.0	90.0	24.5	12.5	Steel
20260996	Short Thread	M20	21.0	100.0	24.5	12.5	Steel
20261009	Short Thread	M20	21.0	105.0	24.5	12.5	Steel
20261016	Short Thread	M20	21.0	110.0	24.5	12.5	Steel
20261023	Short Thread	M20	21.0	120.0	24.5	12.5	Steel
20261030	Short Thread	M20	21.0	130.0	24.5	12.5	Steel
20261047	Short Thread	M20	21.0	140.0	24.5	12.5	Steel
20261054	Short Thread	M20	21.0	150.0	24.5	12.5	Steel
20261061	Short Thread	M20	21.0	160.0	29.5	12.5	Steel
20261078	Short Thread	M24	25.0	55.0	28.5	15.0	Steel
20261085	Short Thread	M24	25.0	60.0	28.5	15.0	Steel

Shoulder Bolts - Hex Head

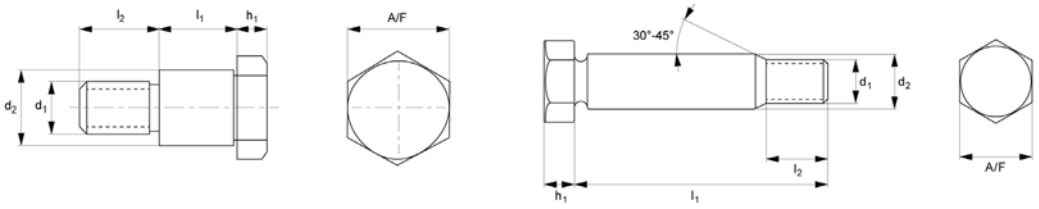



Part Number	Type	d1	d2	l1	l2	H1	Material
20261092	Short Thread	M24	25.0	65.0	28.5	15.0	Steel
20261108	Short Thread	M24	25.0	70.0	28.5	15.0	Steel
20261115	Short Thread	M24	25.0	75.0	28.5	15.0	Steel
20261122	Short Thread	M24	25.0	80.0	28.5	15.0	Steel
20261139	Short Thread	M24	25.0	85.0	28.5	15.0	Steel
20261146	Short Thread	M24	25.0	90.0	28.5	15.0	Steel
20261153	Short Thread	M24	25.0	100.0	28.5	15.0	Steel
20261160	Short Thread	M24	25.0	105.0	28.5	15.0	Steel
20261177	Short Thread	M24	25.0	110.0	28.5	15.0	Steel
20261184	Short Thread	M24	25.0	120.0	28.5	15.0	Steel
20261191	Short Thread	M24	25.0	125.0	28.5	15.0	Steel
20261207	Short Thread	M24	25.0	130.0	28.5	15.0	Steel
20261214	Short Thread	M24	25.0	140.0	28.5	15.0	Steel
20261221	Short Thread	M24	25.0	150.0	28.5	15.0	Steel
20261238	Short Thread	M24	25.0	160.0	33.5	15.0	Steel
20261245	Short Thread	M24	25.0	170.0	33.5	15.0	Steel
20261252	Short Thread	M24	25.0	180.0	33.5	15.0	Steel
20261269	Short Thread	M30	32.0	80.0	34.0	19.0	Steel
20261276	Short Thread	M30	32.0	90.0	34.0	19.0	Steel
20261283	Short Thread	M30	32.0	100.0	34.0	19.0	Steel
20261290	Short Thread	M30	32.0	105.0	34.0	19.0	Steel
20261306	Short Thread	M30	32.0	110.0	34.0	19.0	Steel
20261313	Short Thread	M30	32.0	120.0	34.0	19.0	Steel
20261320	Short Thread	M30	32.0	130.0	34.0	19.0	Steel
20261337	Short Thread	M30	32.0	140.0	34.0	19.0	Steel
20261344	Short Thread	M36	38.0	120.0	40.0	22.0	Steel

Shoulder Bolts - Hex Head

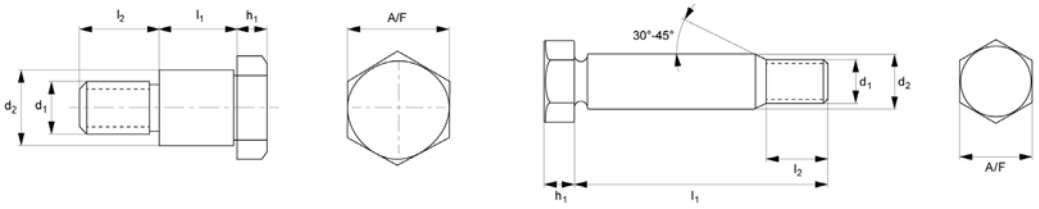



Part Number	Type	d1	d2	l1	l2	H1	Material
20261351	Short Thread	M36	38.0	130.0	40.0	22.0	Steel
20261368	Short Thread	M36	38.0	200.0	45.0	22.0	Steel
20259839	Construction Grade	M12	12.74	35.0	20.5	8.0	Steel
20259891	Construction Grade	M12	12.74	40.0	20.5	8.0	Steel
20259907	Construction Grade	M12	12.74	45.0	20.5	8.0	Steel
20259914	Construction Grade	M12	12.74	50.0	20.5	8.0	Steel
20259921	Construction Grade	M12	12.74	55.0	20.5	8.0	Steel
20259938	Construction Grade	M12	12.74	60.0	20.5	8.0	Steel
20259945	Construction Grade	M12	12.74	70.0	20.5	8.0	Steel
20259952	Construction Grade	M12	12.74	75.0	20.5	8.0	Steel
20259969	Construction Grade	M16	16.74	40.0	24.5	10.0	Steel
20259976	Construction Grade	M16	16.74	45.0	24.5	10.0	Steel
20259983	Construction Grade	M16	16.74	50.0	24.5	10.0	Steel
20259990	Construction Grade	M16	16.74	55.0	24.5	10.0	Steel
20260002	Construction Grade	M16	16.74	60.0	24.5	10.0	Steel
20260019	Construction Grade	M16	16.74	65.0	24.5	10.0	Steel
20260026	Construction Grade	M16	16.74	70.0	24.5	10.0	Steel
20260033	Construction Grade	M16	16.74	80.0	24.5	10.0	Steel
20260040	Construction Grade	M16	16.74	85.0	24.5	10.0	Steel
20260057	Construction Grade	M20	20.71	50.0	28.5	13.0	Steel
20260064	Construction Grade	M20	20.71	55.0	28.5	13.0	Steel
20260071	Construction Grade	M20	20.71	60.0	28.5	13.0	Steel
20260088	Construction Grade	M20	20.71	65.0	28.5	13.0	Steel
20260095	Construction Grade	M20	20.71	70.0	28.5	13.0	Steel
20260101	Construction Grade	M20	20.71	75.0	28.5	13.0	Steel
20260118	Construction Grade	M20	20.71	80.0	28.5	13.0	Steel

Shoulder Bolts - Hex Head

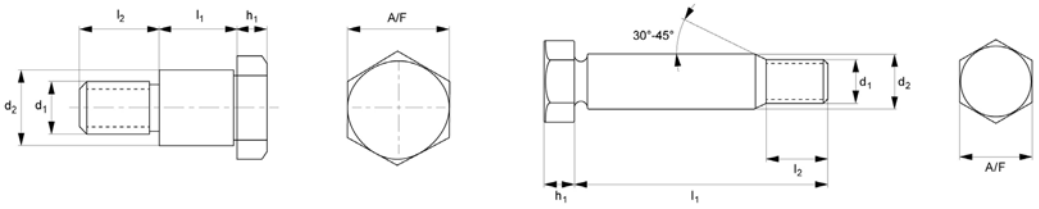



Part Number	Type	d1	d2	l1	l2	H1	Material
20260125	Construction Grade	M20	20.71	90.0	28.5	13.0	Steel
20260132	Construction Grade	M20	20.71	100.0	28.5	13.0	Steel
20260149	Construction Grade	M20	20.71	110.0	28.5	13.0	Steel
20260156	Construction Grade	M24	24.71	60.0	33.0	15.0	Steel
20260163	Construction Grade	M24	24.71	65.0	33.0	15.0	Steel
20259884	Construction Grade	M24	24.71	70.0	33.0	15.0	Steel
20260170	Construction Grade	M24	24.71	75.0	33.0	15.0	Steel
20260187	Construction Grade	M24	24.71	80.0	33.0	15.0	Steel
20260194	Construction Grade	M24	24.71	85.0	33.0	15.0	Steel
20260200	Construction Grade	M24	24.71	90.0	33.0	15.0	Steel
20260217	Construction Grade	M24	24.71	100.0	33.0	15.0	Steel
20260224	Construction Grade	M24	24.71	120.0	33.0	15.0	Steel
20260231	Construction Grade	M24	24.71	160.0	33.0	15.0	Steel
20260248	Construction Grade	M24	24.71	195.0	33.0	15.0	Steel
20260255	Construction Grade	M27	27.71	90.0	33.5	17.0	Steel
20260262	Construction Grade	M27	27.71	100.0	33.5	17.0	Steel
20260279	Construction Grade	M27	27.71	110.0	33.5	17.0	Steel
20257279	Small Sizes	M3	13.0	4.0	4.0	2.1	303 Stainless Steel
20257286	Small Sizes	M3	13.0	5.0	4.0	2.1	303 Stainless Steel
20257293	Small Sizes	M3	17.0	6.0	4.0	2.1	303 Stainless Steel
20257309	Small Sizes	M3	17.0	8.0	4.0	2.1	303 Stainless Steel
20257316	Small Sizes	M3	17.0	10.0	4.0	2.1	303 Stainless Steel
20257323	Small Sizes	M4	17.0	4.0	5.0	2.9	303 Stainless Steel
20257330	Small Sizes	M4	17.0	5.0	5.0	2.9	303 Stainless Steel
20257347	Small Sizes	M4	17.0	6.0	5.0	2.9	303 Stainless Steel
20257354	Small Sizes	M4	17.0	8.0	5.0	2.9	303 Stainless Steel

Shoulder Bolts - Hex Head

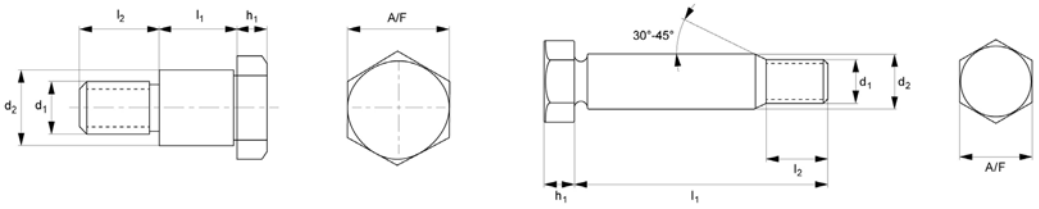



Part Number	Type	d1	d2	l1	l2	H1	Material
20257361	Small Sizes	M4	17.0	10.0	5.0	2.9	303 Stainless Steel
20257378	Small Sizes	M4	5.0	12.0	5.0	2.9	303 Stainless Steel
20257385	Small Sizes	M4	5.0	14.0	5.0	2.9	303 Stainless Steel
20257392	Small Sizes	M4	5.0	16.0	5.0	2.9	303 Stainless Steel
20257408	Small Sizes	M4	5.0	20.0	5.0	2.9	303 Stainless Steel
20257415	Small Sizes	M4	5.0	25.0	5.0	2.9	303 Stainless Steel
20257422	Small Sizes	M4	5.0	30.0	5.0	2.9	303 Stainless Steel
20257439	Small Sizes	M5	6.0	4.0	6.0	3.6	303 Stainless Steel
20257446	Small Sizes	M5	6.0	5.0	6.0	3.6	303 Stainless Steel
20257453	Small Sizes	M5	6.0	6.0	6.0	3.6	303 Stainless Steel
20257460	Small Sizes	M5	6.0	8.0	6.0	3.6	303 Stainless Steel
20257477	Small Sizes	M5	6.0	10.0	6.0	3.6	303 Stainless Steel
20257484	Small Sizes	M5	6.0	12.0	6.0	3.6	303 Stainless Steel
20257491	Small Sizes	M5	6.0	14.0	6.0	3.6	303 Stainless Steel
20257507	Small Sizes	M5	6.0	16.0	6.0	3.6	303 Stainless Steel
20257514	Small Sizes	M5	6.0	20.0	6.0	3.6	303 Stainless Steel
20257521	Small Sizes	M5	6.0	25.0	6.0	3.6	303 Stainless Steel
20257538	Small Sizes	M5	6.0	30.0	6.0	3.6	303 Stainless Steel
20257545	Small Sizes	M6	8.0	6.0	11.0	4.1	303 Stainless Steel
20257552	Small Sizes	M6	8.0	8.0	11.0	4.1	303 Stainless Steel
20257569	Small Sizes	M6	8.0	10.0	11.0	4.1	303 Stainless Steel
20257576	Small Sizes	M6	8.0	12.0	11.0	4.1	303 Stainless Steel
20257583	Small Sizes	M6	8.0	16.0	11.0	4.1	303 Stainless Steel
20257590	Small Sizes	M6	8.0	20.0	11.0	4.1	303 Stainless Steel
20257606	Small Sizes	M6	10.0	8.0	11.0	5.4	303 Stainless Steel
20257613	Small Sizes	M6	10.0	10.0	11.0	5.4	303 Stainless Steel

Shoulder Bolts - Hex Head

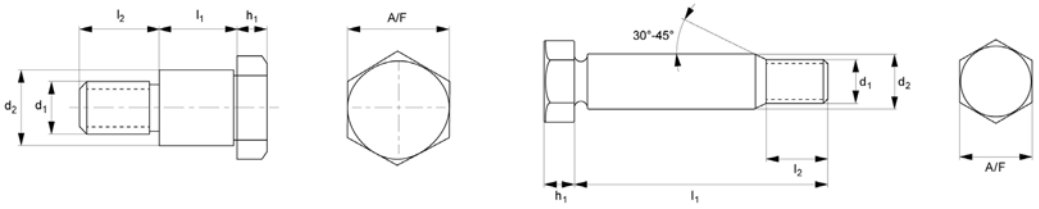



Part Number	Type	d1	d2	l1	l2	H1	Material
20257620	Small Sizes	M6	10.0	12.0	11.0	5.4	303 Stainless Steel
20257637	Small Sizes	M6	10.0	16.0	11.0	5.4	303 Stainless Steel
20257644	Small Sizes	M8	10.0	8.0	12.0	5.4	303 Stainless Steel
20257651	Small Sizes	M8	10.0	10.0	12.0	5.4	303 Stainless Steel
20257668	Small Sizes	M8	10.0	12.0	12.0	5.4	303 Stainless Steel
20257675	Small Sizes	M8	10.0	16.0	12.0	5.4	303 Stainless Steel
20257682	Small Sizes	M10	12.0	12.0	16.0	6.6	303 Stainless Steel
20257699	Small Sizes	M10	12.0	16.0	16.0	6.6	303 Stainless Steel
20257705	Small Sizes	M10	12.0	20.0	16.0	6.6	303 Stainless Steel
20257712	Small Sizes	M10	12.0	25.0	16.0	6.6	303 Stainless Steel
20256210	Long Thread	M8	9.0	25.0	14.5	5.3	303 Stainless Steel
20256227	Long Thread	M8	9.0	30.0	14.5	5.3	303 Stainless Steel
20256234	Long Thread	M8	9.0	40.0	14.5	5.3	303 Stainless Steel
20256241	Long Thread	M8	9.0	45.0	14.5	5.3	303 Stainless Steel
20256258	Long Thread	M8	9.0	60.0	16.5	5.3	303 Stainless Steel
20256265	Long Thread	M8	9.0	80.0	16.5	5.3	303 Stainless Steel
20256272	Long Thread	M10	11.0	30.0	17.5	6.4	303 Stainless Steel
20256289	Long Thread	M10	11.0	40.0	17.5	6.4	303 Stainless Steel
20256296	Long Thread	M10	11.0	45.0	17.5	6.4	303 Stainless Steel
20256302	Long Thread	M10	11.0	50.0	17.5	6.4	303 Stainless Steel
20256319	Long Thread	M10	11.0	60.0	19.5	6.4	303 Stainless Steel
20256326	Long Thread	M10	11.0	70.0	19.5	6.4	303 Stainless Steel
20256333	Long Thread	M10	11.0	80.0	19.5	6.4	303 Stainless Steel
20256340	Long Thread	M12	13.0	40.0	20.5	10.0	303 Stainless Steel
20256357	Long Thread	M12	13.0	45.0	20.5	10.0	303 Stainless Steel
20256364	Long Thread	M12	13.0	50.0	20.5	10.0	303 Stainless Steel

Shoulder Bolts - Hex Head

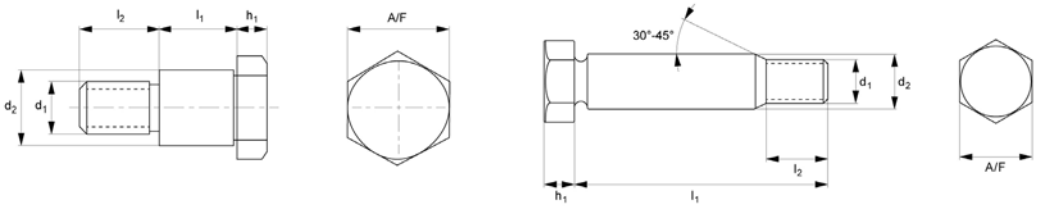



Part Number	Type	d1	d2	l1	l2	H1	Material
20256371	Long Thread	M12	13.0	55.0	22.5	10.0	303 Stainless Steel
20256388	Long Thread	M12	13.0	60.0	22.5	10.0	303 Stainless Steel
20256395	Long Thread	M12	13.0	65.0	22.5	10.0	303 Stainless Steel
20256401	Long Thread	M12	13.0	80.0	22.5	10.0	303 Stainless Steel
20256418	Long Thread	M16	17.0	40.0	25.0	11.5	303 Stainless Steel
20256425	Long Thread	M16	17.0	45.0	25.0	11.5	303 Stainless Steel
20256432	Long Thread	M16	17.0	50.0	25.0	11.5	303 Stainless Steel
20256449	Long Thread	M16	17.0	55.0	27.0	11.5	303 Stainless Steel
20256456	Long Thread	M16	17.0	60.0	27.0	11.5	303 Stainless Steel
20256463	Long Thread	M16	17.0	65.0	27.0	11.5	303 Stainless Steel
20256470	Long Thread	M16	17.0	70.0	27.0	11.5	303 Stainless Steel
20256487	Long Thread	M16	17.0	80.0	27.0	11.5	303 Stainless Steel
20256494	Long Thread	M16	17.0	95.0	27.0	11.5	303 Stainless Steel
20257736	Short Thread	M8	9.0	25.0	11.5	5.3	303 Stainless Steel
20257743	Short Thread	M8	9.0	30.0	11.5	5.3	303 Stainless Steel
20257750	Short Thread	M8	9.0	40.0	11.5	5.3	303 Stainless Steel
20257767	Short Thread	M8	9.0	45.0	11.5	5.3	303 Stainless Steel
20257774	Short Thread	M10	11.0	40.0	13.5	6.4	303 Stainless Steel
20257781	Short Thread	M10	11.0	45.0	13.5	6.4	303 Stainless Steel
20257798	Short Thread	M10	11.0	50.0	13.5	6.4	303 Stainless Steel
20257804	Short Thread	M10	11.0	60.0	15.5	6.4	303 Stainless Steel
20257811	Short Thread	M10	11.0	80.0	15.5	6.4	303 Stainless Steel
20257828	Short Thread	M10	11.0	100.0	15.5	6.4	303 Stainless Steel
20257835	Short Thread	M12	13.0	40.0	15.5	10.0	303 Stainless Steel
20257842	Short Thread	M12	13.0	45.0	15.5	10.0	303 Stainless Steel
20257859	Short Thread	M12	13.0	50.0	15.5	10.0	303 Stainless Steel

Shoulder Bolts - Hex Head

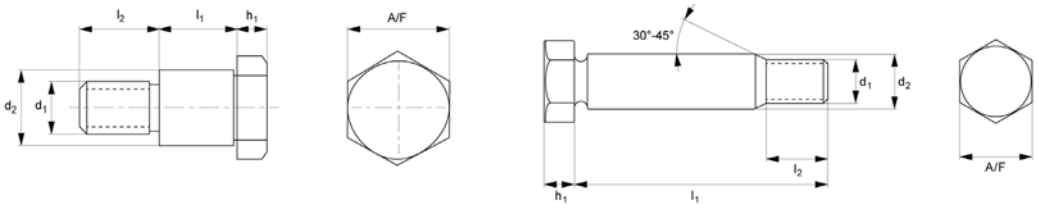



Part Number	Type	d1	d2	l1	l2	H1	Material
20257866	Short Thread	M12	13.0	80.0	17.5	10.0	303 Stainless Steel
20257873	Short Thread	M16	17.0	40.0	19.0	11.5	303 Stainless Steel
20257880	Short Thread	M16	17.0	45.0	19.0	11.5	303 Stainless Steel
20257897	Short Thread	M16	17.0	50.0	19.0	11.5	303 Stainless Steel
20257903	Short Thread	M16	17.0	55.0	21.0	11.5	303 Stainless Steel
20257910	Short Thread	M16	17.0	60.0	21.0	11.5	303 Stainless Steel
20257927	Short Thread	M16	17.0	65.0	21.0	11.5	303 Stainless Steel
20257934	Short Thread	M16	17.0	70.0	21.0	11.5	303 Stainless Steel
20257941	Short Thread	M16	17.0	80.0	21.0	11.5	303 Stainless Steel

Precision Adjusters

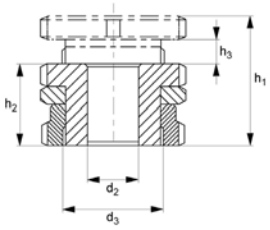

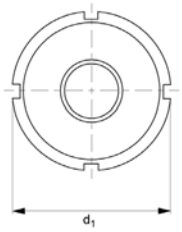

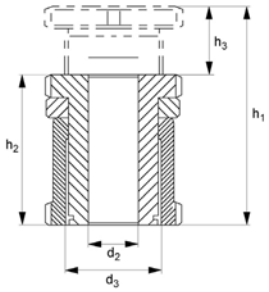

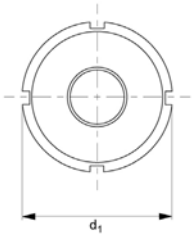



Features

- Designed for applications with limited space.
- It provides movement stability and reproducibility.
- Used in electronics, robotics, machine tools, and medical devices.

Specifications

Material: Stainless Steel, Steel

These Precision Adjusters give fine-tuning capabilities, allowing for accurate placement, alignment, or calibration of an object.

They are designed for applications with limited space and may easily make minute modifications to ensure maximum performance and desired outcomes.

It provides movement stability and reproducibility. Once adjusted, it maintains its position, guaranteeing stability during operation. This is especially critical when vibrations, external pressures, or temperature changes may impact placement. Commonly used in electronics, robotics, machine tools, and medical devices.

Precision Adjusters

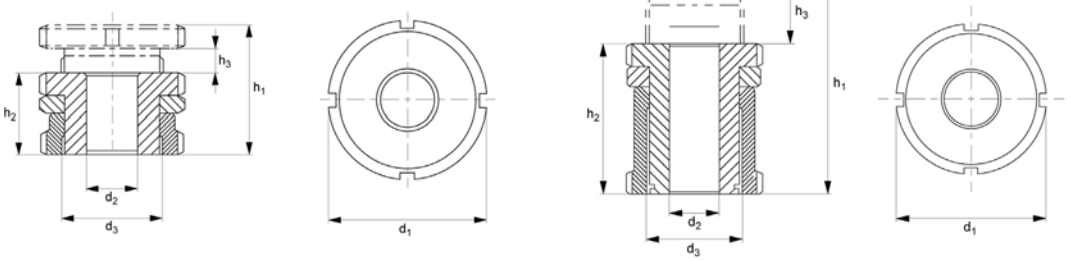



Part Number	Adjuster Type	For Bolt	h1	h2	h3	d1	Material
20202217	Standard	M4	19.0	15.0	4.0	25.0	Steel
20202224	Standard	M5	19.0	15.0	4.0	25.0	Steel
20200367	Standard	M6	19.0	15.0	4.0	25.0	Steel
20200374	Standard	M6	23.0	18.0	5.0	32.0	Steel
20200381	Standard	M8	23.0	18.0	5.0	32.0	Steel
20200398	Standard	M10	23.0	18.0	5.0	32.0	Steel
20200404	Standard	M10	29.0	22.0	7.0	45.0	Steel
20201241	Standard	M12	29.0	22.0	7.0	45.0	Steel
20200411	Standard	M16	29.0	22.0	7.0	45.0	Steel
20200428	Standard	M16	37.0	28.0	9.0	58.0	Steel
20200435	Standard	M20	37.0	28.0	9.0	58.0	Steel
20200442	Standard	M24	37.0	28.0	9.0	58.0	Steel
20202231	Standard	M20	43.0	33.0	10.0	70.0	Steel
20200459	Standard	M24	43.0	33.0	10.0	70.0	Steel
20202248	Standard	M30	43.0	33.0	10.0	70.0	Steel
20199609	Standard	M4	19.0	15.0	4.0	25.0	Stainless Steel
20199616	Standard	M5	19.0	15.0	4.0	25.0	Stainless Steel
20201296	Standard	M6	19.0	15.0	4.0	25.0	Stainless Steel
20201302	Standard	M6	23.0	18.0	5.0	32.0	Stainless Steel
20201319	Standard	M8	23.0	18.0	5.0	32.0	Stainless Steel
20201326	Standard	M10	23.0	18.0	5.0	32.0	Stainless Steel

Precision Adjusters

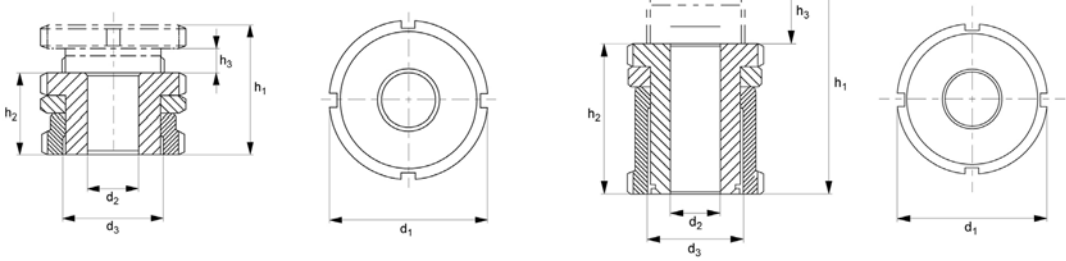



Part Number	Adjuster Type	For Bolt	h1	h2	h3	d1	Material
20201333	Standard	M10	29.0	22.0	7.0	45.0	Stainless Steel
20201340	Standard	M12	29.0	22.0	7.0	45.0	Stainless Steel
20201357	Standard	M16	29.0	22.0	7.0	45.0	Stainless Steel
20201364	Standard	M16	37.0	28.0	9.0	58.0	Stainless Steel
20201371	Standard	M20	37.0	28.0	9.0	58.0	Stainless Steel
20201388	Standard	M24	37.0	28.0	9.0	58.0	Stainless Steel
20199593	Standard	M20	43.0	33.0	10.0	70.0	Stainless Steel
20202149	Standard	M24	43.0	33.0	10.0	70.0	Stainless Steel
20199623	Standard	M30	43.0	33.0	10.0	70.0	Stainless Steel
20199630	With Locknut	M4	24.0	20.0	4.0	25.0	Steel
20199647	With Locknut	M5	24.0	20.0	4.0	25.0	Steel
20199654	With Locknut	M6	24.0	20.0	4.0	25.0	Steel
20199661	With Locknut	M6	29.0	24.0	5.0	32.0	Steel
20199678	With Locknut	M8	29.0	24.0	5.0	32.0	Steel
20199685	With Locknut	M10	29.0	24.0	5.0	32.0	Steel
20199692	With Locknut	M10	36.0	29.0	7.0	45.0	Steel
20199708	With Locknut	M12	36.0	29.0	7.0	45.0	Steel
20199715	With Locknut	M16	36.0	29.0	7.0	45.0	Steel
20199722	With Locknut	M16	46.0	37.0	9.0	58.0	Steel
20199739	With Locknut	M20	46.0	37.0	9.0	58.0	Steel
20199746	With Locknut	M24	46.0	37.0	9.0	58.0	Steel

Precision Adjusters

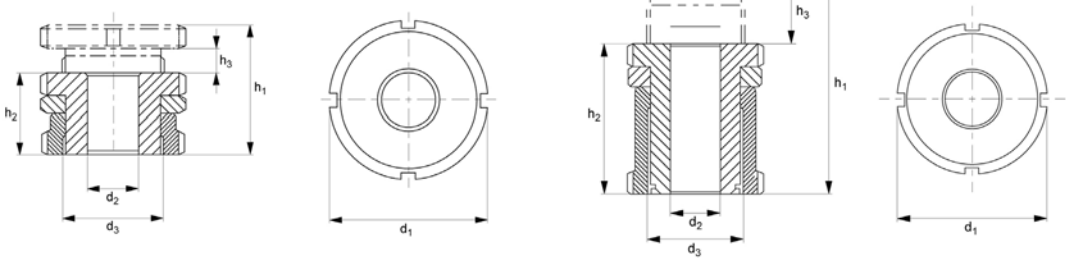



Part Number	Adjuster Type	For Bolt	h1	h2	h3	d1	Material
20199753	With Locknut	M20	54.0	44.0	10.0	70.0	Steel
20199760	With Locknut	M24	54.0	44.0	10.0	70.0	Steel
20199777	With Locknut	M30	54.0	44.0	10.0	70.0	Steel
20199784	With Locknut	M4	24.0	20.0	4.0	25.0	Stainless Steel
20199791	With Locknut	M5	24.0	20.0	4.0	25.0	Stainless Steel
20199807	With Locknut	M6	24.0	20.0	4.0	25.0	Stainless Steel
20199814	With Locknut	M6	29.0	24.0	5.0	32.0	Stainless Steel
20199821	With Locknut	M8	29.0	24.0	5.0	32.0	Stainless Steel
20199838	With Locknut	M10	29.0	24.0	5.0	32.0	Stainless Steel
20199845	With Locknut	M10	36.0	29.0	7.0	45.0	Stainless Steel
20199852	With Locknut	M12	36.0	29.0	7.0	45.0	Stainless Steel
20199869	With Locknut	M16	36.0	29.0	7.0	45.0	Stainless Steel
20199876	With Locknut	M16	46.0	37.0	9.0	58.0	Stainless Steel
20199883	With Locknut	M20	46.0	37.0	9.0	58.0	Stainless Steel
20199890	With Locknut	M24	46.0	37.0	9.0	58.0	Stainless Steel
20199906	With Locknut	M20	54.0	44.0	10.0	70.0	Stainless Steel
20199913	With Locknut	M24	54.0	44.0	10.0	70.0	Stainless Steel
20199920	With Locknut	M30	54.0	44.0	10.0	70.0	Steel
20202279	Standard	M4	43.0	28.0	15.0	25.0	Steel
20202286	Standard	M5	43.0	28.0	15.0	25.0	Steel
20200565	Standard	M6	43.0	28.0	15.0	25.0	Steel

Precision Adjusters

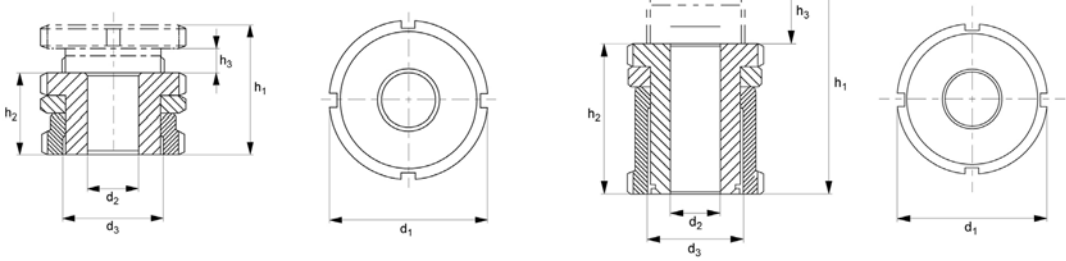



Part Number	Adjuster Type	For Bolt	h1	h2	h3	d1	Material
20200572	Standard	M6	55.0	35.0	20.0	32.0	Steel
20200589	Standard	M8	55.0	35.0	20.0	32.0	Steel
20200596	Standard	M10	55.0	35.0	20.0	32.0	Steel
20200602	Standard	M10	67.0	42.0	25.0	45.0	Steel
20200619	Standard	M12	67.0	42.0	25.0	45.0	Steel
20200626	Standard	M16	67.0	42.0	25.0	45.0	Steel
20200633	Standard	M16	86.0	54.0	32.0	58.0	Steel
20200640	Standard	M20	86.0	54.0	32.0	58.0	Steel
20200657	Standard	M24	86.0	54.0	32.0	58.0	Steel
20200664	Standard	M20	106.0	66.0	40.0	70.0	Steel
20200671	Standard	M24	106.0	66.0	40.0	70.0	Steel
20200688	Standard	M30	106.0	66.0	40.0	70.0	Steel
20200251	Standard	M4	43.0	28.0	15.0	25.0	Stainless Steel
20200268	Standard	M5	43.0	28.0	15.0	25.0	Stainless Steel
20201524	Standard	M6	43.0	28.0	15.0	25.0	Stainless Steel
20201531	Standard	M6	55.0	35.0	20.0	32.0	Stainless Steel
20201548	Standard	M8	55.0	35.0	20.0	32.0	Stainless Steel
20201555	Standard	M10	55.0	35.0	20.0	32.0	Stainless Steel
20201562	Standard	M10	67.0	42.0	25.0	45.0	Stainless Steel
20201579	Standard	M12	67.0	42.0	25.0	45.0	Stainless Steel
20201586	Standard	M16	67.0	42.0	25.0	45.0	Stainless Steel

Precision Adjusters

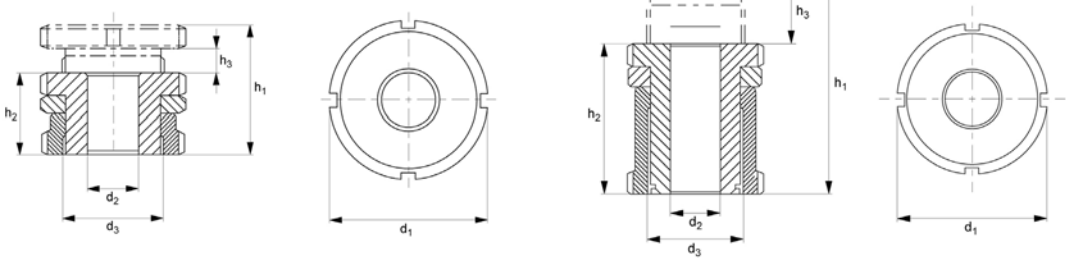



Part Number	Adjuster Type	For Bolt	h1	h2	h3	d1	Material
20201593	Standard	M16	86.0	54.0	32.0	58.0	Stainless Steel
20201609	Standard	M20	86.0	54.0	32.0	58.0	Stainless Steel
20201616	Standard	M24	86.0	54.0	32.0	58.0	Stainless Steel
20201623	Standard	M20	106.0	66.0	40.0	70.0	Stainless Steel
20201630	Standard	M24	106.0	66.0	40.0	70.0	Stainless Steel
20201647	Standard	M30	106.0	66.0	40.0	70.0	Stainless Steel
20202293	With Locknut	M4	43.0	33.0	10.0	25.0	Steel
20202309	With Locknut	M5	43.0	33.0	10.0	25.0	Steel
20200695	With Locknut	M6	43.0	33.0	10.0	25.0	Steel
20200701	With Locknut	M6	55.0	41.0	14.0	32.0	Steel
20200718	With Locknut	M8	55.0	41.0	14.0	32.0	Steel
20202316	With Locknut	M10	55.0	41.0	14.0	32.0	Steel
20200725	With Locknut	M10	67.0	49.0	18.0	45.0	Steel
20200732	With Locknut	M12	67.0	49.0	18.0	45.0	Steel
20200749	With Locknut	M16	67.0	49.0	18.0	45.0	Steel
20200756	With Locknut	M16	86.0	63.0	23.0	58.0	Steel
20200763	With Locknut	M20	86.0	63.0	23.0	58.0	Steel
20200770	With Locknut	M24	86.0	63.0	23.0	58.0	Steel
20201227	With Locknut	M20	106.0	77.0	29.0	70.0	Steel
20200787	With Locknut	M24	106.0	77.0	29.0	70.0	Steel
20201210	With Locknut	M30	106.0	77.0	29.0	70.0	Steel

Precision Adjusters

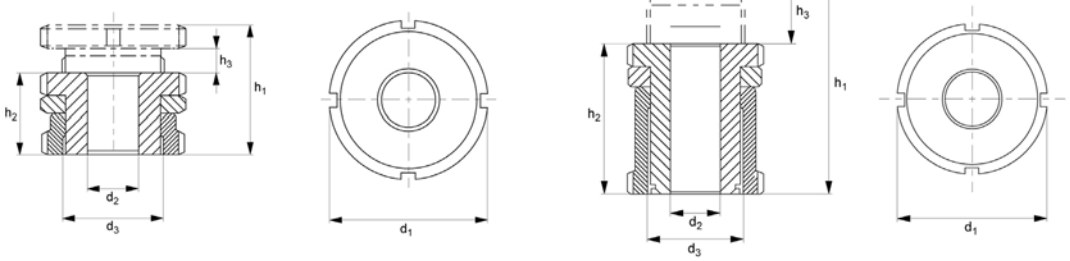



Part Number	Adjuster Type	For Bolt	h1	h2	h3	d1	Material
20200275	With Locknut	M4	43.0	33.0	10.0	25.0	Stainless Steel
20200282	With Locknut	M5	43.0	33.0	10.0	25.0	Stainless Steel
20201654	With Locknut	M6	43.0	33.0	10.0	25.0	Stainless Steel
20201661	With Locknut	M6	55.0	41.0	14.0	32.0	Stainless Steel
20201678	With Locknut	M8	55.0	41.0	14.0	32.0	Stainless Steel
20202156	With Locknut	M10	55.0	41.0	14.0	32.0	Stainless Steel
20200299	With Locknut	M10	67.0	49.0	18.0	45.0	Stainless Steel
20201685	With Locknut	M12	67.0	49.0	18.0	45.0	Stainless Steel
20201692	With Locknut	M16	67.0	49.0	18.0	45.0	Stainless Steel
20201708	With Locknut	M16	86.0	63.0	23.0	58.0	Stainless Steel
20202163	With Locknut	M20	86.0	63.0	23.0	58.0	Stainless Steel
20201715	With Locknut	M24	86.0	63.0	23.0	58.0	Stainless Steel
20202170	With Locknut	M20	106.0	77.0	29.0	70.0	Stainless Steel
20201722	With Locknut	M24	106.0	77.0	29.0	70.0	Stainless Steel
20201739	With Locknut	M30	106.0	77.0	29.0	70.0	Stainless Steel

Precision Adjusters - Tilt Head

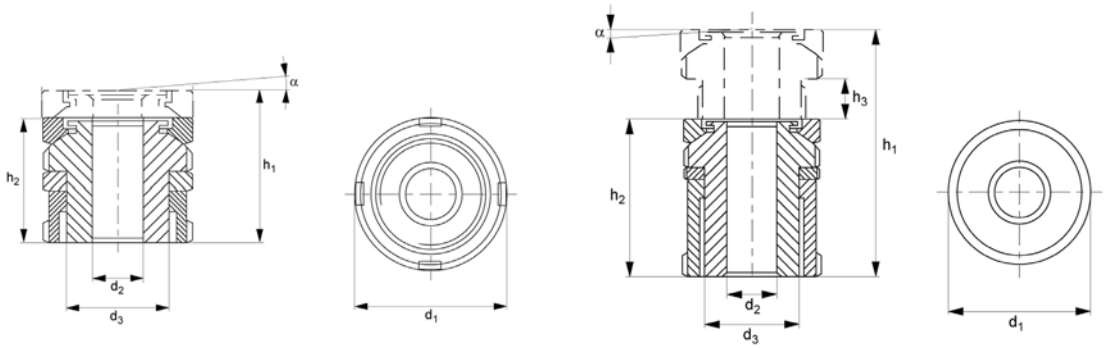



Features

- Once adjusted, it retains its position, ensuring steadiness during operation.
- Designed for applications with limited space.
- Used in electronics, robotics, machine tools, and medical equipment.

Specifications

Material: Stainless Steel, Steel

These Tilt Head Precision Adjusters provide fine-tuning capabilities, allowing for exact item positioning, alignment, or calibration. The tilt mechanism is the adjusters heart, allowing for exact angular adjustment of the mounting platform.

They are designed for applications with limited space and may be modified to provide optimal performance and desired outcomes.

Once adjusted, it retains its position, ensuring steadiness during operation. This is especially important when vibrations, external forces, or temperature changes may affect installation. Commonly found in electronics, robotics, machine tools, and medical equipment.

Precision Adjusters - Tilt Head

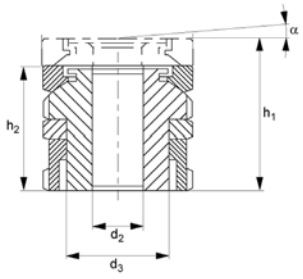

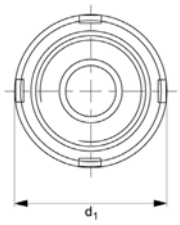

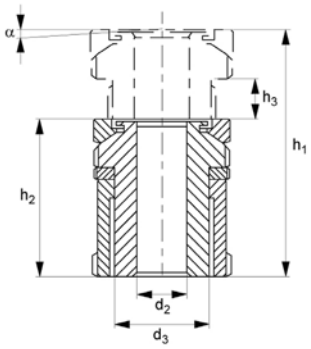

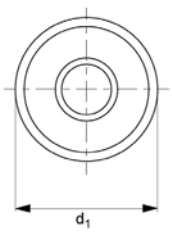



Part Number	For Bolt	h1	h2	d1	d2	d3	Material
20202255	M4	26.0	22.0	25.0	4.5	M15x1.0	Steel
20202262	M5	26.0	22.0	25.0	5.5	M15x1.0	Steel
20200466	M6	26.0	22.0	25.0	6.6	M15x1.0	Steel
20200473	M6	31.0	26.0	32.0	6.6	M20x1.0	Steel
20200480	M8	31.0	26.0	32.0	9.0	M20x1.0	Steel
20200497	M10	31.0	26.0	32.0	11.0	M20x1.0	Steel
20201197	M10	41.0	34.0	45.0	11.0	M30x1.5	Steel
20201234	M12	41.0	34.0	45.0	13.5	M30x1.5	Steel
20200503	M16	41.0	34.0	45.0	17.5	M30x1.5	Steel
20201203	M16	53.0	44.0	58.0	17.5	M40x1.5	Steel
20200510	M20	53.0	44.0	58.0	22.0	M40x1.5	Steel
20200527	M24	53.0	44.0	58.0	26.0	M40x1.5	Steel
20200534	M20	60.0	50.0	70.0	22.0	M50x1.5	Steel
20200541	M24	60.0	50.0	70.0	26.0	M50x1.5	Steel
20200558	M30	60.0	50.0	70.0	33.0	M50x1.5	Steel
20199937	M4	26.0	22.0	25.0	4.5	M15x1.0	Stainless Steel
20199944	M5	26.0	22.0	25.0	5.5	M15x1.0	Stainless Steel
20201395	M6	26.0	22.0	25.0	6.6	M15x1.0	Stainless Steel
20201401	M6	31.0	26.0	32.0	6.6	M20x1.0	Stainless Steel
20201418	M8	31.0	26.0	32.0	9.0	M20x1.0	Stainless Steel
20201425	M10	31.0	26.0	32.0	11.0	M20x1.0	Stainless Steel

Precision Adjusters - Tilt Head

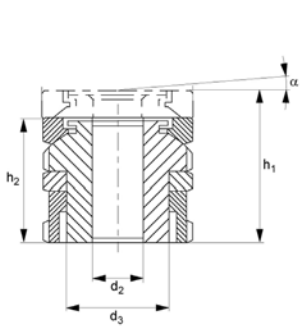

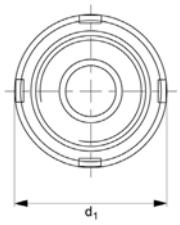

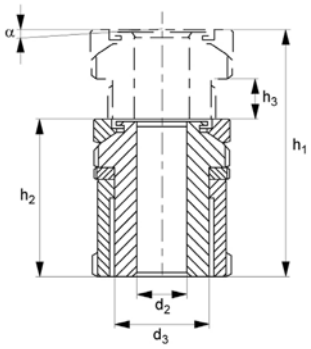

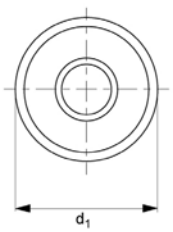



Part Number	For Bolt	h1	h2	d1	d2	d3	Material
20201432	M10	41.0	34.0	45.0	11.0	M30x1.5	Stainless Steel
20201449	M12	41.0	34.0	45.0	13.5	M30x1.5	Stainless Steel
20201456	M16	41.0	34.0	45.0	17.5	M30x1.5	Stainless Steel
20201463	M16	53.0	44.0	58.0	17.5	M40x1.5	Stainless Steel
20201470	M20	53.0	44.0	58.0	22.0	M40x1.5	Stainless Steel
20201487	M24	53.0	44.0	58.0	26.0	M40x1.5	Stainless Steel
20201494	M20	60.0	50.0	70.0	22.0	M50x1.5	Stainless Steel
20201500	M24	60.0	50.0	70.0	26.0	M50x1.5	Stainless Steel
20201517	M30	60.0	50.0	70.0	33	M50x1.5	Stainless Steel
20199951	M4	31.0	27.0	25.0	4.5	M15x1.0	Steel
20199968	M5	31.0	27.0	25.0	5.5	M15x1.0	Steel
20199975	M6	31.0	27.0	25.0	6.6	M15x1.0	Steel
20199982	M6	37.0	32.0	32.0	6.6	M20x1.0	Steel
20199999	M8	37.0	32.0	32.0	9.0	M20x1.0	Steel
20200008	M10	37.0	32.0	32.0	11.0	M20x1.0	Steel
20200015	M10	48.0	41.0	45.0	11.0	M30x1.5	Steel
20200022	M12	48.0	41.0	45.0	13.5	M30x1.5	Steel
20200039	M16	48.0	41.0	45.0	17.5	M30x1.5	Steel
20200046	M16	62.0	53.0	58.0	17.5	M40x1.5	Steel
20200053	M20	62.0	53.0	58.0	22.0	M40x1.5	Steel
20200060	M24	62.0	53.0	58.0	26.0	M40x1.5	Steel

Precision Adjusters - Tilt Head

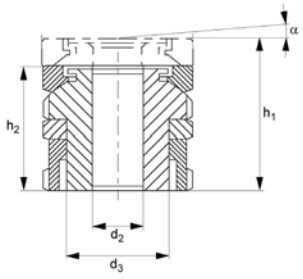

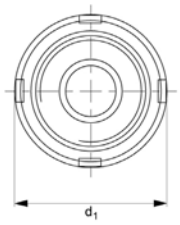

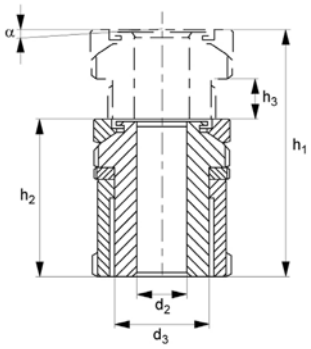

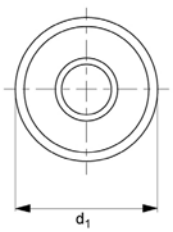



Part Number	For Bolt	h1	h2	d1	d2	d3	Material
20200077	M20	71.0	61.0	70.0	26.0	M50x1.5	Steel
20200084	M24	71.0	61.0	70.0	33.0	M50x1.5	Steel
20200091	M30	71.0	61.0	70.0	39.0	M50x1.5	Steel
20200107	M4	31.0	27.0	25.0	4.5	M15x1.0	Stainless Steel
20200114	M5	31.0	27.0	25.0	5.5	M15x1.0	Stainless Steel
20200121	M6	31.0	27.0	25.0	6.6	M15x1.0	Stainless Steel
20200138	M6	37.0	32.0	32.0	6.6	M20x1.0	Stainless Steel
20200145	M8	37.0	32.0	32.0	9.0	M20x1.0	Stainless Steel
20200152	M10	37.0	32.0	32.0	11.0	M20x1.0	Stainless Steel
20200169	M10	48.0	41.0	45.0	11.0	M30x1.5	Stainless Steel
20200176	M12	48.0	41.0	45.0	13.5	M30x1.5	Stainless Steel
20200183	M16	48.0	41.0	45.0	17.5	M30x1.5	Stainless Steel
20200190	M16	62.0	53.0	58.0	17.5	M40x1.5	Stainless Steel
20200206	M20	62.0	53.0	58.0	22.0	M40x1.5	Stainless Steel
20200213	M24	62.0	53.0	58.0	26.0	M40x1.5	Stainless Steel
20200220	M20	71.0	61.0	70.0	26.0	M50x1.5	Stainless Steel
20200237	M24	71.0	61.0	70.0	33.0	M50x1.5	Stainless Steel
20200244	M30	71.0	61.0	70.0	39	M50x1.5	Stainless Steel
20200794	M4	35.0	50.0	25.0	4.5	M15x1.0	Steel
20200800	M5	35.0	50.0	25.0	5.5	M15x1.0	Steel
20200817	M6	35.0	50.0	25.0	6.6	M15x1.0	Steel

Precision Adjusters - Tilt Head

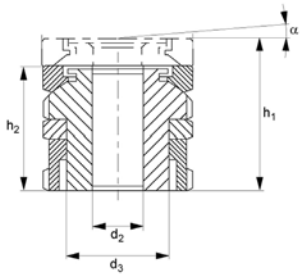

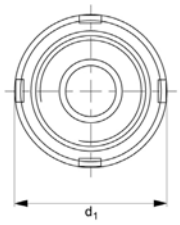

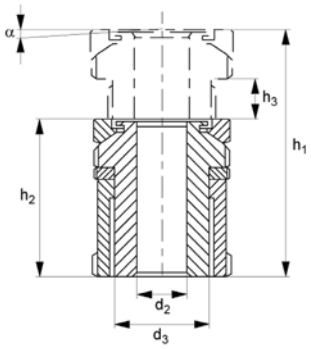

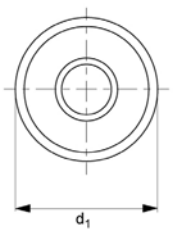



Part Number	For Bolt	h1	h2	d1	d2	d3	Material
20200824	M6	43.0	63.0	32.0	6.6	M20x1.0	Steel
20201265	M8	43.0	63.0	32.0	9.0	M20x1.0	Steel
20200831	M10	43.0	63.0	32.0	11.0	M20x1.0	Steel
20200848	M10	54.0	79.0	45.0	11.0	M30x1.5	Steel
20200855	M12	54.0	79.0	45.0	13.5	M30x1.5	Steel
20200862	M16	54.0	79.0	45.0	17.5	M30x1.5	Steel
20200879	M16	70.0	102.0	58.0	22.0	M40x1.5	Steel
20200886	M20	70.0	102.0	58.0	26.0	M40x1.5	Steel
20200893	M24	70.0	102.0	58.0	26.0	M40x1.5	Steel
20200909	M20	83.0	123.0	70.0	22.0	M50x1.5	Steel
20200916	M24	83.0	123.0	70.0	26.0	M50x1.5	Steel
20200923	M30	83.0	123.0	70.0	33.0	M50x1.5	Steel
20201746	M4	35.0	50.0	25.0	4.5	M15x1.0	Stainless Steel
20201753	M5	35.0	50.0	25.0	5.5	M15x1.0	Stainless Steel
20201760	M6	35.0	50.0	25.0	6.6	M15x1.0	Stainless Steel
20201777	M6	43.0	63.0	32.0	6.6	M20x1.0	Stainless Steel
20202187	M8	43.0	63.0	32.0	9.0	M20x1.0	Stainless Steel
20201784	M10	43.0	63.0	32.0	11.0	M20x1.0	Stainless Steel
20200305	M10	54.0	79.0	45.0	11.0	M30x1.5	Stainless Steel
20201791	M12	54.0	79.0	45.0	13.5	M30x1.5	Stainless Steel
20201807	M16	54.0	79.0	45.0	17.5	M30x1.5	Stainless Steel

Precision Adjusters - Tilt Head

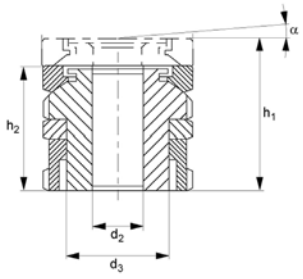

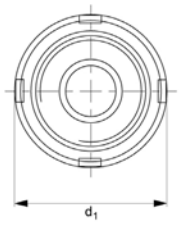

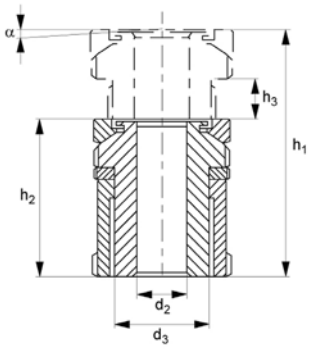

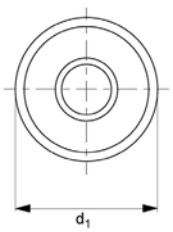



Part Number	For Bolt	h1	h2	d1	d2	d3	Material
20201814	M16	70.0	102.0	58.0	22.0	M40x1.5	Stainless Steel
20201821	M20	70.0	102.0	58.0	26.0	M40x1.5	Stainless Steel
20201838	M24	70.0	102.0	58.0	26.0	M40x1.5	Stainless Steel
20202194	M20	83.0	123.0	70.0	22.0	M50x1.5	Stainless Steel
20201845	M24	83.0	123.0	70.0	26.0	M50x1.5	Stainless Steel
20201852	M30	83.0	123.0	70.0	33	M50x1.5	Stainless Steel
20200930	M4	50.0	35.0	25.0	4.5	M15x1.0	Steel
20200947	M5	50.0	35.0	25.0	5.5	M15x1.0	Steel
20200954	M6	50.0	35.0	25.0	6.5	M15x1.0	Steel
20200961	M6	63.0	43.0	32.0	6.6	M20x1.0	Steel
20201272	M8	63.0	43.0	32.0	9.0	M20x1.0	Steel
20200978	M10	63.0	43.0	32.0	11.0	M20x1.0	Steel
20200985	M10	79.0	54.0	45.0	11.0	M30x1.5	Steel
20200992	M12	79.0	54.0	45.0	13.5	M30x1.5	Steel
20201005	M16	79.0	54.0	45.0	17.5	M30x1.5	Steel
20201012	M16	102.0	70.0	58.0	17.5	M40x1.5	Steel
20201029	M20	102.0	70.0	58.0	22.0	M40x1.5	Steel
20201036	M24	102.0	70.0	58.0	26.0	M40x1.5	Steel
20201043	M20	123.0	80.0	70.0	22.0	M50x1.5	Steel
20201050	M24	123.0	80.0	70.0	26.0	M50x1.5	Steel
20201067	M30	123.0	80.0	70.0	33.0	M50x1.5	Steel

Precision Adjusters - Tilt Head

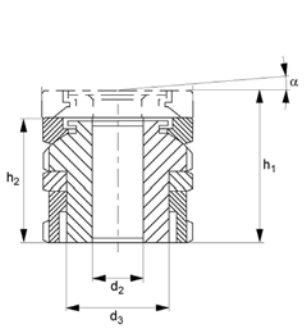

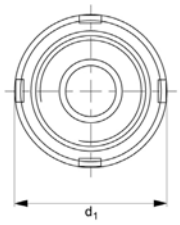

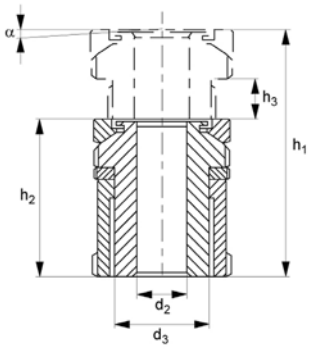

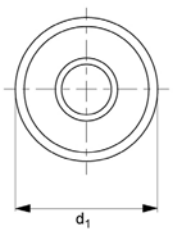



Part Number	For Bolt	h1	h2	d1	d2	d3	Material
20201869	M4	50.0	35.0	25.0	4.5	M15x1.0	Stainless Steel
20201876	M5	50.0	35.0	25.0	5.5	M15x1.0	Stainless Steel
20201883	M6	50.0	35.0	25.0	6.5	M15x1.0	Stainless Steel
20201890	M6	63.0	43.0	32.0	6.6	M20x1.0	Stainless Steel
20202200	M8	63.0	43.0	32.0	9.0	M20x1.0	Stainless Steel
20201906	M10	63.0	43.0	32.0	11.0	M20x1.0	Stainless Steel
20201913	M10	79.0	54.0	45.0	11.0	M30x1.5	Stainless Steel
20201920	M12	79.0	54.0	45.0	13.5	M30x1.5	Stainless Steel
20201937	M16	79.0	54.0	45.0	17.5	M30x1.5	Stainless Steel
20201944	M16	102.0	70.0	58.0	17.5	M40x1.5	Stainless Steel
20201951	M20	102.0	70.0	58.0	22.0	M40x1.5	Stainless Steel
20201968	M24	102.0	70.0	58.0	26.0	M40x1.5	Stainless Steel
20201975	M20	123.0	80.0	70.0	22.0	M50x1.5	Stainless Steel
20201982	M24	123.0	80.0	70.0	26.0	M50x1.5	Stainless Steel
20201999	M30	123.0	80.0	70.0	33	M50x1.5	Stainless Steel

Spacers

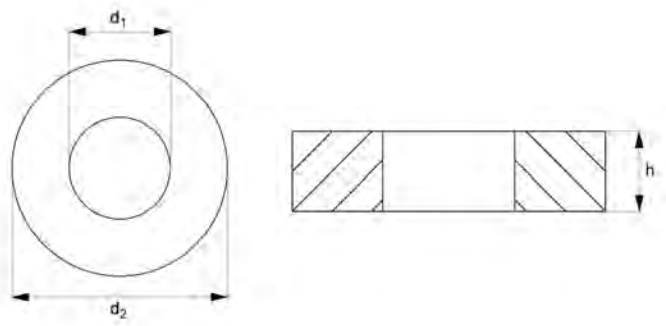



Features

- It bridges gaps in applications when the height adjustment is insufficient.
- It aids in the equal distribution of loads and pressures.
- Used in automotive, industrial machinery, and electrical devices.

Specifications

Material: Stainless Steel, Steel

These Spacers are used to bridge gaps in applications when the height adjustment is insufficient. They offer the appropriate clearance and alignment to components that may not be completely perpendicular or parallel.

It generates a gap or distance by improving the application's performance, dependability, and lifetime. It aids in the equal distribution of loads and pressures, lowering the possibility of stress concentrations or premature wear, and is essential in applications involving vibrations or movement.

They are easy to install and are frequently utilised in heavy-load applications such as automotive, industrial machinery, and electrical devices.

Spacers

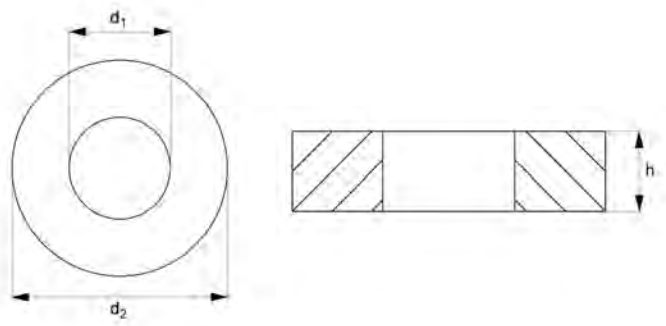



Part Number	For Bolt	d1	d2	h	Material
20201258	M6	6.6	25.0	4.0	Steel
20201135	M10	11.0	32.0	5.0	Steel
20201142	M16	17.5	45.0	6.0	Steel
20201159	M24	26.0	58.0	8.0	Steel
20201166	M30	33.0	70.0	10.0	Steel
20201173	M36	39.0	80.0	12.0	Steel
20201180	M48	52.0	105.0	16.0	Steel
20202071	M6	6.6	25.0	4.0	Stainless Steel
20202088	M10	11.0	32.0	5.0	Stainless Steel
20202095	M16	17.5	45.0	6.0	Stainless Steel
20202101	M24	26.0	58.0	8.0	Stainless Steel
20202118	M30	33.0	70.0	10.0	Stainless Steel
20202125	M36	39.0	80.0	12.0	Stainless Steel
20202132	M48	52.0	105.0	16.0	Stainless Steel

Spacers for One Touch Fasteners

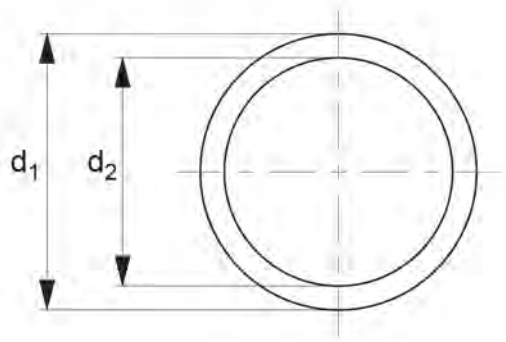



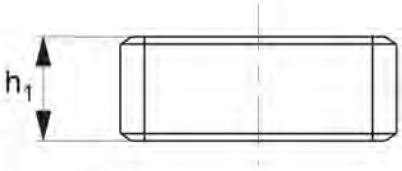

Features

- These Spacers are designed to be used with one-touch fasteners. It adapts the thread length of the one-touch fastener to different thread lengths on mounting panels of varying thicknesses.
- Offers protection or insulation between pieces that may come into touch during operation, preventing damage, abrasion, or electrical conductivity.
- Used in a wide range of industrial applications, including automotive, electronic systems, machinery and construction.

Specifications

Material: Stainless Steel

These Spacers are designed to be used with one-touch fasteners. It adapts the thread length of the one-touch fastener to different thread lengths on mounting panels of varying thicknesses.

It allows components to move and reduces the force required to engage the fastener. It can also offer protection or insulation between pieces that may come into touch during operation, preventing damage, abrasion, or electrical conductivity.

It is easy to install and remove due to its cylindrical shape and serves as vibration dampening. These are widely used in a wide range of industrial applications, including automotive, electronic systems, machinery and construction.

Spacers for One Touch Fasteners

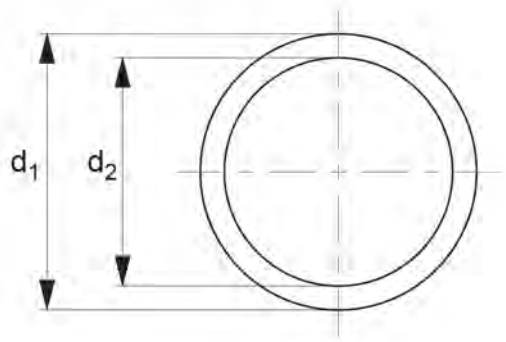



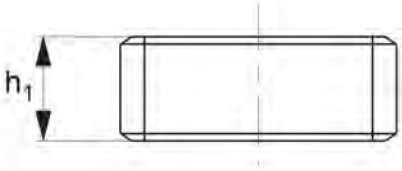

Part Number	d1	d2	h1	For single panel thick-ness	Material
20190705	19.0	16.0	4.0	6.0	Stainless Steel
20190552	19.0	16.0	5.0	5.0	Stainless Steel
20190712	19.0	16.0	6.0	4.0	Stainless Steel
20190729	19.0	16.0	7.0	3.0	Stainless Steel

Ball Shim Levellers

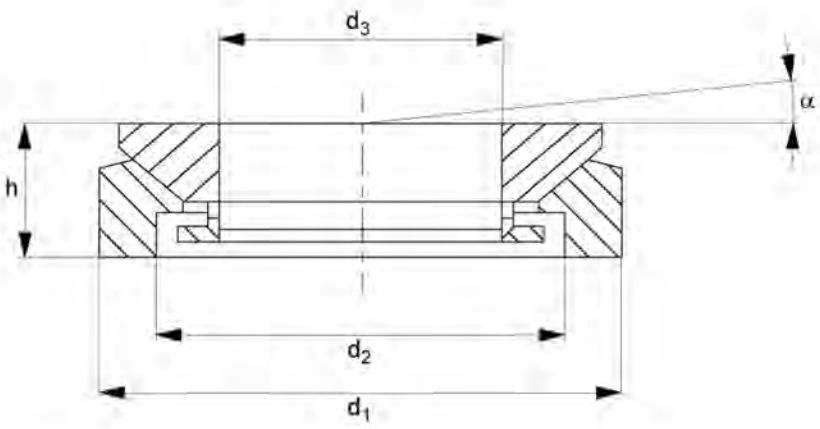



Features

- It has a maximum tilt angle of 4 and is intended to compensate for uneven surfaces.
- It has a fine-threaded mounting bolt, a threaded base nut, and an end-stop.
- Used in engines, machinery, laboratory equipment and defence manufacturing.

Specifications

Material: Stainless Steel, Zinc Plated Steel

These Ball Shim Levellers have a maximum tilt angle of 4 and are intended to compensate for uneven surfaces. They are adjustable and re-adjustable for optimal precision and vertical alignment of your applications.

It has three features: a fine-threaded mounting bolt, a threaded base nut, and an end-stop. The mounting bolt and base's fine thread allow for precision adjustment and simple re-adjustment using a hook spanner.

It is simple and quick to install, and it is suited for usage with heavy loads, both static and dynamic. Commonly used in engines, machinery, laboratory equipment and defence manufacturing.

Ball Shim Levellers

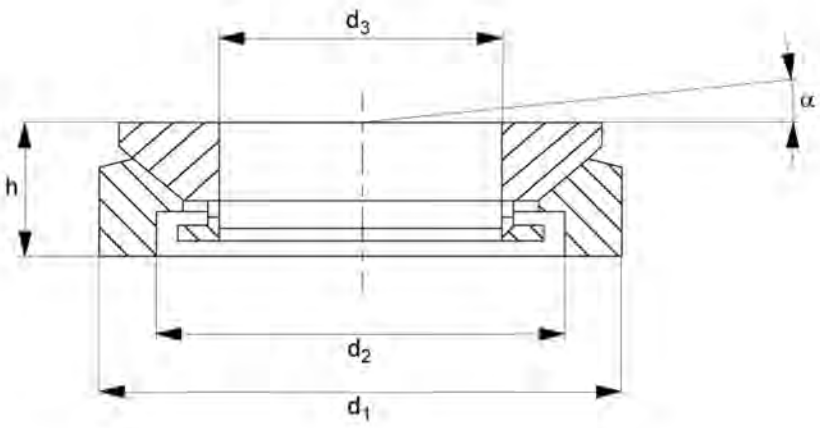



Part Number	For Bolt	d1	d2	d3	h	Material
20201074	M6	25.0	15.0	8.5	8.0	Zinc Plated Steel
20201289	M10	32.0	20.0	13.0	10.0	Zinc Plated Steel
20201081	M16	45.0	30.0	20.0	12.5	Zinc Plated Steel
20201098	M24	58.0	38.0	29.0	16.0	Zinc Plated Steel
20201104	M30	70.0	48.0	36.0	20.0	Zinc Plated Steel
20201111	M36	80.0	61.0	44.0	20.0	Zinc Plated Steel
20201128	M48	105.0	78.0	58.0	25.0	Zinc Plated Steel
20202002	M6	25.0	15.0	8.5	8.0	Stainless Steel
20202019	M10	32.0	20.0	13.0	10.0	Stainless Steel
20202026	M16	45.0	30.0	20.0	12.5	Stainless Steel
20202033	M24	58.0	38.0	29.0	16.0	Stainless Steel
20202040	M30	70.0	48.0	36.0	20.0	Stainless Steel
20202057	M36	80.0	61.0	44.0	20.0	Stainless Steel
20202064	M48	105.0	78.0	58.0	25.0	Stainless Steel

Vented Countersunk Machine Screws

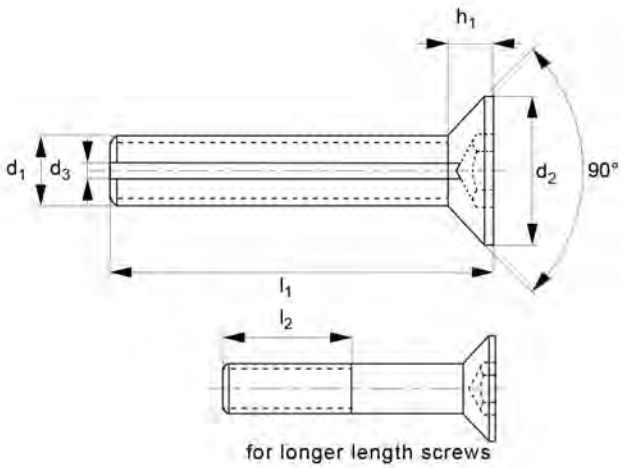

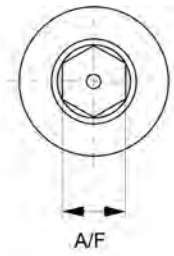



Features

- Their centre vent feature reduces virtual leakage from high vacuum systems.
- Ideally suited for usage in sealed enclosures, housings, and machinery.
- Hexagonal drives are suitable for precision assembling.

Specifications

Material: 316 Stainless Steel, 304 Stainless Steel

Vented screws are fasteners with a hole drilled through the middle that allow gases trapped at the bottom of a blind threaded hole to escape through the core and provide airflow within an application. The screws are a common option for HV and UHV systems because their centre vent feature reduces virtual leakage from high vacuum systems.

This range of Vented Screws features a countersunk machine head with a hexagonal drive. Hexagonal drives are suitable for precision assembling and when there is limited surface area. They are made from Stainless Steel.

Vented Countersunk Machine Screws

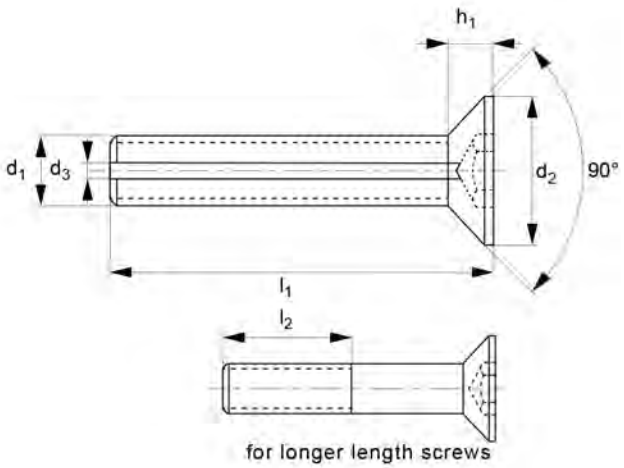

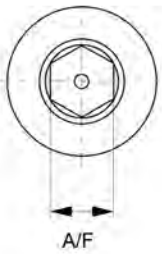



Part Number	l1	d1	d2	D3	H1	l2	A/F	Material
20235970	4.0	M2	3.8	0.8	1.3		1.3	304 Stainless Steel
20238469	40.0	M16	30.0	1.8	7.5	38.0	10.0	304 Stainless Steel
20239183	40.0	M16	30.0	1.8	7.5	38.0	10.0	316 Stainless Steel
20238476	45.0	M16	30.0	1.8	7.5	38.0	10.0	304 Stainless Steel
20239190	45.0	M16	30.0	1.8	7.5	38.0	10.0	316 Stainless Steel
20238483	50.0	M16	30.0	1.8	7.5	38.0	10.0	304 Stainless Steel
20239206	50.0	M16	30.0	1.8	7.5	38.0	10.0	316 Stainless Steel
20238490	60.0	M16	30.0	1.8	7.5	38.0	10.0	304 Stainless Steel
20239213	60.0	M16	30.0	1.8	7.5	38.0	10.0	316 Stainless Steel
20238384	35.0	M12	24.0	1.8	6.5	30.0	8.0	304 Stainless Steel
20239107	35.0	M12	24.0	1.8	6.5	30.0	8.0	316 Stainless Steel
20238391	40.0	M12	24.0	1.8	6.5	30.0	8.0	304 Stainless Steel
20239114	40.0	M12	24.0	1.8	6.5	30.0	8.0	316 Stainless Steel
20238407	45.0	M12	24.0	1.8	6.5	30.0	8.0	304 Stainless Steel
20239121	45.0	M12	24.0	1.8	6.5	30.0	8.0	316 Stainless Steel
20238414	50.0	M12	24.0	1.8	6.5	30.0	8.0	304 Stainless Steel
20239138	50.0	M12	24.0	1.8	6.5	30.0	8.0	316 Stainless Steel
20238421	60.0	M12	24.0	1.8	6.5	30.0	8.0	304 Stainless Steel
20239145	60.0	M12	24.0	1.8	6.5	30.0	8.0	316 Stainless Steel
20238285	30.0	M10	20.0	1.8	5.5	26.0	6.0	304 Stainless Steel
20239008	30.0	M10	20.0	1.8	5.5	26.0	6.0	316 Stainless Steel
20238292	35.0	M10	20.0	1.8	5.5	26.0	6.0	304 Stainless Steel

Vented Countersunk Machine Screws

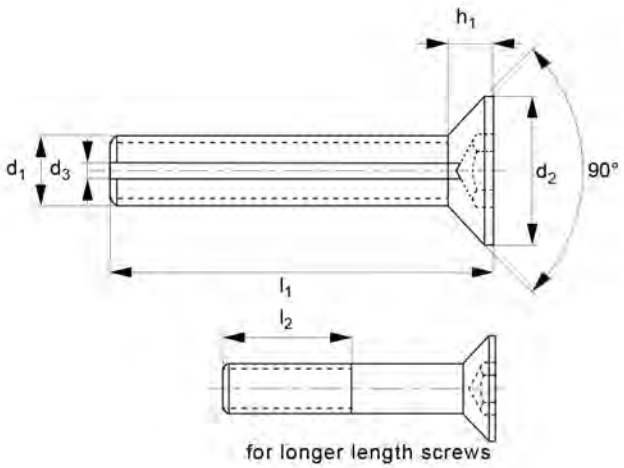

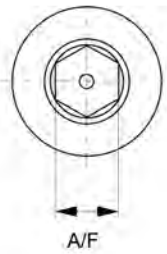



Part Number	l1	d1	d2	D3	H1	l2	A/F	Material
20239015	35.0	M10	20.0	1.8	5.5	26.0	6.0	316 Stainless Steel
20238308	40.0	M10	20.0	1.8	5.5	26.0	6.0	304 Stainless Steel
20239022	40.0	M10	20.0	1.8	5.5	26.0	6.0	316 Stainless Steel
20238315	45.0	M10	20.0	1.8	5.5	26.0	6.0	304 Stainless Steel
20239039	45.0	M10	20.0	1.8	5.5	26.0	6.0	316 Stainless Steel
20238322	50.0	M10	20.0	1.8	5.5	26.0	6.0	304 Stainless Steel
20239046	50.0	M10	20.0	1.8	5.5	26.0	6.0	316 Stainless Steel
20238339	55.0	M10	20.0	1.8	5.5	26.0	6.0	304 Stainless Steel
20239053	55.0	M10	20.0	1.8	5.5	26.0	6.0	316 Stainless Steel
20238346	60.0	M10	20.0	1.8	5.5	26.0	6.0	304 Stainless Steel
20239060	60.0	M10	20.0	1.8	5.5	26.0	6.0	316 Stainless Steel
20238186	25.0	M8	16.0	1.8	4.4	22.0	5.0	304 Stainless Steel
20238902	25.0	M8	16.0	1.8	4.4	22.0	5.0	316 Stainless Steel
20238193	30.0	M8	16.0	1.8	4.4	22.0	5.0	304 Stainless Steel
20238919	30.0	M8	16.0	1.8	4.4	22.0	5.0	316 Stainless Steel
20238209	35.0	M8	16.0	1.8	4.4	22.0	5.0	304 Stainless Steel
20238926	35.0	M8	16.0	1.8	4.4	22.0	5.0	316 Stainless Steel
20238216	40.0	M8	16.0	1.8	4.4	22.0	5.0	304 Stainless Steel
20238933	40.0	M8	16.0	1.8	4.4	22.0	5.0	316 Stainless Steel
20238223	45.0	M8	16.0	1.8	4.4	22.0	5.0	304 Stainless Steel
20238940	45.0	M8	16.0	1.8	4.4	22.0	5.0	316 Stainless Steel
20238230	50.0	M8	16.0	1.8	4.4	22.0	5.0	304 Stainless Steel

Vented Countersunk Machine Screws

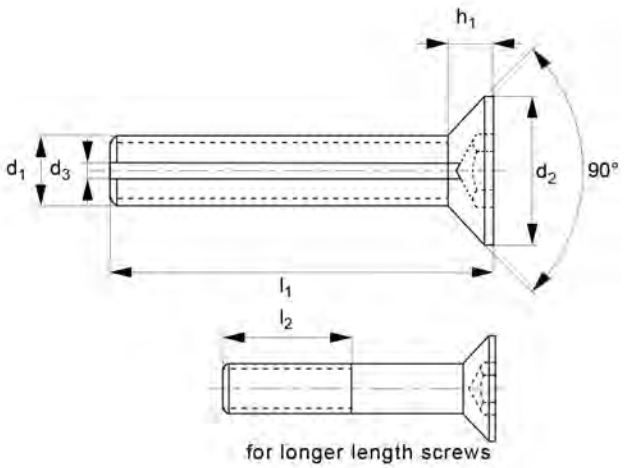

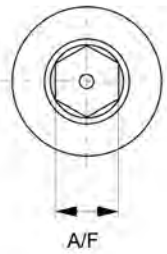



Part Number	l1	d1	d2	D3	H1	l2	A/F	Material
20238957	50.0	M8	16.0	1.8	4.4	22.0	5.0	316 Stainless Steel
20238247	55.0	M8	16.0	1.8	4.4	22.0	5.0	304 Stainless Steel
20238964	55.0	M8	16.0	1.8	4.4	22.0	5.0	316 Stainless Steel
20238087	20.0	M6	12.0	1.6	3.3	18.0	4.0	304 Stainless Steel
20238803	20.0	M6	12.0	1.6	3.3	18.0	4.0	316 Stainless Steel
20238094	25.0	M6	12.0	1.6	3.3	18.0	4.0	304 Stainless Steel
20238810	25.0	M6	12.0	1.6	3.3	18.0	4.0	316 Stainless Steel
20238100	30.0	M6	12.0	1.6	3.3	18.0	4.0	304 Stainless Steel
20238827	30.0	M6	12.0	1.6	3.3	18.0	4.0	316 Stainless Steel
20238117	35.0	M6	12.0	1.6	3.3	18.0	4.0	304 Stainless Steel
20238834	35.0	M6	12.0	1.6	3.3	18.0	4.0	316 Stainless Steel
20238124	40.0	M6	12.0	1.6	3.3	18.0	4.0	304 Stainless Steel
20238841	40.0	M6	12.0	1.6	3.3	18.0	4.0	316 Stainless Steel
20238131	45.0	M6	12.0	1.6	3.3	18.0	4.0	304 Stainless Steel
20238858	45.0	M6	12.0	1.6	3.3	18.0	4.0	316 Stainless Steel
20238148	50.0	M6	12.0	1.6	3.3	18.0	4.0	304 Stainless Steel
20238865	50.0	M6	12.0	1.6	3.3	18.0	4.0	316 Stainless Steel
20237998	20.0	M5	10.0	1.3	2.8	16.0	3.0	304 Stainless Steel
20238711	20.0	M5	10.0	1.3	2.8	16.0	3.0	316 Stainless Steel
20238001	25.0	M5	10.0	1.3	2.8	16.0	3.0	304 Stainless Steel
20238728	25.0	M5	10.0	1.3	2.8	16.0	3.0	316 Stainless Steel
20238018	30.0	M5	10.0	1.3	2.8	16.0	3.0	304 Stainless Steel

Vented Countersunk Machine Screws

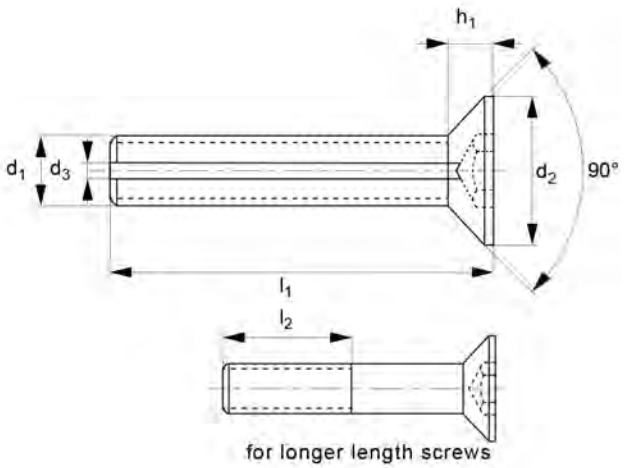

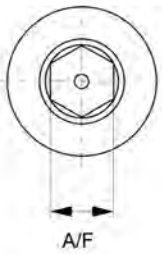



Part Number	l1	d1	d2	D3	H1	l2	A/F	Material
20238735	30.0	M5	10.0	1.3	2.8	16.0	3.0	316 Stainless Steel
20238025	35.0	M5	10.0	1.3	2.8	16.0	3.0	304 Stainless Steel
20238742	35.0	M5	10.0	1.3	2.8	16.0	3.0	316 Stainless Steel
20238032	40.0	M5	10.0	1.3	2.8	16.0	3.0	304 Stainless Steel
20238759	40.0	M5	10.0	1.3	2.8	16.0	3.0	316 Stainless Steel
20237899	16.0	M4	8.0	1.0	2.3	14.0	2.5	304 Stainless Steel
20238612	16.0	M4	8.0	1.0	2.3	14.0	2.5	316 Stainless Steel
20237905	20.0	M4	8.0	1.0	2.3	14.0	2.5	304 Stainless Steel
20238629	20.0	M4	8.0	1.0	2.3	14.0	2.5	316 Stainless Steel
20237912	25.0	M4	8.0	1.0	2.3	14.0	2.5	304 Stainless Steel
20238636	25.0	M4	8.0	1.0	2.3	14.0	2.5	316 Stainless Steel
20237929	30.0	M4	8.0	1.0	2.3	14.0	2.5	304 Stainless Steel
20238643	30.0	M4	8.0	1.0	2.3	14.0	2.5	316 Stainless Steel
20237936	35.0	M4	8.0	1.0	2.3	14.0	2.5	304 Stainless Steel
20238650	35.0	M4	8.0	1.0	2.3	14.0	2.5	316 Stainless Steel
20237837	16.0	M3	6.0	1.0	1.7	12.0	2.0	304 Stainless Steel
20238551	16.0	M3	6.0	1.0	1.7	12.0	2.0	316 Stainless Steel
20244606	4.0	M2	3.8	0.8	1.3		1.3	316 Stainless Steel
20244545	4.0	M2.5	4.8	0.9	1.9		1.5	304 Stainless Steel
20244651	4.0	M2.5	4.8	0.9	1.9		1.5	316 Stainless Steel
20244491	5.0	M2	3.8	0.8	1.3		1.3	304 Stainless Steel
20244613	5.0	M2	3.8	0.8	1.3		1.3	316 Stainless Steel

Vented Countersunk Machine Screws

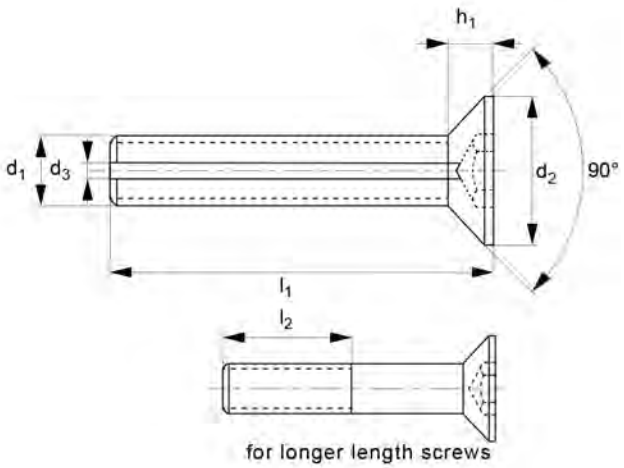

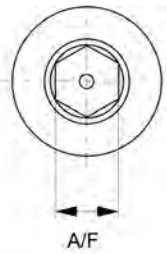



Part Number	l1	d1	d2	D3	H1	l2	A/F	Material
20244552	5.0	M2.5	4.8	0.9	1.9		1.5	304 Stainless Steel
20244668	5.0	M2.5	4.8	0.9	1.9		1.5	316 Stainless Steel
20237783	5.0	M3	6.0	1.0	1.7		2.0	304 Stainless Steel
20238506	5.0	M3	6.0	1.0	1.7		2.0	316 Stainless Steel
20237844	5.0	M4	8.0	1.0	2.3		2.5	304 Stainless Steel
20238568	5.0	M4	8.0	1.0	2.3		2.5	316 Stainless Steel
20244507	6.0	M2	3.8	0.8	1.3		1.3	304 Stainless Steel
20244620	6.0	M2	3.8	0.8	1.3		1.3	316 Stainless Steel
20244569	6.0	M2.5	4.8	0.9	1.9		1.5	304 Stainless Steel
20244675	6.0	M2.5	4.8	0.9	1.9		1.5	316 Stainless Steel
20237790	6.0	M3	6.0	1.0	1.7		2.0	304 Stainless Steel
20238513	6.0	M3	6.0	1.0	1.7		2.0	316 Stainless Steel
20237851	6.0	M4	8.0	1.0	2.3		2.5	304 Stainless Steel
20238575	6.0	M4	8.0	1.0	2.3		2.5	316 Stainless Steel
20237943	6.0	M5	10.0	1.3	2.8		3.0	304 Stainless Steel
20238667	6.0	M5	10.0	1.3	2.8		3.0	316 Stainless Steel
20244514	8.0	M2	3.8	0.8	1.3		1.3	304 Stainless Steel
20244637	8.0	M2	3.8	0.8	1.3		1.3	316 Stainless Steel
20244576	8.0	M2.5	4.8	0.9	1.9		1.5	304 Stainless Steel
20244682	8.0	M2.5	4.8	0.9	1.9		1.5	316 Stainless Steel
20237806	8.0	M3	6.0	1.0	1.7		2.0	304 Stainless Steel
20238520	8.0	M3	6.0	1.0	1.7		2.0	316 Stainless Steel

Vented Countersunk Machine Screws

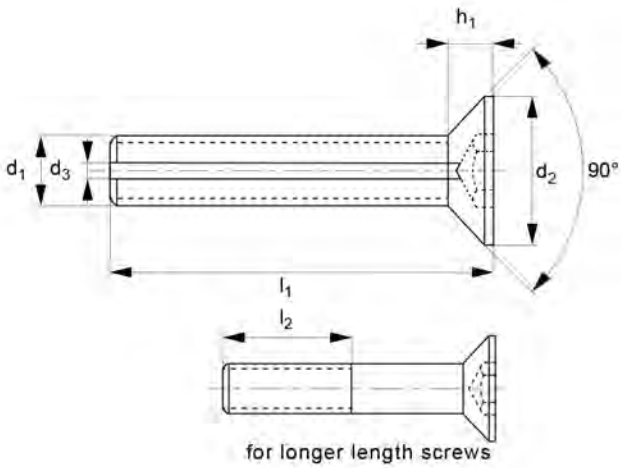

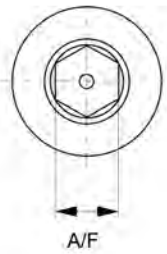



Part Number	l1	d1	d2	D3	H1	l2	A/F	Material
20237868	8.0	M4	8.0	1.0	2.3		2.5	304 Stainless Steel
20238582	8.0	M4	8.0	1.0	2.3		2.5	316 Stainless Steel
20237950	8.0	M5	10.0	1.3	2.8		3.0	304 Stainless Steel
20238674	8.0	M5	10.0	1.3	2.8		3.0	316 Stainless Steel
20238049	8.0	M6	12.0	1.6	3.3		4.0	304 Stainless Steel
20238766	8.0	M6	12.0	1.6	3.3		4.0	316 Stainless Steel
20244521	10.0	M2	3.8	0.8	1.3		1.3	304 Stainless Steel
20244644	10.0	M2	3.8	0.8	1.3		1.3	316 Stainless Steel
20244583	10.0	M2.5	4.8	0.9	1.9		1.5	304 Stainless Steel
20244699	10.0	M2.5	4.8	0.9	1.9		1.5	316 Stainless Steel
20237813	10.0	M3	6.0	1.0	1.7		2.0	304 Stainless Steel
20238537	10.0	M3	6.0	1.0	1.7		2.0	316 Stainless Steel
20237875	10.0	M4	8.0	1.0	2.3		2.5	304 Stainless Steel
20238599	10.0	M4	8.0	1.0	2.3		2.5	316 Stainless Steel
20237967	10.0	M5	10.0	1.3	2.8		3.0	304 Stainless Steel
20238681	10.0	M5	10.0	1.3	2.8		3.0	316 Stainless Steel
20238056	10.0	M6	12.0	1.6	3.3		4.0	304 Stainless Steel
20238773	10.0	M6	12.0	1.6	3.3		4.0	316 Stainless Steel
20244538	12.0	M2	3.8	0.8	1.3		1.3	304 Stainless Steel
20219888	12.0	M2	3.8	0.8	1.3		1.3	316 Stainless Steel
20244590	12.0	M2.5	4.8	0.9	1.9		1.5	304 Stainless Steel
20244705	12.0	M2.5	4.8	0.9	1.9		1.5	316 Stainless Steel

Vented Countersunk Machine Screws

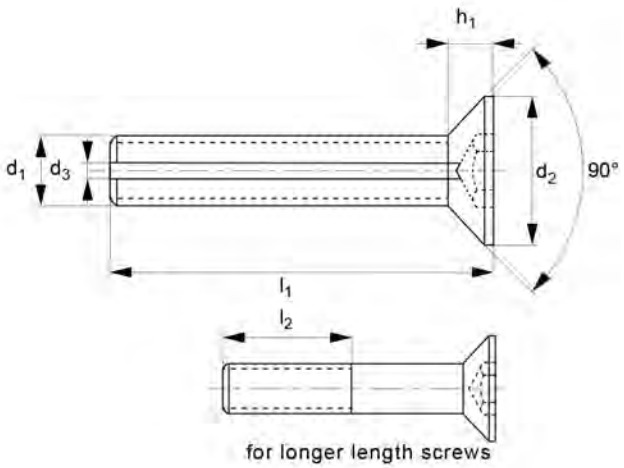

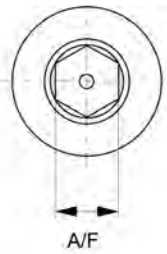



Part Number	l1	d1	d2	D3	H1	l2	A/F	Material
20237820	12.0	M3	6.0	1.0	1.7		2.0	304 Stainless Steel
20238544	12.0	M3	6.0	1.0	1.7		2.0	316 Stainless Steel
20237882	12.0	M4	8.0	1.0	2.3		2.5	304 Stainless Steel
20238605	12.0	M4	8.0	1.0	2.3		2.5	316 Stainless Steel
20237974	12.0	M5	10.0	1.3	2.8		3.0	304 Stainless Steel
20238698	12.0	M5	10.0	1.3	2.8		3.0	316 Stainless Steel
20238063	12.0	M6	12.0	1.6	3.3		4.0	304 Stainless Steel
20238780	12.0	M6	12.0	1.6	3.3		4.0	316 Stainless Steel
20238155	12.0	M8	16.0	1.8	4.4		5.0	304 Stainless Steel
20238872	12.0	M8	16.0	1.8	4.4		5.0	316 Stainless Steel
20237981	16.0	M5	10.0	1.3	2.8		3.0	304 Stainless Steel
20238704	16.0	M5	10.0	1.3	2.8		3.0	316 Stainless Steel
20238070	16.0	M6	12.0	1.6	3.3		4.0	304 Stainless Steel
20238797	16.0	M6	12.0	1.6	3.3		4.0	316 Stainless Steel
20238162	16.0	M8	16.0	1.8	4.4		5.0	304 Stainless Steel
20238889	16.0	M8	16.0	1.8	4.4		5.0	316 Stainless Steel
20238254	16.0	M10	20.0	1.8	5.5		6.0	304 Stainless Steel
20238971	16.0	M10	20.0	1.8	5.5		6.0	316 Stainless Steel
20238179	20.0	M8	16.0	1.8	4.4		5.0	304 Stainless Steel
20238896	20.0	M8	16.0	1.8	4.4		5.0	316 Stainless Steel
20238261	20.0	M10	20.0	1.8	5.5		6.0	304 Stainless Steel
20238988	20.0	M10	20.0	1.8	5.5		6.0	316 Stainless Steel

Vented Countersunk Machine Screws

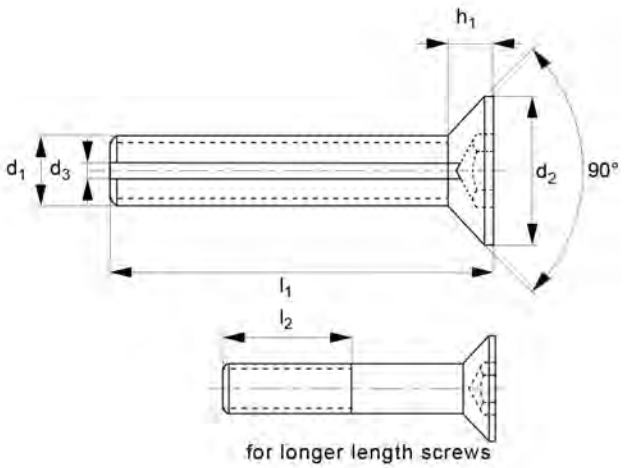

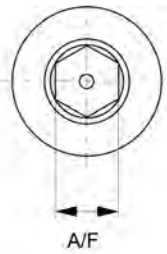



Part Number	l1	d1	d2	D3	H1	l2	A/F	Material
20238353	20.0	M12	24.0	1.8	6.5		8.0	304 Stainless Steel
20239077	20.0	M12	24.0	1.8	6.5		8.0	316 Stainless Steel
20238278	25.0	M10	20.0	1.8	5.5		6.0	304 Stainless Steel
20238995	25.0	M10	20.0	1.8	5.5		6.0	316 Stainless Steel
20238360	25.0	M12	24.0	1.8	6.5		8.0	304 Stainless Steel
20239084	25.0	M12	24.0	1.8	6.5		8.0	316 Stainless Steel
20238438	25.0	M16	30.0	1.8	7.5		10.0	304 Stainless Steel
20239152	25.0	M16	30.0	1.8	7.5		10.0	316 Stainless Steel
20238377	30.0	M12	24.0	1.8	6.5		8.0	304 Stainless Steel
20239091	30.0	M12	24.0	1.8	6.5		8.0	316 Stainless Steel
20238445	30.0	M16	30.0	1.8	7.5		10.0	304 Stainless Steel
20239169	30.0	M16	30.0	1.8	7.5		10.0	316 Stainless Steel
20238452	35.0	M16	30.0	1.8	7.5		10.0	304 Stainless Steel
20239176	35.0	M16	30.0	1.8	7.5		10.0	316 Stainless Steel

Vented Screws - Socket Button Head

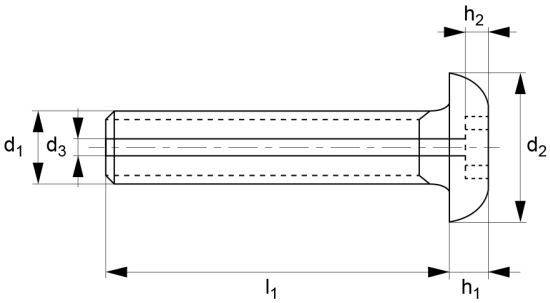

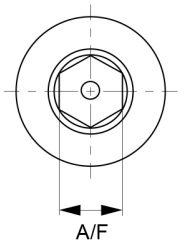



Features

- Their centre vent feature reduces virtual leakage from high vacuum systems.
- Hexagonal drives are suitable for precision assembling and when there is limited surface area.
- Suited for sealed enclosures, housings, and machinery.

Specifications

Material: 316 Stainless Steel, 304 Stainless Steel

Vented screws are fasteners with a hole drilled through the middle that allow gases trapped at the bottom of a blind threaded hole to escape through the core and provide airflow within an application. The screws are a common option for HV and UHV systems because their centre vent feature reduces virtual leakage from high vacuum systems.

This range of Vented Screws features a socket button head with a hexagonal drive. Hexagonal drives are suitable for precision assembling and when there is limited surface area. They are made from Stainless Steel.

Vented Screws - Socket Button Head

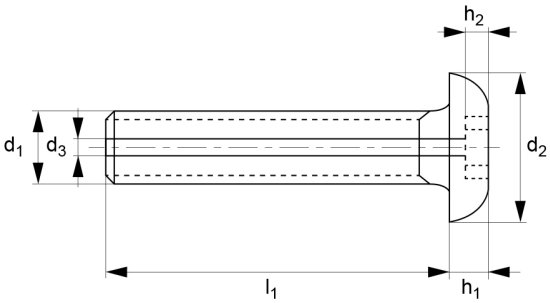

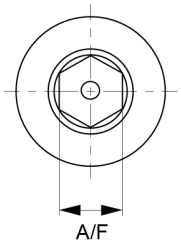



Part Number	l1	d1	d2	D3	H1	h2	A/F	Material
20227395	5.0	M3	5.7	1.0	1.7	1.0	2.0	304 Stainless Steel
20239619	5.0	M3	5.7	1.0	1.7	1.0	2.0	316 Stainless Steel
20239220	5.0	M4	7.6	1.0	2.2	1.3	3.0	304 Stainless Steel
20239671	5.0	M4	7.6	1.0	2.2	1.3	3.0	316 Stainless Steel
20227401	6.0	M3	5.7	1.0	1.7	1.0	2.0	304 Stainless Steel
20239626	6.0	M3	5.7	1.0	1.7	1.0	2.0	316 Stainless Steel
20227432	6.0	M4	7.6	1.0	2.2	1.3	3.0	304 Stainless Steel
20239688	6.0	M4	7.6	1.0	2.2	1.3	3.0	316 Stainless Steel
20227487	6.0	M5	9.5	1.3	2.8	1.6	3.0	304 Stainless Steel
20239770	6.0	M5	9.5	1.3	2.8	1.6	3.0	316 Stainless Steel
20222451	8.0	M3	5.7	1.0	1.7	1.0	2.0	304 Stainless Steel
20239633	8.0	M3	5.7	1.0	1.7	1.0	2.0	316 Stainless Steel
20227449	8.0	M4	7.6	1.0	2.2	1.3	3.0	304 Stainless Steel
20239695	8.0	M4	7.6	1.0	2.2	1.3	3.0	316 Stainless Steel
20227494	8.0	M5	9.5	1.3	2.8	1.6	3.0	304 Stainless Steel
20239787	8.0	M5	9.5	1.3	2.8	1.6	3.0	316 Stainless Steel
20227555	8.0	M6	10.5	1.6	3.3	2.1	4.0	304 Stainless Steel
20239879	8.0	M6	10.5	1.6	3.3	2.1	4.0	316 Stainless Steel
20227418	10.0	M3	5.7	1.0	1.7	1.0	2.0	304 Stainless Steel
20239640	10.0	M3	5.7	1.0	1.7	1.0	2.0	316 Stainless Steel
20227456	10.0	M4	7.6	1.0	2.2	1.3	3.0	304 Stainless Steel
20239701	10.0	M4	7.6	1.0	2.2	1.3	3.0	316 Stainless Steel
20227500	10.0	M5	9.5	1.3	2.8	1.6	3.0	304 Stainless Steel

Vented Screws - Socket Button Head

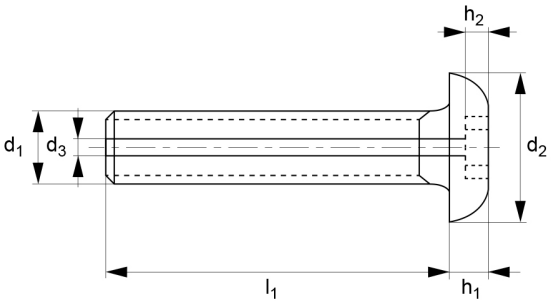

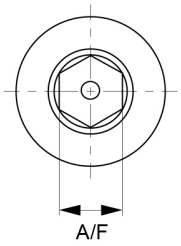



Part Number	l1	d1	d2	D3	H1	h2	A/F	Material
20239794	10.0	M5	9.5	1.3	2.8	1.6	3.0	316 Stainless Steel
20227562	10.0	M6	10.5	1.6	3.3	2.1	4.0	304 Stainless Steel
20239886	10.0	M6	10.5	1.6	3.3	2.1	4.0	316 Stainless Steel
20227425	12.0	M3	5.7	1.0	1.7	1.0	2.0	304 Stainless Steel
20239657	12.0	M3	5.7	1.0	1.7	1.0	2.0	316 Stainless Steel
20227463	12.0	M4	7.6	1.0	2.2	1.3	3.0	304 Stainless Steel
20239718	12.0	M4	7.6	1.0	2.2	1.3	3.0	316 Stainless Steel
20227517	12.0	M5	9.5	1.3	2.8	1.6	3.0	304 Stainless Steel
20239800	12.0	M5	9.5	1.3	2.8	1.6	3.0	316 Stainless Steel
20227579	12.0	M6	10.5	1.6	3.3	2.1	4.0	304 Stainless Steel
20239893	12.0	M6	10.5	1.6	3.3	2.1	4.0	316 Stainless Steel
20239350	12.0	M8	14.0	1.8	4.4	2.6	5.0	304 Stainless Steel
20239985	12.0	M8	14.0	1.8	4.4	2.6	5.0	316 Stainless Steel
20230166	16.0	M3	5.7	1.0	1.7	1.0	2.0	304 Stainless Steel
20239664	16.0	M3	5.7	1.0	1.7	1.0	2.0	316 Stainless Steel
20227470	16.0	M4	7.6	1.0	2.2	1.3	3.0	304 Stainless Steel
20239725	16.0	M4	7.6	1.0	2.2	1.3	3.0	316 Stainless Steel
20227524	16.0	M5	9.5	1.3	2.8	1.6	3.0	304 Stainless Steel
20239817	16.0	M5	9.5	1.3	2.8	1.6	3.0	316 Stainless Steel
20227586	16.0	M6	10.5	1.6	3.3	2.1	4.0	304 Stainless Steel
20239909	16.0	M6	10.5	1.6	3.3	2.1	4.0	316 Stainless Steel
20229016	16.0	M8	14.0	1.8	4.4	2.6	5.0	304 Stainless Steel
20239992	16.0	M8	14.0	1.8	4.4	2.6	5.0	316 Stainless Steel

Vented Screws - Socket Button Head

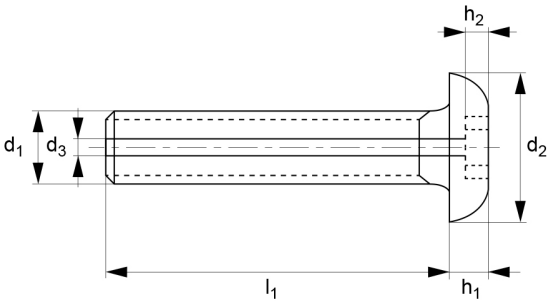

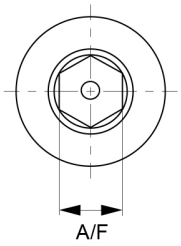



Part Number	l1	d1	d2	D3	H1	h2	A/F	Material
20239442	16.0	M10	17.5	1.8	5.5	3.1	6.0	304 Stainless Steel
20240080	16.0	M10	17.5	1.8	5.5	3.1	6.0	316 Stainless Steel
20239237	20.0	M4	7.6	1.0	2.2	1.3	3.0	304 Stainless Steel
20239732	20.0	M4	7.6	1.0	2.2	1.3	3.0	316 Stainless Steel
20227531	20.0	M5	9.5	1.3	2.8	1.6	3.0	304 Stainless Steel
20239824	20.0	M5	9.5	1.3	2.8	1.6	3.0	316 Stainless Steel
20227593	20.0	M6	10.5	1.6	3.3	2.1	4.0	304 Stainless Steel
20239916	20.0	M6	10.5	1.6	3.3	2.1	4.0	316 Stainless Steel
20239367	20.0	M8	14.0	1.8	4.4	2.6	5.0	304 Stainless Steel
20240004	20.0	M8	14.0	1.8	4.4	2.6	5.0	316 Stainless Steel
20239459	20.0	M10	17.5	1.8	5.5	3.1	6.0	304 Stainless Steel
20240097	20.0	M10	17.5	1.8	5.5	3.1	6.0	316 Stainless Steel
20239534	20.0	M12	21.0	1.8	6.6	4.2	8.0	304 Stainless Steel
20240172	20.0	M12	21.0	1.8	6.6	4.2	8.0	316 Stainless Steel
20239244	25.0	M4	7.6	1.0	2.2	1.3	3.0	304 Stainless Steel
20239749	25.0	M4	7.6	1.0	2.2	1.3	3.0	316 Stainless Steel
20227548	25.0	M5	9.5	1.3	2.8	1.6	3.0	304 Stainless Steel
20239831	25.0	M5	9.5	1.3	2.8	1.6	3.0	316 Stainless Steel
20227609	25.0	M6	10.5	1.6	3.3	2.1	4.0	304 Stainless Steel
20239923	25.0	M6	10.5	1.6	3.3	2.1	4.0	316 Stainless Steel
20239374	25.0	M8	14.0	1.8	4.4	2.6	5.0	304 Stainless Steel
20240011	25.0	M8	14.0	1.8	4.4	2.6	5.0	316 Stainless Steel
20239466	25.0	M10	17.5	1.8	5.5	3.1	6.0	304 Stainless Steel

Vented Screws - Socket Button Head

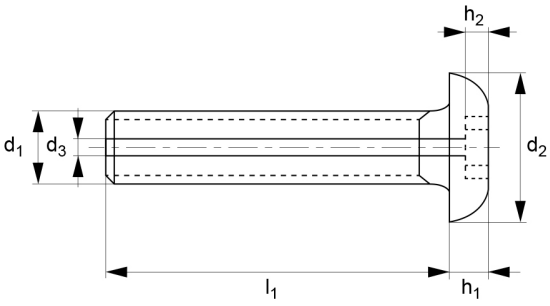

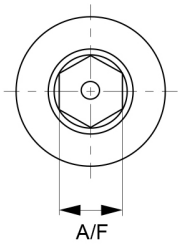



Part Number	l1	d1	d2	D3	H1	h2	A/F	Material
20240103	25.0	M10	17.5	1.8	5.5	3.1	6.0	316 Stainless Steel
20239541	25.0	M12	21.0	1.8	6.6	4.2	8.0	304 Stainless Steel
20240189	25.0	M12	21.0	1.8	6.6	4.2	8.0	316 Stainless Steel
20239251	30.0	M4	7.6	1.0	2.2	1.3	3.0	304 Stainless Steel
20239756	30.0	M4	7.6	1.0	2.2	1.3	3.0	316 Stainless Steel
20239275	30.0	M5	9.5	1.3	2.8	1.6	3.0	304 Stainless Steel
20239848	30.0	M5	9.5	1.3	2.8	1.6	3.0	316 Stainless Steel
20239305	30.0	M6	10.5	1.6	3.3	2.1	4.0	304 Stainless Steel
20239930	30.0	M6	10.5	1.6	3.3	2.1	4.0	316 Stainless Steel
20239381	30.0	M8	14.0	1.8	4.4	2.6	5.0	304 Stainless Steel
20240028	30.0	M8	14.0	1.8	4.4	2.6	5.0	316 Stainless Steel
20239473	30.0	M10	17.5	1.8	5.5	3.1	6.0	304 Stainless Steel
20240110	30.0	M10	17.5	1.8	5.5	3.1	6.0	316 Stainless Steel
20239558	30.0	M12	21.0	1.8	6.6	4.2	8.0	304 Stainless Steel
20240196	30.0	M12	21.0	1.8	6.6	4.2	8.0	316 Stainless Steel
20239268	35.0	M4	7.6	1.0	2.2	1.3	3.0	304 Stainless Steel
20239763	35.0	M4	7.6	1.0	2.2	1.3	3.0	316 Stainless Steel
20239282	35.0	M5	9.5	1.3	2.8	1.6	3.0	304 Stainless Steel
20239855	35.0	M5	9.5	1.3	2.8	1.6	3.0	316 Stainless Steel
20239312	35.0	M6	10.5	1.6	3.3	2.1	4.0	304 Stainless Steel
20239947	35.0	M6	10.5	1.6	3.3	2.1	4.0	316 Stainless Steel
20239398	35.0	M8	14.0	1.8	4.4	2.6	5.0	304 Stainless Steel
20240035	35.0	M8	14.0	1.8	4.4	2.6	5.0	316 Stainless Steel

Vented Screws - Socket Button Head

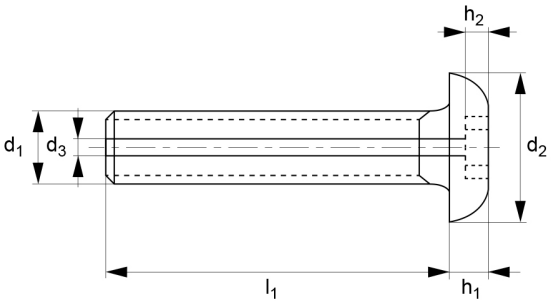

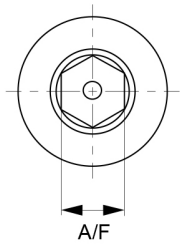



Part Number	l1	d1	d2	D3	H1	h2	A/F	Material
20239480	35.0	M10	17.5	1.8	5.5	3.1	6.0	304 Stainless Steel
20240127	35.0	M10	17.5	1.8	5.5	3.1	6.0	316 Stainless Steel
20239565	35.0	M12	21.0	1.8	6.6	4.2	8.0	304 Stainless Steel
20240202	35.0	M12	21.0	1.8	6.6	4.2	8.0	316 Stainless Steel
20239299	40.0	M5	9.5	1.3	2.8	1.6	3.0	304 Stainless Steel
20239862	40.0	M5	9.5	1.3	2.8	1.6	3.0	316 Stainless Steel
20239329	40.0	M6	10.5	1.6	3.3	2.1	4.0	304 Stainless Steel
20239954	40.0	M6	10.5	1.6	3.3	2.1	4.0	316 Stainless Steel
20239404	40.0	M8	14.0	1.8	4.4	2.6	5.0	304 Stainless Steel
20240042	40.0	M8	14.0	1.8	4.4	2.6	5.0	316 Stainless Steel
20239497	40.0	M10	17.5	1.8	5.5	3.1	6.0	304 Stainless Steel
20240134	40.0	M10	17.5	1.8	5.5	3.1	6.0	316 Stainless Steel
20239572	40.0	M12	21.0	1.8	6.6	4.2	8.0	304 Stainless Steel
20240219	40.0	M12	21.0	1.8	6.6	4.2	8.0	316 Stainless Steel
20239336	45.0	M6	10.5	1.6	3.3	2.1	4.0	304 Stainless Steel
20239961	45.0	M6	10.5	1.6	3.3	2.1	4.0	316 Stainless Steel
20239411	45.0	M8	14.0	1.8	4.4	2.6	5.0	304 Stainless Steel
20240059	45.0	M8	14.0	1.8	4.4	2.6	5.0	316 Stainless Steel
20239503	45.0	M10	17.5	1.8	5.5	3.1	6.0	304 Stainless Steel
20240141	45.0	M10	17.5	1.8	5.5	3.1	6.0	316 Stainless Steel
20239589	45.0	M12	21.0	1.8	6.6	4.2	8.0	304 Stainless Steel
20240226	45.0	M12	21.0	1.8	6.6	4.2	8.0	316 Stainless Steel
20239343	50.0	M6	10.5	1.6	3.3	2.1	4.0	304 Stainless Steel

Vented Screws - Socket Button Head

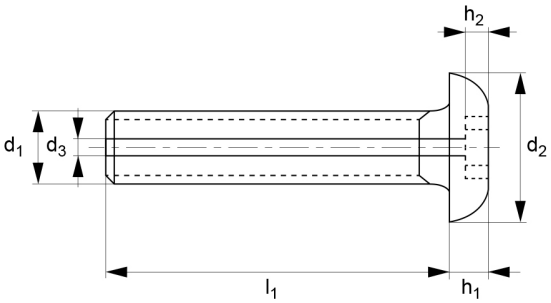

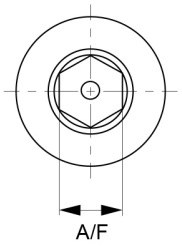



Part Number	l1	d1	d2	D3	H1	h2	A/F	Material
20239978	50.0	M6	10.5	1.6	3.3	2.1	4.0	316 Stainless Steel
20239428	50.0	M8	14.0	1.8	4.4	2.6	5.0	304 Stainless Steel
20240066	50.0	M8	14.0	1.8	4.4	2.6	5.0	316 Stainless Steel
20239510	50.0	M10	17.5	1.8	5.5	3.1	6.0	304 Stainless Steel
20240158	50.0	M10	17.5	1.8	5.5	3.1	6.0	316 Stainless Steel
20239596	50.0	M12	21.0	1.8	6.6	4.2	8.0	304 Stainless Steel
20240233	50.0	M12	21.0	1.8	6.6	4.2	8.0	316 Stainless Steel
20239435	60.0	M8	14.0	1.8	4.4	2.6	5.0	304 Stainless Steel
20240073	60.0	M8	14.0	1.8	4.4	2.6	5.0	316 Stainless Steel
20239527	60.0	M10	17.5	1.8	5.5	3.1	6.0	304 Stainless Steel
20240165	60.0	M10	17.5	1.8	5.5	3.1	6.0	316 Stainless Steel
20239602	60.0	M12	21.0	1.8	6.6	4.2	8.0	304 Stainless Steel
20240240	60.0	M12	21.0	1.8	6.6	4.2	8.0	316 Stainless Steel

Vented Screws - Cap Head

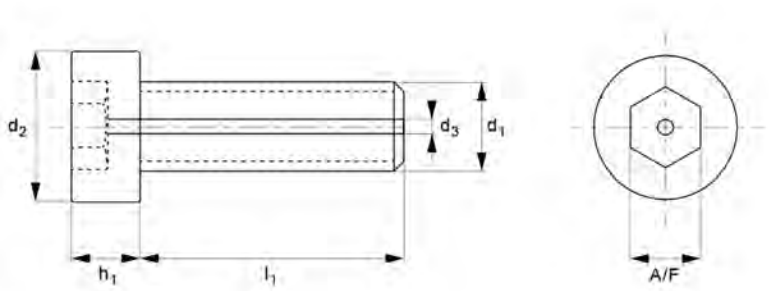



Features

- Hollow core provides an integrated vent system.
- Made from ultrasonically cleaned austenitic Stainless Steel that provides good resistance to corrosion.
- Complies to DIN 912.

Specifications

Material: 316 Stainless Steel, 304 Stainless Steel

This range of Vented Screws features a cap head with a hexagonal drive. Hexagonal drives are ideal for precision assembly and are ideally used where less surface area is available.

The screws hollow core acts like a venting system. The range complies to DIN 912 (with central vent). They are made from ultrasonically cleaned austenitic Stainless Steel that provides very good resistance to corrosion, good strength and machinability.

The material is a popular choice for construction and automotive applications.

Vented Screws - Cap Head

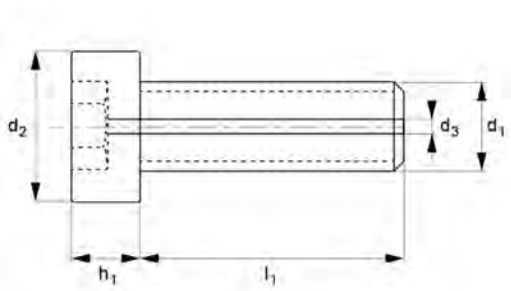

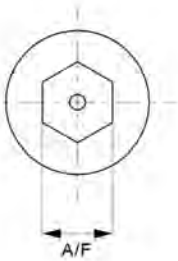



Part Number	d_1	d_2	d_3	l_1	h_1	A/F	Material
20144395	M2	3.8	0.7	5.0	2.0	1.5	304 Stainless Steel
20144401	M2	3.8	0.7	10.0	2.0	1.5	304 Stainless Steel
20144418	M2	3.8	0.7	12.0	2.0	1.5	304 Stainless Steel
20144425	M2	3.8	0.7	16.0	2.0	1.5	304 Stainless Steel
20244378	M2	3.8	0.7	4.0	2.0	1.5	316 Stainless Steel
20244385	M2	3.8	0.7	5.0	2.0	1.5	316 Stainless Steel
20219857	M2	3.8	0.7	6.0	2.0	1.5	316 Stainless Steel
20244392	M2	3.8	0.7	8.0	2.0	1.5	316 Stainless Steel
20244408	M2	3.8	0.7	10.0	2.0	1.5	316 Stainless Steel
20244415	M2	3.8	0.7	12.0	2.0	1.5	316 Stainless Steel
20244422	M2	3.8	0.7	16.0	2.0	1.5	316 Stainless Steel
20142940	M2.5	4.5	0.9	5.0	2.5	2.0	304 Stainless Steel
20142957	M2.5	4.5	0.9	8.0	2.5	2.0	304 Stainless Steel
20143312	M2.5	3.8	0.7	4.0	2.0	1.5	304 Stainless Steel
20143329	M2.5	3.8	0.7	6.0	2.0	1.5	304 Stainless Steel
20143336	M2.5	3.8	0.7	8.0	2.0	1.5	304 Stainless Steel
20144432	M2.5	4.5	0.9	4.0	2.5	2.0	304 Stainless Steel
20144449	M2.5	4.5	0.9	6.0	2.5	2.0	304 Stainless Steel
20144456	M2.5	4.5	0.9	10.0	2.5	2.0	304 Stainless Steel
20144463	M2.5	4.5	0.9	12.0	2.5	2.0	304 Stainless Steel
20144470	M2.5	4.5	0.9	16.0	2.5	2.0	304 Stainless Steel
20144487	M2.5	4.5	0.9	20.0	2.5	2.0	304 Stainless Steel
20244439	M2.5	4.5	0.9	4.0	2.5	2.0	316 Stainless Steel
20244446	M2.5	4.5	0.9	5.0	2.5	2.0	316 Stainless Steel

Vented Screws - Cap Head

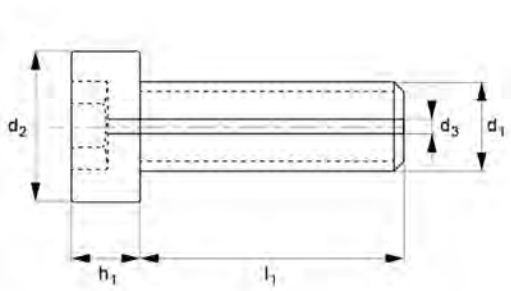

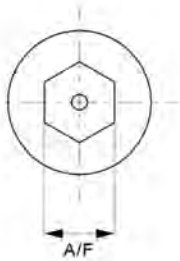



Part Number	d_1	d_2	d_3	l_1	h_1	A/F	Material
20244453	M2.5	4.5	0.9	6.0	2.5	2.0	316 Stainless Steel
20244460	M2.5	4.5	0.9	8.0	2.5	2.0	316 Stainless Steel
20219864	M2.5	4.5	0.9	10.0	2.5	2.0	316 Stainless Steel
20244477	M2.5	4.5	0.9	12.0	2.5	2.0	316 Stainless Steel
20219871	M2.5	4.5	0.9	16.0	2.5	2.0	316 Stainless Steel
20244484	M2.5	4.5	0.9	20.0	2.5	2.0	316 Stainless Steel
20142926	M3	5.5	1.0	8.0	3.0	3.0	304 Stainless Steel
20142933	M3	5.5	1.0	10.0	3.0	3.0	304 Stainless Steel
20143091	M3	5.5	1.0	6.0	3.0	3.0	304 Stainless Steel
20143107	M3	5.5	1.0	16.0	3.0	3.0	304 Stainless Steel
20143350	M3	5.5	1.0	5.0	3.0	3.0	304 Stainless Steel
20143367	M3	5.5	1.0	12.0	3.0	3.0	304 Stainless Steel
20235987	M3	5.5	1.0	5.0	3.0	3.0	316 Stainless Steel
20226657	M3	5.5	1.0	6.0	3.0	3.0	316 Stainless Steel
20235994	M3	5.5	1.0	8.0	3.0	3.0	316 Stainless Steel
20236007	M3	5.5	1.0	10.0	3.0	3.0	316 Stainless Steel
20236014	M3	5.5	1.0	12.0	3.0	3.0	316 Stainless Steel
20236021	M3	5.5	1.0	16.0	3.0	3.0	316 Stainless Steel
20142964	M4	7.0	1.0	12.0	4.0	3.0	304 Stainless Steel
20143121	M4	7.0	1.0	10.0	4.0	3.0	304 Stainless Steel
20143138	M4	7.0	1.0	8.0	4.0	3.0	304 Stainless Steel
20143145	M4	7.0	1.0	20.0	4.0	3.0	304 Stainless Steel
20143299	M4	7.0	1.0	35.0	4.0	3.0	304 Stainless Steel
20143374	M4	7.0	1.0	5.0	4.0	3.0	304 Stainless Steel

Vented Screws - Cap Head

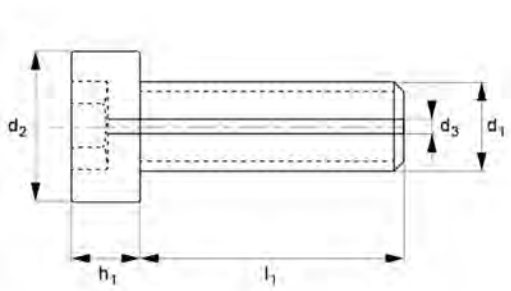

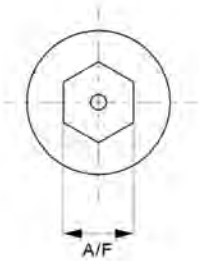



Part Number	d_1	d_2	d_3	l_1	h_1	A/F	Material
20143381	M4	7.0	1.0	6.0	4.0	3.0	304 Stainless Steel
20143398	M4	7.0	1.0	16.0	4.0	3.0	304 Stainless Steel
20143404	M4	7.0	1.0	25.0	4.0	3.0	304 Stainless Steel
20143411	M4	7.0	1.0	30.0	4.0	3.0	304 Stainless Steel
20236038	M4	7.0	1.0	5.0	4.0	3.0	316 Stainless Steel
20236045	M4	7.0	1.0	6.0	4.0	3.0	316 Stainless Steel
20236052	M4	7.0	1.0	8.0	4.0	3.0	316 Stainless Steel
20226879	M4	7.0	1.0	10.0	4.0	3.0	316 Stainless Steel
20236069	M4	7.0	1.0	12.0	4.0	3.0	316 Stainless Steel
20226886	M4	7.0	1.0	16.0	4.0	3.0	316 Stainless Steel
20236076	M4	7.0	1.0	20.0	4.0	3.0	316 Stainless Steel
20236083	M4	7.0	1.0	25.0	4.0	3.0	316 Stainless Steel
20236090	M4	7.0	1.0	30.0	4.0	3.0	316 Stainless Steel
20236106	M4	7.0	1.0	35.0	4.0	3.0	316 Stainless Steel
20143008	M5	8.5	1.3	12.0	5.0	4.0	304 Stainless Steel
20143015	M5	8.5	1.3	16.0	5.0	4.0	304 Stainless Steel
20143022	M5	8.5	1.3	20.0	5.0	4.0	304 Stainless Steel
20143206	M5	8.5	1.3	8.0	5.0	4.0	304 Stainless Steel
20143343	M5	8.5	1.3	10.0	5.0	4.0	304 Stainless Steel
20143428	M5	8.5	1.3	6.0	5.0	4.0	304 Stainless Steel
20143435	M5	8.5	1.3	25.0	5.0	4.0	304 Stainless Steel
20143442	M5	8.5	1.3	30.0	5.0	4.0	304 Stainless Steel
20143459	M5	8.5	1.3	35.0	5.0	4.0	304 Stainless Steel
20143466	M5	8.5	1.3	40.0	5.0	4.0	304 Stainless Steel

Vented Screws - Cap Head

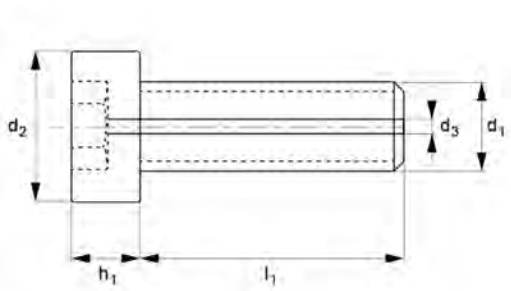

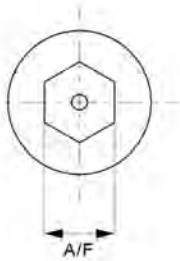



Part Number	d_1	d_2	d_3	l_1	h_1	A/F	Material
20236113	M5	8.5	1.3	6.0	5.0	4.0	316 Stainless Steel
20236120	M5	8.5	1.3	8.0	5.0	4.0	316 Stainless Steel
20226909	M5	8.5	1.3	10.0	5.0	4.0	316 Stainless Steel
20226893	M5	8.5	1.3	12.0	5.0	4.0	316 Stainless Steel
20236137	M5	8.5	1.3	16.0	5.0	4.0	316 Stainless Steel
20229979	M5	8.5	1.3	20.0	5.0	4.0	316 Stainless Steel
20236144	M5	8.5	1.3	25.0	5.0	4.0	316 Stainless Steel
20236151	M5	8.5	1.3	30.0	5.0	4.0	316 Stainless Steel
20236168	M5	8.5	1.3	35.0	5.0	4.0	316 Stainless Steel
20236175	M5	8.5	1.3	40.0	5.0	4.0	316 Stainless Steel
20142988	M6	10.0	1.6	20.0	6.0	5.0	304 Stainless Steel
20142995	M6	10.0	1.6	40.0	6.0	5.0	304 Stainless Steel
20143039	M6	10.0	1.6	12.0	6.0	5.0	304 Stainless Steel
20143053	M6	10.0	1.6	25.0	6.0	5.0	304 Stainless Steel
20143060	M6	10.0	1.6	30.0	6.0	5.0	304 Stainless Steel
20143169	M6	10.0	1.6	35.0	6.0	5.0	304 Stainless Steel
20143473	M6	10.0	1.6	8.0	6.0	5.0	304 Stainless Steel
20143480	M6	10.0	1.6	10.0	6.0	5.0	304 Stainless Steel
20143497	M6	10.0	1.6	16.0	6.0	5.0	304 Stainless Steel
20143503	M6	10.0	1.6	45.0	6.0	5.0	304 Stainless Steel
20143510	M6	10.0	1.6	50.0	6.0	5.0	304 Stainless Steel
20236182	M6	10.0	1.6	8.0	6.0	5.0	316 Stainless Steel
20236199	M6	10.0	1.6	10.0	6.0	5.0	316 Stainless Steel
20236205	M6	10.0	1.6	12.0	6.0	5.0	316 Stainless Steel

Vented Screws - Cap Head

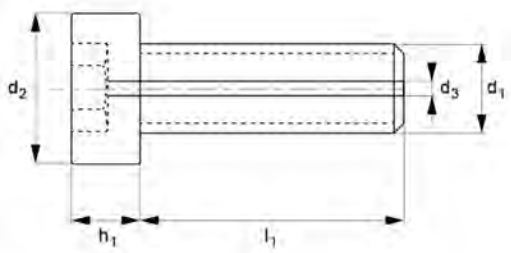

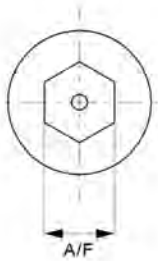



Part Number	d_1	d_2	d_3	l_1	h_1	A/F	Material
20226954	M6	10.0	1.6	16.0	6.0	5.0	316 Stainless Steel
20236212	M6	10.0	1.6	20.0	6.0	5.0	316 Stainless Steel
20236229	M6	10.0	1.6	25.0	6.0	5.0	316 Stainless Steel
20236236	M6	10.0	1.6	30.0	6.0	5.0	316 Stainless Steel
20236243	M6	10.0	1.6	35.0	6.0	5.0	316 Stainless Steel
20236250	M6	10.0	1.6	40.0	6.0	5.0	316 Stainless Steel
20236267	M6	10.0	1.6	45.0	6.0	5.0	316 Stainless Steel
20236274	M6	10.0	1.6	50.0	6.0	5.0	316 Stainless Steel
20143046	M8	13.0	1.8	25.0	8.0	6.0	304 Stainless Steel
20143077	M8	13.0	1.8	30.0	8.0	6.0	304 Stainless Steel
20143305	M8	13.0	1.8	35.0	8.0	6.0	304 Stainless Steel
20143527	M8	13.0	1.8	12.0	8.0	6.0	304 Stainless Steel
20143534	M8	13.0	1.8	16.0	8.0	6.0	304 Stainless Steel
20143541	M8	13.0	1.8	20.0	8.0	6.0	304 Stainless Steel
20143558	M8	13.0	1.8	40.0	8.0	6.0	304 Stainless Steel
20143565	M8	13.0	1.8	45.0	8.0	6.0	304 Stainless Steel
20143572	M8	13.0	1.8	50.0	8.0	6.0	304 Stainless Steel
20143589	M8	13.0	1.8	60.0	8.0	6.0	304 Stainless Steel
20236281	M8	13.0	1.8	12.0	8.0	6.0	316 Stainless Steel
20236298	M8	13.0	1.8	16.0	8.0	6.0	316 Stainless Steel
20236304	M8	13.0	1.8	20.0	8.0	6.0	316 Stainless Steel
20236311	M8	13.0	1.8	25.0	8.0	6.0	316 Stainless Steel
20236328	M8	13.0	1.8	30.0	8.0	6.0	316 Stainless Steel
20236335	M8	13.0	1.8	35.0	8.0	6.0	316 Stainless Steel

Vented Screws - Cap Head

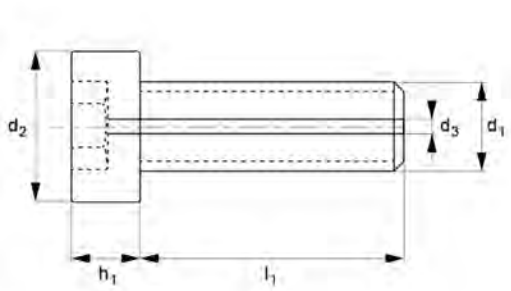

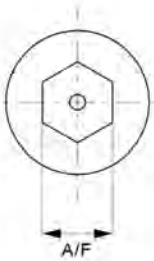



Part Number	d_1	d_2	d_3	l_1	h_1	A/F	Material
20236342	M8	13.0	1.8	40.0	8.0	6.0	316 Stainless Steel
20236359	M8	13.0	1.8	45.0	8.0	6.0	316 Stainless Steel
20236366	M8	13.0	1.8	50.0	8.0	6.0	316 Stainless Steel
20236373	M8	13.0	1.8	60.0	8.0	6.0	316 Stainless Steel
20143084	M10	16.0	1.8	35.0	10.0	8.0	304 Stainless Steel
20143596	M10	16.0	1.8	16.0	10.0	8.0	304 Stainless Steel
20143602	M10	16.0	1.8	20.0	10.0	8.0	304 Stainless Steel
20143619	M10	16.0	1.8	25.0	10.0	8.0	304 Stainless Steel
20143626	M10	16.0	1.8	30.0	10.0	8.0	304 Stainless Steel
20143633	M10	16.0	1.8	40.0	10.0	8.0	304 Stainless Steel
20143640	M10	16.0	1.8	45.0	10.0	8.0	304 Stainless Steel
20143657	M10	16.0	1.8	50.0	10.0	8.0	304 Stainless Steel
20143664	M10	16.0	1.8	60.0	10.0	8.0	304 Stainless Steel
20236380	M10	16.0	1.8	16.0	10.0	8.0	316 Stainless Steel
20236397	M10	16.0	1.8	20.0	10.0	8.0	316 Stainless Steel
20236403	M10	16.0	1.8	25.0	10.0	8.0	316 Stainless Steel
20236410	M10	16.0	1.8	30.0	10.0	8.0	316 Stainless Steel
20236427	M10	16.0	1.8	35.0	10.0	8.0	316 Stainless Steel
20236434	M10	16.0	1.8	40.0	10.0	8.0	316 Stainless Steel
20236441	M10	16.0	1.8	45.0	10.0	8.0	316 Stainless Steel
20236458	M10	16.0	1.8	50.0	10.0	8.0	316 Stainless Steel
20236465	M10	16.0	1.8	60.0	10.0	8.0	316 Stainless Steel
20143671	M12	18.0	1.8	30.0	12.0	10.0	304 Stainless Steel
20143688	M12	18.0	1.8	35.0	12.0	10.0	304 Stainless Steel

Vented Screws - Cap Head

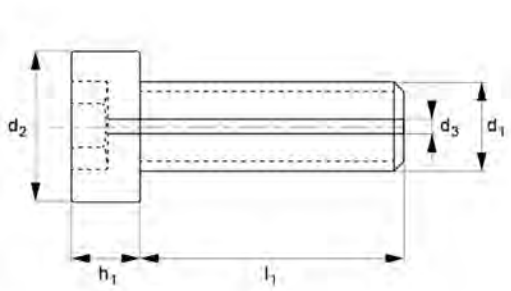

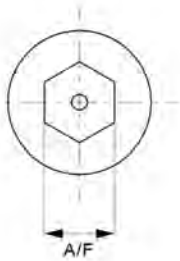



Part Number	d_1	d_2	d_3	l_1	h_1	A/F	Material
20143695	M12	18.0	1.8	40.0	12.0	10.0	304 Stainless Steel
20143701	M12	18.0	1.8	45.0	12.0	10.0	304 Stainless Steel
20143718	M12	18.0	1.8	50.0	12.0	10.0	304 Stainless Steel
20143725	M12	18.0	1.8	60.0	12.0	10.0	304 Stainless Steel
20145583	M12	18.0	1.8	20.0	12.0	10.0	304 Stainless Steel
20145590	M12	18.0	1.8	25.0	12.0	10.0	304 Stainless Steel
20236472	M12	18.0	1.8	20.0	12.0	10.0	316 Stainless Steel
20236489	M12	18.0	1.8	25.0	12.0	10.0	316 Stainless Steel
20236496	M12	18.0	1.8	30.0	12.0	10.0	316 Stainless Steel
20236502	M12	18.0	1.8	35.0	12.0	10.0	316 Stainless Steel
20236519	M12	18.0	1.8	40.0	12.0	10.0	316 Stainless Steel
20236526	M12	18.0	1.8	45.0	12.0	10.0	316 Stainless Steel
20236533	M12	18.0	1.8	50.0	12.0	10.0	316 Stainless Steel
20236540	M12	18.0	1.8	60.0	12.0	10.0	316 Stainless Steel
20143732	M16	24.0	1.8	25.0	16.0	14.0	304 Stainless Steel
20143749	M16	24.0	1.8	30.0	16.0	14.0	304 Stainless Steel
20143756	M16	24.0	1.8	35.0	16.0	14.0	304 Stainless Steel
20143763	M16	24.0	1.8	40.0	16.0	14.0	304 Stainless Steel
20143770	M16	24.0	1.8	45.0	16.0	14.0	304 Stainless Steel
20143787	M16	24.0	1.8	50.0	16.0	14.0	304 Stainless Steel
20143794	M16	24.0	1.8	60.0	16.0	14.0	304 Stainless Steel
20226930	M16	24.0	1.8	25.0	16.0	14.0	316 Stainless Steel
20236557	M16	24.0	1.8	30.0	16.0	14.0	316 Stainless Steel
20236564	M16	24.0	1.8	35.0	16.0	14.0	316 Stainless Steel

Vented Screws - Cap Head

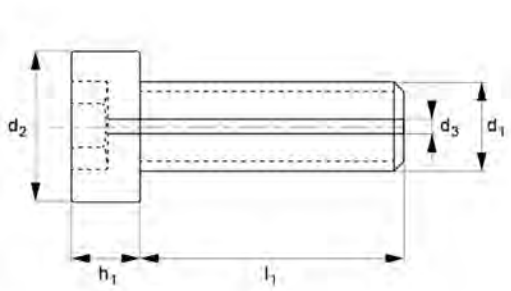

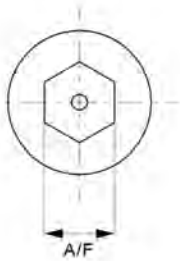



Part Number	d_1	d_2	d_3	l_1	h_1	A/F	Material
20236571	M16	24.0	1.8	40.0	16.0	14.0	316 Stainless Steel
20226947	M16	24.0	1.8	45.0	16.0	14.0	316 Stainless Steel
20236588	M16	24.0	1.8	50.0	16.0	14.0	316 Stainless Steel
20236595	M16	24.0	1.8	60.0	16.0	14.0	316 Stainless Steel

Vented Screws - Hex Head

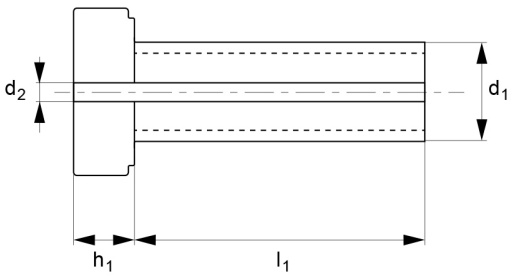

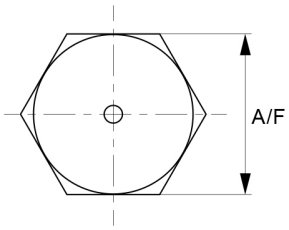



Features

- Allows gases trapped at the bottom of the threaded hole to escape through the core and provide airflow.
- Their centre vent feature reduces virtual leakage from high vacuum systems.

Specifications

Material: 316 Stainless Steel, 304 Stainless Steel

Vented screws are fasteners with a hole drilled through the middle that allow gases trapped at the bottom of a blind threaded hole to escape through the core and provide airflow within an application. The screws are a common option for HV and UHV systems because their centre vent feature reduces virtual leakage from high vacuum systems.

This range of Vented Screws features a hexagonal head. They are made from Stainless Steel.

Vented Screws - Hex Head

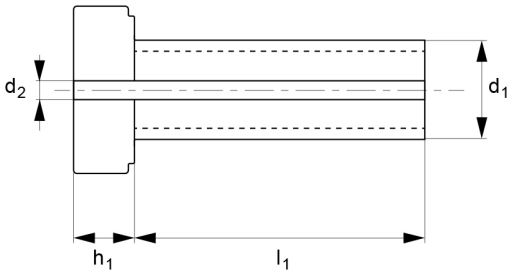

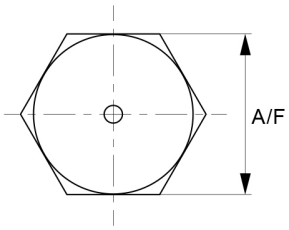



Part Number	l1	d1	d2	H1	A/F	Material
20228446	5.0	M3	1.0	2.0	6.0	304 Stainless Steel
20237073	5.0	M3	1.0	2.0	5.0	316 Stainless Steel
20236656	5.0	M4	1.0	2.8	7.0	304 Stainless Steel
20237134	5.0	M4	1.0	2.8	7.0	316 Stainless Steel
20236601	6.0	M3	1.0	2.0	6.0	304 Stainless Steel
20237080	6.0	M3	1.0	2.0	5.0	316 Stainless Steel
20228927	6.0	M4	1.0	2.8	7.0	304 Stainless Steel
20237141	6.0	M4	1.0	2.8	7.0	316 Stainless Steel
20236670	6.0	M5	1.3	3.5	8.0	304 Stainless Steel
20237233	6.0	M5	1.3	3.5	8.0	316 Stainless Steel
20236618	8.0	M3	1.0	2.0	6.0	304 Stainless Steel
20237097	8.0	M3	1.0	2.0	5.0	316 Stainless Steel
20236663	8.0	M4	1.0	2.8	7.0	304 Stainless Steel
20237158	8.0	M4	1.0	2.8	7.0	316 Stainless Steel
20236687	8.0	M5	1.3	3.5	8.0	304 Stainless Steel
20237240	8.0	M5	1.3	3.5	8.0	316 Stainless Steel
20236724	8.0	M6	1.6	4.0	10.0	304 Stainless Steel
20237332	8.0	M6	1.6	4.0	10.0	316 Stainless Steel
20236625	10.0	M3	1.0	2.0	6.0	304 Stainless Steel
20237103	10.0	M3	1.0	2.0	5.0	316 Stainless Steel
20227234	10.0	M4	1.0	2.8	7.0	304 Stainless Steel
20237165	10.0	M4	1.0	2.8	7.0	316 Stainless Steel
20227302	10.0	M5	1.3	3.5	8.0	304 Stainless Steel
20237257	10.0	M5	1.3	3.5	8.0	316 Stainless Steel

Vented Screws - Hex Head

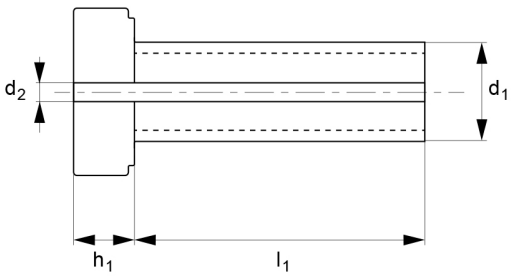

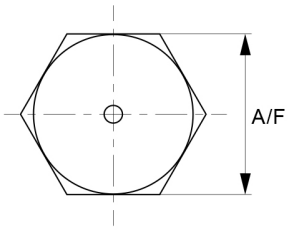



Part Number	l1	d1	d2	H1	A/F	Material
20236731	10.0	M6	1.6	4.0	10.0	304 Stainless Steel
20237349	10.0	M6	1.6	4.0	10.0	316 Stainless Steel
20236632	12.0	M3	1.0	2.0	6.0	304 Stainless Steel
20237110	12.0	M3	1.0	2.0	5.0	316 Stainless Steel
20227241	12.0	M4	1.0	2.8	7.0	304 Stainless Steel
20237172	12.0	M4	1.0	2.8	7.0	316 Stainless Steel
20227319	12.0	M5	1.3	3.5	8.0	304 Stainless Steel
20237264	12.0	M5	1.3	3.5	8.0	316 Stainless Steel
20236748	12.0	M6	1.6	4.0	10.0	304 Stainless Steel
20237356	12.0	M6	1.6	4.0	10.0	316 Stainless Steel
20236809	12.0	M8	1.8	5.3	13.0	304 Stainless Steel
20237448	12.0	M8	1.8	5.3	13.0	316 Stainless Steel
20236649	16.0	M3	1.0	2.0	6.0	304 Stainless Steel
20237127	16.0	M3	1.0	2.0	5.0	316 Stainless Steel
20227258	16.0	M4	1.0	2.8	7.0	304 Stainless Steel
20237189	16.0	M4	1.0	2.8	7.0	316 Stainless Steel
20227203	16.0	M5	1.3	3.5	8.0	304 Stainless Steel
20237271	16.0	M5	1.3	3.5	8.0	316 Stainless Steel
20226961	16.0	M6	1.6	4.0	10.0	304 Stainless Steel
20237363	16.0	M6	1.6	4.0	10.0	316 Stainless Steel
20227005	16.0	M8	1.8	5.3	13.0	304 Stainless Steel
20237455	16.0	M8	1.8	5.3	13.0	316 Stainless Steel
20236861	16.0	M10	1.8	6.4	17.0	304 Stainless Steel
20237530	16.0	M10	1.8	6.4	17.0	316 Stainless Steel

Vented Screws - Hex Head

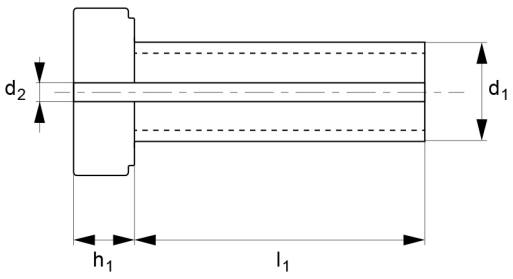

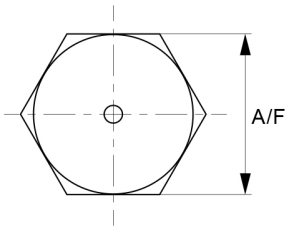



Part Number	l1	d1	d2	H1	A/F	Material
20227265	20.0	M4	1.0	2.8	7.0	304 Stainless Steel
20237196	20.0	M4	1.0	2.8	7.0	316 Stainless Steel
20227326	20.0	M5	1.3	3.5	8.0	304 Stainless Steel
20237288	20.0	M5	1.3	3.5	8.0	316 Stainless Steel
20227340	20.0	M6	1.6	4.0	10.0	304 Stainless Steel
20237370	20.0	M6	1.6	4.0	10.0	316 Stainless Steel
20227364	20.0	M8	1.8	5.3	13.0	304 Stainless Steel
20237462	20.0	M8	1.8	5.3	13.0	316 Stainless Steel
20230029	20.0	M10	1.8	6.4	17.0	304 Stainless Steel
20237547	20.0	M10	1.8	6.4	17.0	316 Stainless Steel
20236946	20.0	M12	1.8	7.5	19.0	304 Stainless Steel
20237639	20.0	M12	1.8	7.5	19.0	316 Stainless Steel
20227272	25.0	M4	1.0	2.8	7.0	304 Stainless Steel
20237202	25.0	M4	1.0	2.8	7.0	316 Stainless Steel
20227333	25.0	M5	1.3	3.5	8.0	304 Stainless Steel
20237295	25.0	M5	1.3	3.5	8.0	316 Stainless Steel
20227357	25.0	M6	1.6	4.0	10.0	304 Stainless Steel
20237387	25.0	M6	1.6	4.0	10.0	316 Stainless Steel
20227371	25.0	M8	1.8	5.3	13.0	304 Stainless Steel
20226855	25.0	M8	1.8	5.3	13.0	316 Stainless Steel
20236878	25.0	M10	1.8	6.4	17.0	304 Stainless Steel
20237554	25.0	M10	1.8	6.4	17.0	316 Stainless Steel
20228217	25.0	M12	1.8	7.5	19.0	304 Stainless Steel
20237646	25.0	M12	1.8	7.5	19.0	316 Stainless Steel

Vented Screws - Hex Head

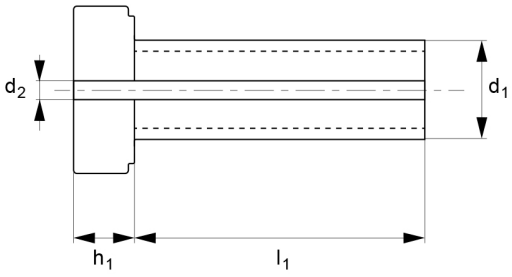

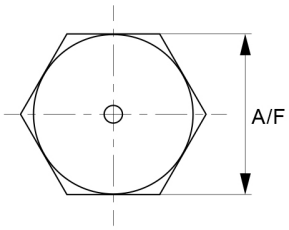



Part Number	l1	d1	d2	H1	A/F	Material
20237004	25.0	M16	1.8	10.0	24	304 Stainless Steel
20237714	25.0	M16	1.8	10.0	24	316 Stainless Steel
20227289	30.0	M4	1.0	2.8	7.0	304 Stainless Steel
20237219	30.0	M4	1.0	2.8	7.0	316 Stainless Steel
20236694	30.0	M5	1.3	3.5	8.0	304 Stainless Steel
20237301	30.0	M5	1.3	3.5	8.0	316 Stainless Steel
20236755	30.0	M6	1.6	4.0	10.0	304 Stainless Steel
20237394	30.0	M6	1.6	4.0	10.0	316 Stainless Steel
20227388	30.0	M8	1.8	5.3	13.0	304 Stainless Steel
20237479	30.0	M8	1.8	5.3	13.0	316 Stainless Steel
20236885	30.0	M10	1.8	6.4	17.0	304 Stainless Steel
20237561	30.0	M10	1.8	6.4	17.0	316 Stainless Steel
20229030	30.0	M12	1.8	7.5	19.0	304 Stainless Steel
20237653	30.0	M12	1.8	7.5	19.0	316 Stainless Steel
20237011	30.0	M16	1.8	10.0	24	304 Stainless Steel
20237721	30.0	M16	1.8	10.0	24	316 Stainless Steel
20227296	35.0	M4	1.0	2.8	7.0	304 Stainless Steel
20237226	35.0	M4	1.0	2.8	7.0	316 Stainless Steel
20236700	35.0	M5	1.3	3.5	8.0	304 Stainless Steel
20237318	35.0	M5	1.3	3.5	8.0	316 Stainless Steel
20236762	35.0	M6	1.6	4.0	10.0	304 Stainless Steel
20237400	35.0	M6	1.6	4.0	10.0	316 Stainless Steel
20236816	35.0	M8	1.8	5.3	13.0	304 Stainless Steel
20237486	35.0	M8	1.8	5.3	13.0	316 Stainless Steel

Vented Screws - Hex Head

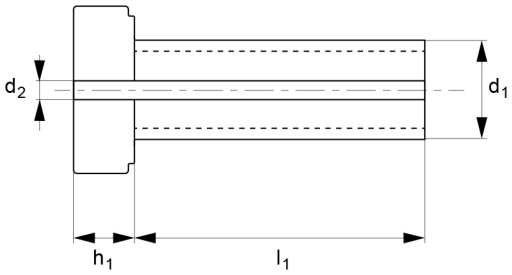

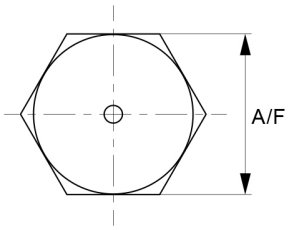



Part Number	l1	d1	d2	H1	A/F	Material
20229993	35.0	M10	1.8	6.4	17.0	304 Stainless Steel
20237578	35.0	M10	1.8	6.4	17.0	316 Stainless Steel
20236953	35.0	M12	1.8	7.5	19.0	304 Stainless Steel
20237660	35.0	M12	1.8	7.5	19.0	316 Stainless Steel
20237028	35.0	M16	1.8	10.0	24	304 Stainless Steel
20237738	35.0	M16	1.8	10.0	24	316 Stainless Steel
20236717	40.0	M5	1.3	3.5	8.0	304 Stainless Steel
20237325	40.0	M5	1.3	3.5	8.0	316 Stainless Steel
20236779	40.0	M6	1.6	4.0	10.0	304 Stainless Steel
20237417	40.0	M6	1.6	4.0	10.0	316 Stainless Steel
20236823	40.0	M8	1.8	5.3	13.0	304 Stainless Steel
20237493	40.0	M8	1.8	5.3	13.0	316 Stainless Steel
20236892	40.0	M10	1.8	6.4	17.0	304 Stainless Steel
20237585	40.0	M10	1.8	6.4	17.0	316 Stainless Steel
20236960	40.0	M12	1.8	7.5	19.0	304 Stainless Steel
20237677	40.0	M12	1.8	7.5	19.0	316 Stainless Steel
20237035	40.0	M16	1.8	10.0	24	304 Stainless Steel
20237745	40.0	M16	1.8	10.0	24	316 Stainless Steel
20236786	45.0	M6	1.6	4.0	10.0	304 Stainless Steel
20237424	45.0	M6	1.6	4.0	10.0	316 Stainless Steel
20236830	45.0	M8	1.8	5.3	13.0	304 Stainless Steel
20237509	45.0	M8	1.8	5.3	13.0	316 Stainless Steel
20236908	45.0	M10	1.8	6.4	17.0	304 Stainless Steel
20237592	45.0	M10	1.8	6.4	17.0	316 Stainless Steel

Vented Screws - Hex Head

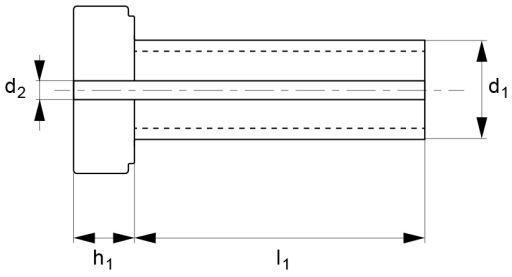

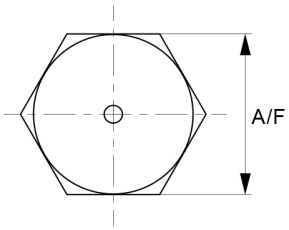



Part Number	l1	d1	d2	H1	A/F	Material
20236977	45.0	M12	1.8	7.5	19.0	304 Stainless Steel
20237684	45.0	M12	1.8	7.5	19.0	316 Stainless Steel
20237042	45.0	M16	1.8	10.0	24	304 Stainless Steel
20237752	45.0	M16	1.8	10.0	24	316 Stainless Steel
20236793	50.0	M6	1.6	4.0	10.0	304 Stainless Steel
20237431	50.0	M6	1.6	4.0	10.0	316 Stainless Steel
20236847	50.0	M8	1.8	5.3	13.0	304 Stainless Steel
20237516	50.0	M8	1.8	5.3	13.0	316 Stainless Steel
20236915	50.0	M10	1.8	6.4	17.0	304 Stainless Steel
20237608	50.0	M10	1.8	6.4	17.0	316 Stainless Steel
20236984	50.0	M12	1.8	7.5	19.0	304 Stainless Steel
20237691	50.0	M12	1.8	7.5	19.0	316 Stainless Steel
20237059	50.0	M16	1.8	10.0	24	304 Stainless Steel
20237769	50.0	M16	1.8	10.0	24	316 Stainless Steel
20236854	55.0	M8	1.8	5.3	13.0	304 Stainless Steel
20237523	55.0	M8	1.8	5.3	13.0	316 Stainless Steel
20236922	55.0	M10	1.8	6.4	17.0	304 Stainless Steel
20237615	55.0	M10	1.8	6.4	17.0	316 Stainless Steel
20236939	60.0	M10	1.8	6.4	17.0	304 Stainless Steel
20237622	60.0	M10	1.8	6.4	17.0	316 Stainless Steel
20236991	60.0	M12	1.8	7.5	19.0	304 Stainless Steel
20237707	60.0	M12	1.8	7.5	19.0	316 Stainless Steel
20237066	60.0	M16	1.8	10.0	24	304 Stainless Steel
20237776	60.0	M16	1.8	10.0	24	316 Stainless Steel

Vented Shoulder Screws - Cap Head

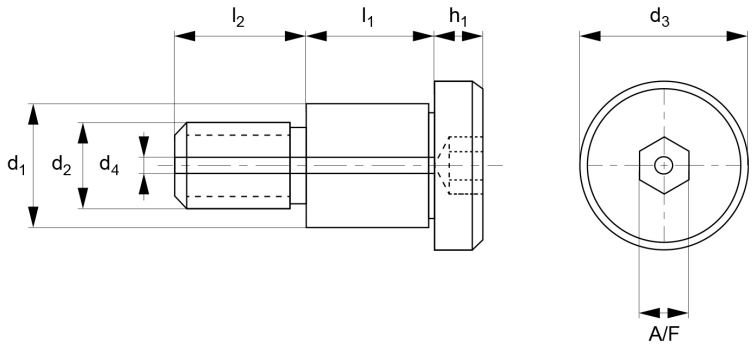



Features

- The shoulder feature of these screws provides additional surface area for improved grip.
- Vented design allows for controlled airflow, making them ideal for applications where proper ventilation is crucial.
- Suited for sealed enclosures, housings, and machinery.

Specifications

Material: 316 Stainless Steel, 303 Stainless Steel

Vented screws are fasteners with a hole drilled through the middle that allow gases trapped at the bottom of a blind threaded hole to escape through the core and provide airflow within an application. The screws are a common option for HV and UHV systems because their centre vent feature reduces virtual leakage from high vacuum systems.

This range of Vented Shoulder Screws features a cap head with a hexagonal drive. Hexagonal drives are suitable for precision assembling and when there is limited surface area and the precision shoulder allows accurate assembly. They are made from Stainless Steel.

Vented Shoulder Screws - Cap Head

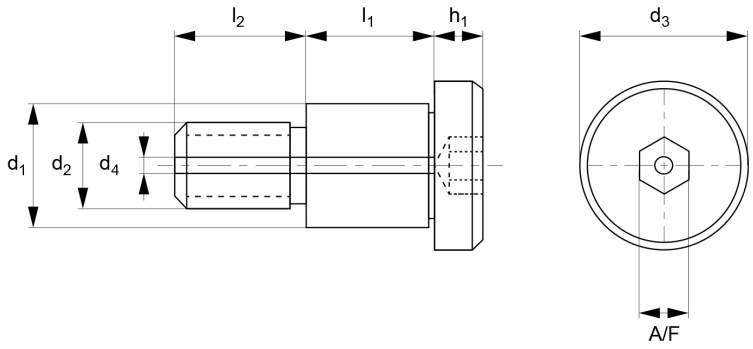



Part Number	l1 +0.05|-0.0	d1 +0|-0.025	d2	D3	d4	H1	l2	A/F	Material
20240257	10.0	3.0	M2	5.0	0.7	2.0	4.0	2.0	303 Stainless Steel
20240783	10.0	3.0	M2	5.0	0.7	2.0	4.0	2.0	316 Stainless Steel
20240264	16.0	3.0	M2	5.0	0.7	2.0	4.0	2.0	303 Stainless Steel
20240790	16.0	3.0	M2	5.0	0.7	2.0	4.0	2.0	316 Stainless Steel
20240271	20.0	3.0	M2	5.0	0.7	2.0	4.0	2.0	303 Stainless Steel
20240806	20.0	3.0	M2	5.0	0.7	2.0	4.0	2.0	316 Stainless Steel
20240288	4.0	4.0	M3	6.0	1.0	3.0	4.0	2.0	303 Stainless Steel
20240813	4.0	4.0	M3	6.0	1.0	3.0	4.0	2.0	316 Stainless Steel
20240295	5.0	4.0	M3	6.0	1.0	3.0	4.0	2.0	303 Stainless Steel
20240820	5.0	4.0	M3	6.0	1.0	3.0	4.0	2.0	316 Stainless Steel
20240301	6.0	4.0	M3	6.0	1.0	3.0	4.0	2.0	303 Stainless Steel
20240837	6.0	4.0	M3	6.0	1.0	3.0	4.0	2.0	316 Stainless Steel
20240318	8.0	4.0	M3	6.0	1.0	3.0	4.0	2.0	303 Stainless Steel
20240844	8.0	4.0	M3	6.0	1.0	3.0	4.0	2.0	316 Stainless Steel
20240325	10.0	4.0	M3	6.0	1.0	3.0	4.0	2.0	303 Stainless Steel
20240851	10.0	4.0	M3	6.0	1.0	3.0	4.0	2.0	316 Stainless Steel
20240332	12.0	4.0	M3	6.0	1.0	3.0	4.0	2.0	303 Stainless Steel
20240868	12.0	4.0	M3	6.0	1.0	3.0	4.0	2.0	316 Stainless Steel
20240349	16.0	4.0	M3	6.0	1.0	3.0	4.0	2.0	303 Stainless Steel
20240875	16.0	4.0	M3	6.0	1.0	3.0	4.0	2.0	316 Stainless Steel
20240356	20.0	4.0	M3	6.0	1.0	3.0	4.0	2.0	303 Stainless Steel
20240882	20.0	4.0	M3	6.0	1.0	3.0	4.0	2.0	316 Stainless Steel
20240363	35.0	4.0	M3	6.0	1.0	3.0	4.0	2.0	303 Stainless Steel

Vented Shoulder Screws - Cap Head

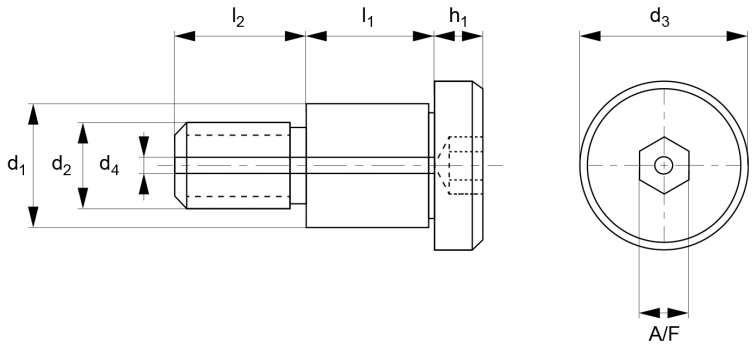



Part Number	l1 +0.05|-0.0	d1 +0|-0.025	d2	D3	d4	H1	l2	A/F	Material
20240899	35.0	4.0	M3	6.0	1.0	3.0	4.0	2.0	316 Stainless Steel
20240370	4.0	5.0	M4	8.0	1.0	4.0	5.0	3.0	303 Stainless Steel
20240905	4.0	5.0	M4	8.0	1.0	4.0	5.0	3.0	316 Stainless Steel
20240387	5.0	5.0	M4	8.0	1.0	4.0	5.0	3.0	303 Stainless Steel
20240912	5.0	5.0	M4	8.0	1.0	4.0	5.0	3.0	316 Stainless Steel
20240394	6.0	5.0	M4	8.0	1.0	4.0	5.0	3.0	303 Stainless Steel
20240929	6.0	5.0	M4	8.0	1.0	4.0	5.0	3.0	316 Stainless Steel
20240400	7.0	5.0	M4	8.0	1.0	4.0	5.0	3.0	303 Stainless Steel
20240936	7.0	5.0	M4	8.0	1.0	4.0	5.0	3.0	316 Stainless Steel
20240417	8.0	5.0	M4	8.0	1.0	4.0	5.0	3.0	303 Stainless Steel
20240943	8.0	5.0	M4	8.0	1.0	4.0	5.0	3.0	316 Stainless Steel
20240424	10.0	5.0	M4	8.0	1.0	4.0	5.0	3.0	303 Stainless Steel
20240950	10.0	5.0	M4	8.0	1.0	4.0	5.0	3.0	316 Stainless Steel
20240431	12.0	5.0	M4	8.0	1.0	4.0	5.0	3.0	303 Stainless Steel
20240967	12.0	5.0	M4	8.0	1.0	4.0	5.0	3.0	316 Stainless Steel
20240448	14.0	5.0	M4	8.0	1.0	4.0	5.0	3.0	303 Stainless Steel
20240974	14.0	5.0	M4	8.0	1.0	4.0	5.0	3.0	316 Stainless Steel
20240455	16.0	5.0	M4	8.0	1.0	4.0	5.0	3.0	303 Stainless Steel
20240981	16.0	5.0	M4	8.0	1.0	4.0	5.0	3.0	316 Stainless Steel
20240462	20.0	5.0	M4	8.0	1.0	4.0	5.0	3.0	303 Stainless Steel
20240998	20.0	5.0	M4	8.0	1.0	4.0	5.0	3.0	316 Stainless Steel
20240479	25.0	5.0	M4	8.0	1.0	4.0	5.0	3.0	303 Stainless Steel
20241001	25.0	5.0	M4	8.0	1.0	4.0	5.0	3.0	316 Stainless Steel

Vented Shoulder Screws - Cap Head

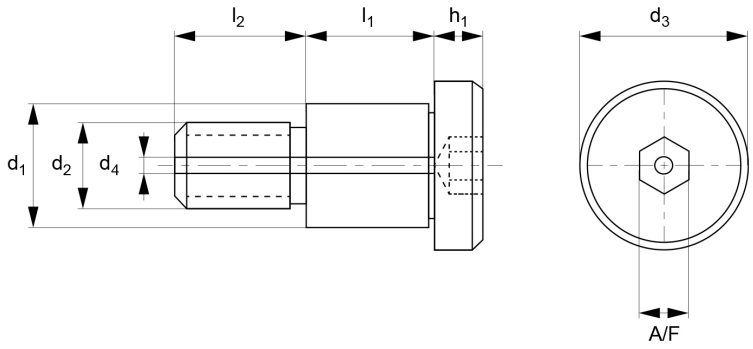



Part Number	l1 +0.05|-0.0	d1 +0|-0.025	d2	D3	d4	H1	l2	A/F	Material
20240486	30.0	5.0	M4	8.0	1.0	4.0	5.0	3.0	303 Stainless Steel
20241018	30.0	5.0	M4	8.0	1.0	4.0	5.0	3.0	316 Stainless Steel
20240493	4.0	6.0	M5	10.0	1.3	5.0	6.0	3.0	303 Stainless Steel
20241025	4.0	6.0	M5	10.0	1.3	5.0	6.0	3.0	316 Stainless Steel
20240509	5.0	6.0	M5	10.0	1.3	5.0	6.0	3.0	303 Stainless Steel
20241032	5.0	6.0	M5	10.0	1.3	5.0	6.0	3.0	316 Stainless Steel
20240516	6.0	6.0	M5	10.0	1.3	5.0	6.0	3.0	303 Stainless Steel
20241049	6.0	6.0	M5	10.0	1.3	5.0	6.0	3.0	316 Stainless Steel
20240523	8.0	6.0	M5	10.0	1.3	5.0	6.0	3.0	303 Stainless Steel
20241056	8.0	6.0	M5	10.0	1.3	5.0	6.0	3.0	316 Stainless Steel
20240530	10.0	6.0	M5	10.0	1.3	5.0	6.0	3.0	303 Stainless Steel
20241063	10.0	6.0	M5	10.0	1.3	5.0	6.0	3.0	316 Stainless Steel
20240547	12.0	6.0	M5	10.0	1.3	5.0	6.0	3.0	303 Stainless Steel
20241070	12.0	6.0	M5	10.0	1.3	5.0	6.0	3.0	316 Stainless Steel
20240554	14.0	6.0	M5	10.0	1.3	5.0	6.0	3.0	303 Stainless Steel
20241087	14.0	6.0	M5	10.0	1.3	5.0	6.0	3.0	316 Stainless Steel
20240561	20.0	6.0	M5	10.0	1.3	5.0	6.0	3.0	303 Stainless Steel
20241094	20.0	6.0	M5	10.0	1.3	5.0	6.0	3.0	316 Stainless Steel
20240578	25.0	6.0	M5	10.0	1.3	5.0	6.0	3.0	303 Stainless Steel
20241100	25.0	6.0	M5	10.0	1.3	5.0	6.0	3.0	316 Stainless Steel
20240585	30.0	6.0	M5	10.0	1.3	5.0	6.0	3.0	303 Stainless Steel
20235727	30.0	6.0	M5	10.0	1.3	5.0	6.0	3.0	316 Stainless Steel
20240592	5.0	8.0	M6	12.0	1.6	6.0	11.0	4.0	303 Stainless Steel

Vented Shoulder Screws - Cap Head

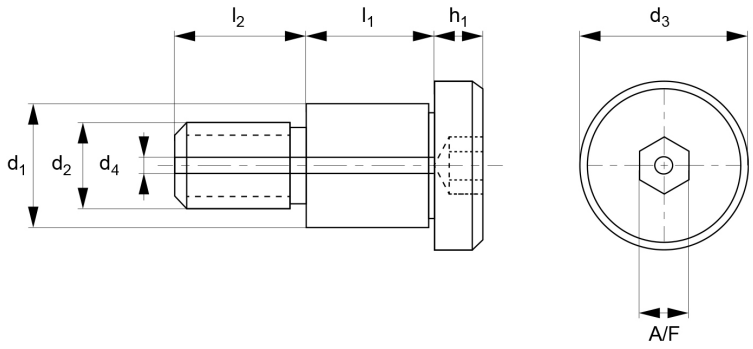



Part Number	l1 +0.05|-0.0	d1 +0|-0.025	d2	D3	d4	H1	l2	A/F	Material
20241117	5.0	8.0	M6	12.0	1.6	6.0	11.0	4.0	316 Stainless Steel
20240608	6.0	8.0	M6	12.0	1.6	6.0	11.0	4.0	303 Stainless Steel
20241124	6.0	8.0	M6	12.0	1.6	6.0	11.0	4.0	316 Stainless Steel
20240615	8.0	8.0	M6	12.0	1.6	6.0	11.0	4.0	303 Stainless Steel
20241131	8.0	8.0	M6	12.0	1.6	6.0	11.0	4.0	316 Stainless Steel
20240622	10.0	8.0	M6	12.0	1.6	6.0	11.0	4.0	303 Stainless Steel
20241148	10.0	8.0	M6	12.0	1.6	6.0	11.0	4.0	316 Stainless Steel
20240639	12.0	8.0	M6	12.0	1.6	6.0	11.0	4.0	303 Stainless Steel
20241155	12.0	8.0	M6	12.0	1.6	6.0	11.0	4.0	316 Stainless Steel
20240646	14.0	8.0	M6	12.0	1.6	6.0	11.0	4.0	303 Stainless Steel
20241162	14.0	8.0	M6	12.0	1.6	6.0	11.0	4.0	316 Stainless Steel
20240653	16.0	8.0	M6	12.0	1.6	6.0	11.0	4.0	303 Stainless Steel
20241179	16.0	8.0	M6	12.0	1.6	6.0	11.0	4.0	316 Stainless Steel
20240660	20.0	8.0	M6	12.0	1.6	6.0	11.0	4.0	303 Stainless Steel
20241186	20.0	8.0	M6	12.0	1.6	6.0	11.0	4.0	316 Stainless Steel
20240677	25.0	8.0	M6	12.0	1.6	6.0	11.0	4.0	303 Stainless Steel
20241193	25.0	8.0	M6	12.0	1.6	6.0	11.0	4.0	316 Stainless Steel
20240684	45.0	8.0	M6	12.0	1.6	6.0	11.0	4.0	303 Stainless Steel
20241209	45.0	8.0	M6	12.0	1.6	6.0	11.0	4.0	316 Stainless Steel
20240691	8.0	10.0	M8	14.0	1.8	7.0	12.0	5.0	303 Stainless Steel
20241216	8.0	10.0	M8	14.0	1.8	7.0	12.0	5.0	316 Stainless Steel
20240707	10.0	10.0	M8	14.0	1.8	7.0	12.0	5.0	303 Stainless Steel
20241223	10.0	10.0	M8	14.0	1.8	7.0	12.0	5.0	316 Stainless Steel

Vented Shoulder Screws - Cap Head

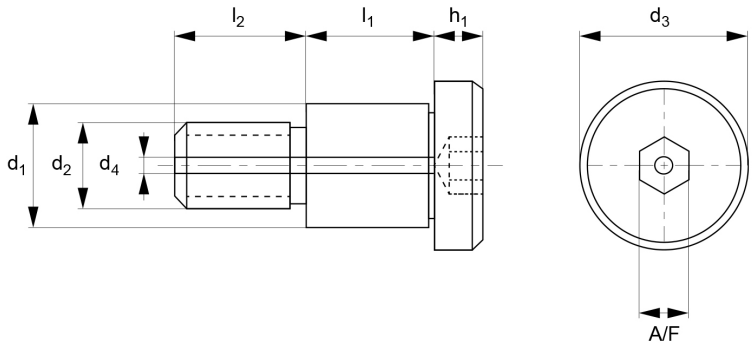



Part Number	l1 +0.05|-0.0	d1 +0|-0.025	d2	D3	d4	H1	l2	A/F	Material
20240714	12.0	10.0	M8	14.0	1.8	7.0	12.0	5.0	303 Stainless Steel
20241230	12.0	10.0	M8	14.0	1.8	7.0	12.0	5.0	316 Stainless Steel
20240721	16.0	10.0	M8	14.0	1.8	7.0	12.0	5.0	303 Stainless Steel
20241247	16.0	10.0	M8	14.0	1.8	7.0	12.0	5.0	316 Stainless Steel
20240738	20.0	10.0	M8	14.0	1.8	7.0	12.0	5.0	303 Stainless Steel
20241254	20.0	10.0	M8	14.0	1.8	7.0	12.0	5.0	316 Stainless Steel
20240745	30.0	10.0	M8	14.0	1.8	7.0	12.0	5.0	303 Stainless Steel
20241261	30.0	10.0	M8	14.0	1.8	7.0	12.0	5.0	316 Stainless Steel
20240752	12.0	12.0	M10	20.0	1.8	8.0	16.0	6.0	303 Stainless Steel
20241278	12.0	12.0	M10	20.0	1.8	8.0	16.0	6.0	316 Stainless Steel
20240769	25.0	12.0	M10	20.0	1.8	8.0	16.0	6.0	303 Stainless Steel
20241285	25.0	12.0	M10	20.0	1.8	8.0	16.0	6.0	316 Stainless Steel
20240776	100.0	16.0	M12	24.0	1.8	11.0	18.0	8.0	303 Stainless Steel
20241292	100.0	16.0	M12	24.0	1.8	11.0	18.0	8.0	316 Stainless Steel

Stainless Vented Washers

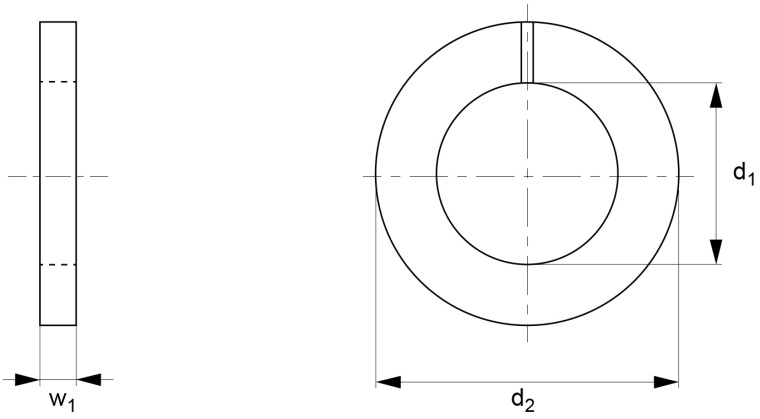



Features

- It is common for HV and UHV systems because their centre vent feature reduces virtual leakage from high vacuum systems.
- Used with bolts, screws or other fasteners to improve the performance and durability of the assembly.
- Used for industrial machinery or automotive components.

Specifications

Material: 303 Stainless Steel

Vented Washers are used with vented screws to aid the quick release of gases from blind tapped holes. The washers are common for HV and UHV systems because their slot vent feature reduces virtual leakage from high vacuum systems.

This range of Stainless Steel vented washers are used with vented screws to improve the speed and performance of creating vacuums in vacuum chambers These vented washers are commonly used for industrial machinery or automotive components.

Stainless Vented Washers

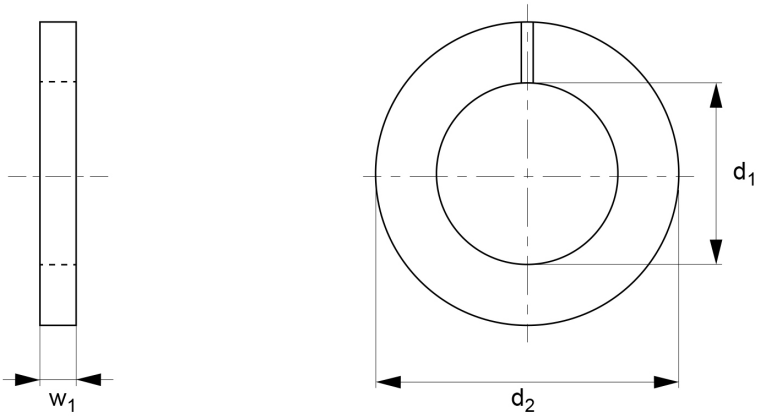



Part Number	For thread d1	d1	d2	w1	Material
20219543	M2	2.2	5.0	0.3	303 Stainless Steel
20219550	M2.5	2.7	6.0	0.5	303 Stainless Steel
20219567	M3	3.2	7.0	0.5	303 Stainless Steel
20219574	M4	4.3	9.0	0.8	303 Stainless Steel
20219581	M5	5.3	10.0	1.0	303 Stainless Steel
20219598	M6	6.4	12.0	1.6	303 Stainless Steel
20219604	M8	8.4	16.0	1.6	303 Stainless Steel
20219611	M10	10.5	20.0	2.0	303 Stainless Steel
20219628	M12	13.0	24.0	2.5	303 Stainless Steel
20219772	M16	17.0	30.0	3.0	303 Stainless Steel
20219789	M20	21.0	37.0	3.0	303 Stainless Steel

Threaded Inserts - Inch

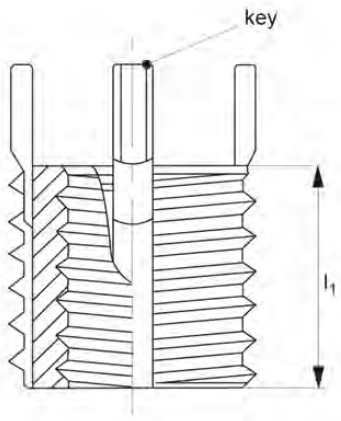

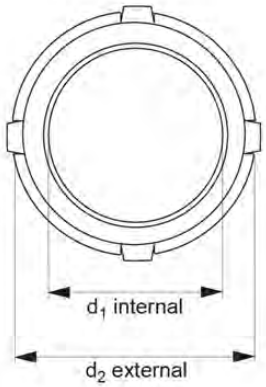



Features

- Threaded inserts with a threaded wall replace stripped or broken threads with stronger threads.
- It can help to avoid thread stripping or distortion that can occur when a screw or bolt is repeatedly inserted and released from the material.
- Once in position, the insert offers a secure fastening that will not move.

Specifications

Material: Carbon Steel, 303 Stainless Steel

Threaded inserts with a threaded wall replace stripped or broken threads with stronger threads, guaranteeing a stable connection. They have an inner thread that allows a bolt or screw to be inserted and firmly attached.

It is simple to install and remove, and it can help to avoid thread stripping or distortion that can occur when a screw or bolt is repeatedly inserted and released from the material. Once in position, the insert offers a secure fastening that will not move.

These are widely utilised in a variety of industrial applications, including in automotive, aerospace, and medical equipment. Threaded Inserts are available in metric or a combination of metric and inch.

Threaded Inserts - Inch

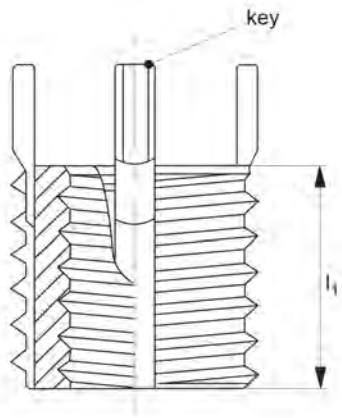

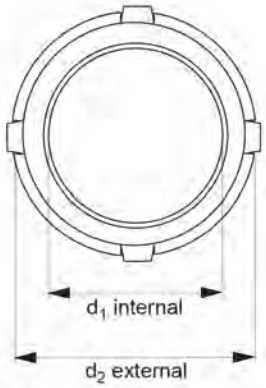



Part Number	Int d1 tol 2B	E x t. d2 tol. 2A	l1	Int. thread type d1	Inst. thread tap tol. 2B	Insert Type	Material
20218478	1/4" - 20	1/2" - 13	0.37	UNC	1/2"-13	Heavy Duty	303 Stainless Steel
20218584	1/4" - 28	1/2" - 13	0.37	UNF	1/2"-13	Heavy Duty	303 Stainless Steel
20217990	3/8"-16	1/2"-13	0.50	UNC	1/2"-13	Thinwall	303 Stainless Steel
20218195	3/8"-16	1/2"-13	050	UNF	1/2"-13	Thinwall	303 Stainless Steel
20218256	5/16"-18	1/2"-13	0.43	UNC	1/2"-13	Heavy Duty	303 Stainless Steel
20218355	5/16"-18	1/2"-13	0.43	UNC	1/2"-13	Heavy Duty	303 Stainless Steel
20218713	3/8"-16	1/2"-13	0.50	UNC	1/2"-13	Thinwall	Carbon Steel
20218775	3/8"-24	1/2"-13	0.50	UNF	1/2"-13	Thinwall	Carbon Steel
20218836	5/16"-18	1/2"-13	0.43	UNC	1/2"-13	Heavy Duty	Carbon Steel
20218973	5/16"-24	1/2"-13	0.43	UNF	1/2"-13	Heavy Duty	Carbon Steel
20218942	1-1/2"-6	1-7/8"-12	2.00	UNC	1-7/8"-12	Heavy Duty	Carbon Steel
20219093	1-1/2"-12	1-7/8"-12	2.00	UNF	1-7/8"-12	Heavy Duty	Carbon Steel
20218935	1-1/4"-7	1-5/8"-12	1.81	UNC	1-5/8"-12	Heavy Duty	Carbon Steel
20219086	1-1/4"-12	1-5/8"-12	1.81	UNF	1-5/8"-12	Heavy Duty	Carbon Steel
20218324	1"-8	1-3/8"-12	1.37	UNC	1-3/8"-12	Heavy Duty	303 Stainless Steel
20218430	1"-12	1-3/8"-12	1.37	UNF	1-3/8"-12	Heavy Duty	303 Stainless Steel
20218911	1"-8	1-3/8"-12	1.37	UNC	1-3/8"-12	Heavy Duty	Carbon Steel
20219055	1"-12	1-3/8"-12	1.37	UNF	1-3/8"-12	Heavy Duty	Carbon Steel
20219062	1"-14	1-3/8"-12	1.37	UNF	1-3/8"-12	Heavy Duty	Carbon Steel
20218928	1-1/8"-7	1-1/2"-12	1.62	UNC	1-1/2"-12	Heavy Duty	Carbon Steel

Threaded Inserts - Inch

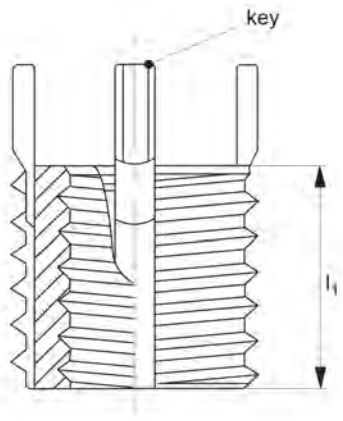

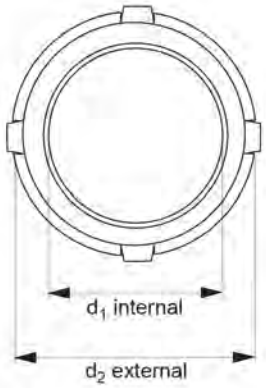



Part Number	Int d1 tol 2B	E x t. d2 tol. 2A	l1	Int. thread type d1	Inst. thread tap tol. 2B	Insert Type	Material
20219079	1-1/8"-12	1-1/2"-12	1.62	UNF	1-1/2"-12	Heavy Duty	Carbon Steel
20219130	1/4" - 20	1/2" - 13	0.37	UNC	1/2"-13	Heavy Duty	Carbon Steel
20219246	1/4" - 28	1/2" - 13	0.37	UNF	1/2"-13	Heavy Duty	Carbon Steel
20218317	7/8"-9	1-1/4"-12	1.25	UNC	1-1/4"-12	Heavy Duty	303 Stainless Steel
20218423	7/8"-14	1-1/4"-12	1.25	UNF	1-1/4"-12	Heavy Duty	303 Stainless Steel
20218904	7/8"-9	1-1/4"-12	1.25	UNC	1-1/4"-12	Heavy Duty	Carbon Steel
20219048	7/8"-14	1-1/4"-12	1.25	UNF	1-1/4"-12	Heavy Duty	Carbon Steel
20218300	3/4"-10	1-1/8"-12	1.12	UNC	1-1/8"-12	Heavy Duty	303 Stainless Steel
20218416	3/4"-16	1-1/8"-12	1.12	UNF	1-1/8"-12	Heavy Duty	303 Stainless Steel
20218898	3/4"-10	1-1/8"-12	1.12	UNC	1-1/8"-12	Heavy Duty	Carbon Steel
20219031	3/4"-16	1-1/8"-12	1.12	UNF	1-1/8"-12	Heavy Duty	Carbon Steel
20218539	5/8" - 11	1" - 12	0.87	UNC	1"-12	Heavy Duty	303 Stainless Steel
20218645	5/8" - 18	1" - 12	0.87	UNF	1"-12	Heavy Duty	303 Stainless Steel
20219192	5/8" - 11	1" - 12	0.87	UNC	1"-12	Heavy Duty	Carbon Steel
20219307	5/8" - 18	1" - 12	0.87	UNF	1"-12	Heavy Duty	Carbon Steel
20218560	1" - 8	1 - 1/2" - 12	1.37	UNC	1-1/2"-12	Heavy Duty	303 Stainless Steel
20218676	1" - 12	1 - 1/2" - 12	1.37	UNF	1-1/2"-12	Heavy Duty	303 Stainless Steel
20219222	1" - 8	1 - 1/2" - 12	1.37	UNC	1-1/2"-12	Heavy Duty	Carbon Steel
20219338	1" - 12	1 - 1/2" - 12	1.37	UNF	1-1/2"-12	Heavy Duty	Carbon Steel
20218546	3/4" - 10	1 - 1/4" - 12	1.12	UNC	1-1/4"-12	Heavy Duty	303 Stainless Steel

Threaded Inserts - Inch

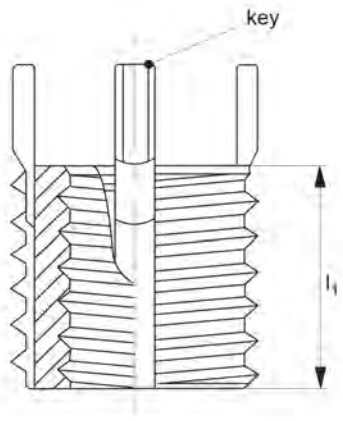

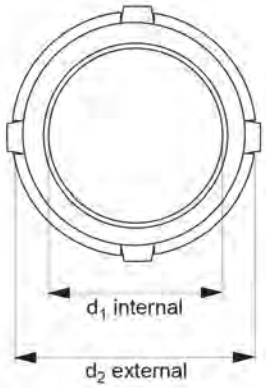



Part Number	Int d1 tol 2B	E x t. d2 tol. 2A	l1	Int. thread type d1	Inst. thread tap tol. 2B	Insert Type	Material
20218652	3/4" - 16	1 - 1/4" - 12	1.12	UNF	1-1/4"-12	Heavy Duty	303 Stainless Steel
20219208	3/4" - 10	1 - 1/4" - 12	1.12	UNC	1-1/4"-12	Heavy Duty	Carbon Steel
20219314	3/4" - 16	1 - 1/4" - 12	1.12	UNF	1-1/4"-12	Heavy Duty	Carbon Steel
20218553	7/8" - 9	1 - 3/8" - 12	1.25	UNC	1-3/8"-12	Heavy Duty	303 Stainless Steel
20218669	7/8" - 14	1 - 3/8" - 12	1.25	UNF	1-3/8"-12	Heavy Duty	303 Stainless Steel
20219215	7/8" - 9	1 - 3/8" - 12	1.25	UNC	1-3/8"-12	Heavy Duty	Carbon Steel
20219321	7/8" - 14	1 - 3/8" - 12	1.25	UNF	1-3/8"-12	Heavy Duty	Carbon Steel
20218508	7/16" - 14	3/4" - 16	0.62	UNC	3/4"-16	Heavy Duty	303 Stainless Steel
20219161	7/6" - 14	3/4" - 16	0.62	UNC	3/4"-16	Heavy Duty	Carbon Steel
20219277	7/6" - 20	3/4" - 16	0.62	UNF	3/4"-16	Heavy Duty	Carbon Steel
20217907	1/2"-13	3/4"-16	0.62	UNC	3/4"-16	Heavy Duty	303 Stainless Steel
20218287	9/16"-12	3/4"-16	0.81	UNC	3/4"-16	Heavy Duty	303 Stainless Steel
20218386	1/2"-20	3/4"-16	0.62	UNF	3/4"-16	Heavy Duty	303 Stainless Steel
20218393	9/16"-18	3/4"-16	0.81	UNF	3/4"-16	Heavy Duty	303 Stainless Steel
20218867	1/2"-13	3/4"-16	0.62	UNC	3/4"-16	Heavy Duty	Carbon Steel
20218874	9/16"-12	3/4"-16	0.81	UNC	3/4"-16	Heavy Duty	Carbon Steel
20219000	1/2"-20	3/4"-16	0.62	UNF	3/4"-16	Heavy Duty	Carbon Steel
20219017	9/16"-18	3/4"-16	0.81	UNF	3/4"-16	Heavy Duty	Carbon Steel
20218454	8-32	3/8" - 16	0.31	UNC	3/8"-16	Heavy Duty	303 Stainless Steel
20219116	8 - 32	3/8" - 16	0.31	UNC	3/8"-16	Heavy Duty	Carbon Steel

Threaded Inserts - Inch

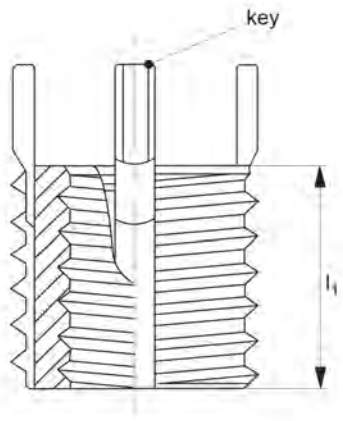

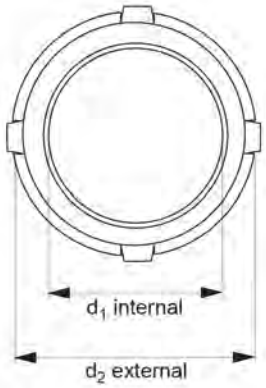



Part Number	Int d1 tol 2B	E x t. d2 tol. 2A	l1	Int. thread type d1	Inst. thread tap tol. 2B	Insert Type	Material
20217938	1/4"-20	3/8"-16	0.37	UNC	3/8"-16	Thinwall	303 Stainless Steel
20218171	1/4"-28	3/8"-16	0.37	UNF	3/8"-16	Thinwall	303 Stainless Steel
20218232	10-24	3/8"-16	0.31	UNC	3/8"-16	Heavy Duty	303 Stainless Steel
20218331	10-32	3/8"-16	0.31	UNF	3/8"-16	Heavy Duty	303 Stainless Steel
20218690	1/4"-20	3/8"-16	0.37	UNC	3/8"-16	Thinwall	Carbon Steel
20218751	1/4"-28	3/8"-16	0.37	UNF	3/8"-16	Thinwall	Carbon Steel
20218812	10-24	3/8"-16	0.31	UNC	3/8"-16	Heavy Duty	Carbon Steel
20218959	10-32	3/8"-16	0.31	UNF	3/8"-16	Heavy Duty	Carbon Steel
20218492	3/8" - 16	5/8" - 11	0.50	UNC	5/8"-11	Heavy Duty	303 Stainless Steel
20218607	3/8" - 24	5/8" - 11	0.50	UNF	5/8"-11	Heavy Duty	303 Stainless Steel
20218614	7/16" - 20	5/8" - 11	0.62	UNF	3/4"-16	Heavy Duty	303 Stainless Steel
20219154	3/8" - 16	5/8" - 11	0.50	UNC	5/8"-11	Heavy Duty	Carbon Steel
20219260	3/8" - 24	5/8" - 11	0.50	UNF	5/8"-11	Heavy Duty	Carbon Steel
20218157	1/2"-13	5/8"-11	0.62	UNC	5/8"-11	Thinwall	303 Stainless Steel
20218218	1/2"-20	5/8"-11	0.62	UNF	5/8"-11	Thinwall	303 Stainless Steel
20218270	7/16"-14	5/8"-11	0.62	UNC	5/8"-11	Heavy Duty	303 Stainless Steel
20218379	7/16"-20	5/8"-11	0.62	UNF	5/8"-11	Heavy Duty	303 Stainless Steel
20218737	1/2"-13	5/8"-11	0.62	UNC	5/8"-11	Thinwall	Carbon Steel
20218799	1/2"-20	5/8"-11	0.62	UNF	5/8"-11	Thinwall	Carbon Steel
20218850	7/16"-14	5/8"-11	0.62	UNC	5/8"-11	Heavy Duty	Carbon Steel

Threaded Inserts - Inch

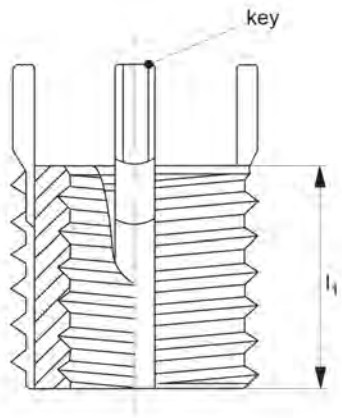

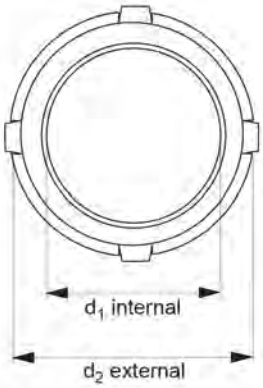



Part Number	Int d1 tol 2B	E x t. d2 tol. 2A	l1	Int. thread type d1	Inst. thread tap tol. 2B	Insert Type	Material
20218997	7/16"-20	5/8"-11	0.62	UNF	5/8"-11	Heavy Duty	Carbon Steel
20218447	6-32	5/16" - 18	0.31	UNC	5/16"-18	Heavy Duty	303 Stainless Steel
20219109	6 - 32	5/16" - 18	0.31	UNC	5/16"-18	Heavy Duty	Carbon Steel
20218126	10-24	5/16"-18	0.31	UNC	5/16"-18	Thinwall	303 Stainless Steel
20218164	10-32	5/16"-18	0.31	UNF	5/16"-18	Thinwall	303 Stainless Steel
20218225	8-32	5/16"-18	0.31	UNC	5/16"-18	Heavy Duty	303 Stainless Steel
20218683	10-24	5/16"-18	0.31	UNC	5/16"-18	Thinwall	Carbon Steel
20218744	10-32	5/16"-18	0.31	UNF	5/16"-18	Thinwall	Carbon Steel
20218805	8-32	5/16"-18	0.31	UNC	5/16"-18	Heavy Duty	Carbon Steel
20218515	1/2" - 13	7/8" - 14	0.68	UNC	7/8"-14	Heavy Duty	303 Stainless Steel
20218522	9/16" - 12	7/8" - 14	0.81	UNC	7/8"-14	Heavy Duty	303 Stainless Steel
20218621	1/2" - 20	7/8" - 14	0.68	UNF	7/8"-14	Heavy Duty	303 Stainless Steel
20218638	9/16" - 18	7/8" - 14	0.81	UNF	7/8"-14	Heavy Duty	303 Stainless Steel
20219178	1/2" - 13	7/8" - 14	0.68	UNC	7/8"-14	Heavy Duty	Carbon Steel
20219185	9/16" - 12	7/8" - 14	0.81	UNC	7/8"-14	Heavy Duty	Carbon Steel
20219284	1/2" - 13	7/8" - 14	0.68	UNF	7/8"-14	Heavy Duty	Carbon Steel
20219291	9/16" - 18	7/8" - 14	0.81	UNF	7/8"-14	Heavy Duty	Carbon Steel
20218294	5/8"-11	7/8"-14	0.87	UNC	7/8"-14	Heavy Duty	303 Stainless Steel
20218409	5/8"-18	7/8"-14	0.87	UNF	7/8"-14	Heavy Duty	303 Stainless Steel
20218881	5/8"-11	7/8"-14	0.87	UNC	7/8"-14	Heavy Duty	Carbon Steel

Threaded Inserts - Inch

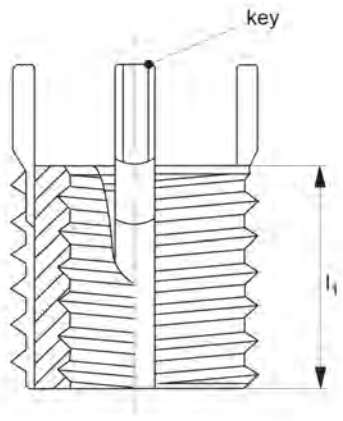

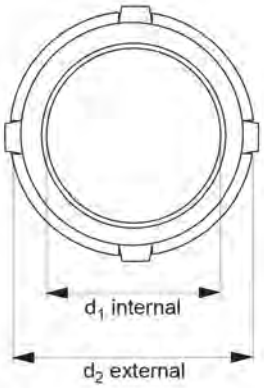



Part Number	Int d1 tol 2B	E x t. d2 tol. 2A	l1	Int. thread type d1	Inst. thread tap tol. 2B	Insert Type	Material
20219024	5/8"-18	7/8"-14	0.87	UNF	7/8"-14	Heavy Duty	Carbon Steel
20218461	10-24	7/16" - 14	0.31	UNC	7/16"-14	Heavy Duty	303 Stainless Steel
20218577	10-32	7/16" - 14	0.31	UNF	7/16"-14	Heavy Duty	303 Stainless Steel
20219123	10 - 24	7/16" - 14	0.31	UNC	7/16"-14	Heavy Duty	Carbon Steel
20219239	10 - 32	7/16" - 14	0.31	UNF	7/16"-14	Heavy Duty	Carbon Steel
20218133	5/16"-18	7/16"-14	0.43	UNC	7/16"-14	Thinwall	303 Stainless Steel
20218188	5/16"-24	7/16"-14	0.43	UNF	7/16"-14	Thinwall	303 Stainless Steel
20218249	1/4"-20	7/16"-14	0.37	UNC	7/16"-14	Heavy Duty	303 Stainless Steel
20218348	1/4"-28	7/16"-14	0.37	UNF	7/16"-14	Heavy Duty	303 Stainless Steel
20218706	5/16"-18	7/16"-14	0.43	UNC	7/16"-14	Thinwall	Carbon Steel
20218768	5/16"-24	7/16"-14	0.43	UNF	7/16"-14	Thinwall	Carbon Steel
20218829	1/4"-20	7/16"-14	0.37	UNC	7/16"-14	Heavy Duty	Carbon Steel
20218966	1/4"-28	7/16"-14	0.37	UNF	7/16"-14	Heavy Duty	Carbon Steel
20218485	5/16" - 18	9/16" - 12	0.43	UNC	9/16"-12	Heavy Duty	303 Stainless Steel
20218591	5/16" - 24	9/16" - 12	0.43	UNF	9/16"-12	Heavy Duty	303 Stainless Steel
20219147	5/16" - 18	9/16" - 12	0.43	UNC	9/16"-12	Heavy Duty	Carbon Steel
20219253	5/16" - 24	9/16" - 12	0.43	UNF	9/16"-12	Heavy Duty	Carbon Steel
20218140	7/16"-14	9/16"-12	0.56	UNC	9/16"-12	Thinwall	303 Stainless Steel
20218201	7/16"-20	9/16"-12	0.56	UNF	9/16"-12	Thinwall	303 Stainless Steel
20218263	3/8"-16	9/16"-12	0.50	UNC	9/16"-12	Heavy Duty	303 Stainless Steel

Threaded Inserts - Inch

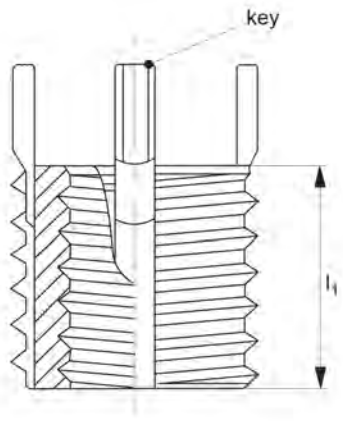

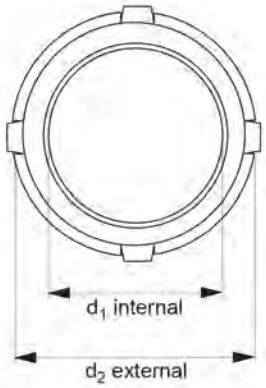



Part Number	Int d1 tol 2B	E x t. d2 tol. 2A	l1	Int. thread type d1	Inst. thread tap tol. 2B	Insert Type	Material
20218362	3/8"-24	9/16"-12	0.50	UNF	9/16"-12	Heavy Duty	303 Stainless Steel
20218720	7/16"-14	9/16"-12	0.56	UNC	9/16"-12	Thinwall	Carbon Steel
20218782	7/16"-20	9/16"-12	0.56	UNF	9/16"-12	Thinwall	Carbon Steel
20218843	3/8"-16	9/16"-12	0.50	UNC	9/16"-12	Heavy Duty	Carbon Steel
20218980	3/8"-24	9/16"-12	0.50	UNF	9/16"-12	Heavy Duty	Carbon Steel

Threaded Inserts - Metric

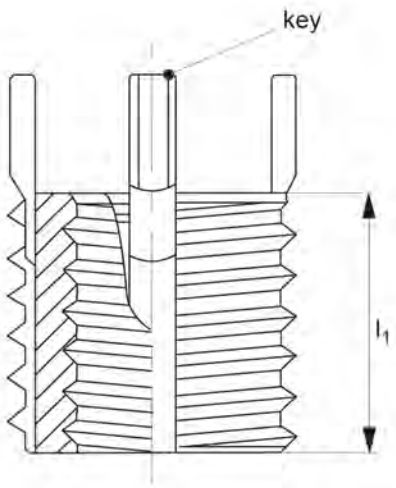

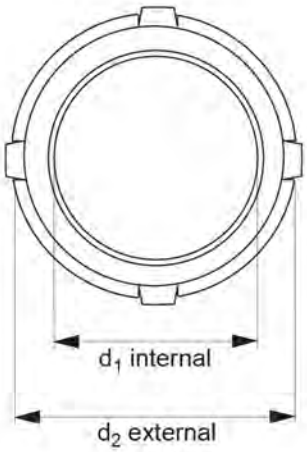





Features

- Threaded inserts with a threaded wall replace stripped or broken threads with stronger threads.
- It can help to avoid thread stripping or distortion that can occur when a screw or bolt is repeatedly inserted and released from the material.
- Once in position, the insert offers a secure fastening that will not move.

Specifications

Material: Carbon Steel, 303 Stainless Steel

Threaded inserts with a threaded wall replace stripped or broken threads with stronger threads, guaranteeing a stable connection. They have an inner thread that allows a bolt or screw to be inserted and firmly attached.

It is simple to install and remove, and it can help to avoid thread stripping or distortion that can occur when a screw or bolt is repeatedly inserted and released from the material. Once in position, the insert offers a secure fastening that will not move.

These are widely utilised in a variety of industrial applications, including in automotive, aerospace, and medical equipment.

Threaded Inserts - Metric

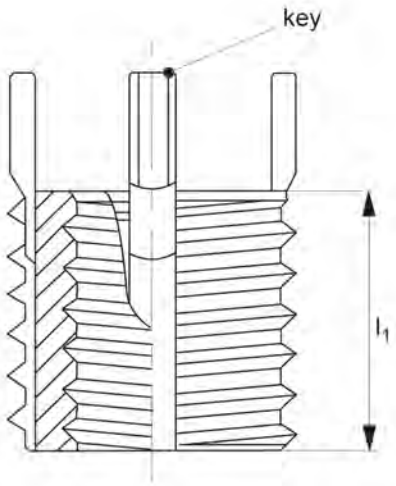

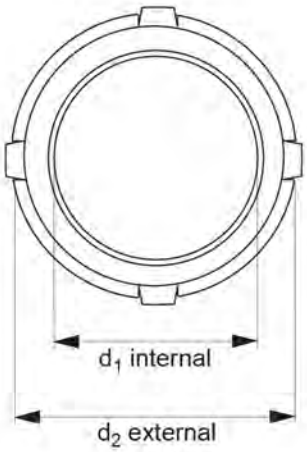





Part Number	Int. d1 tol. 6H	Int. thread type d1	E x t. thread type d2	l1	Inst. tap drill size	Insert Type	Material
20217815	M5 x 0.80	Coarse	Coarse	8.0	6.9	Thinwall	303 Stainless Steel
20217822	M6 x 1.00	Coarse	Fine	10.0	8.8	Thinwall	303 Stainless Steel
20217839	M8 x 1.25	Coarse	Fine	12.0	10.8	Thinwall	303 Stainless Steel
20217846	M10 x 1.50	Coarse	Fine	14.0	12.8	Thinwall	303 Stainless Steel
20217853	M12 x 1.75	Coarse	Fine	16.0	14.2	Thinwall	303 Stainless Steel
20217587	M4 x 0.70	Coarse	Coarse	8.0	6.9	Heavy Duty	303 Stainless Steel
20217594	M5 x 0.80	Coarse	Fine	10.0	8.8	Heavy Duty	303 Stainless Steel
20217600	M6 x 1.00	Coarse	Fine	12.0	10.8	Heavy Duty	303 Stainless Steel
20217617	M8 x 1.25	Coarse	Fine	14.0	12.8	Heavy Duty	303 Stainless Steel
20217631	M10 x 1.50	Coarse	Fine	16.0	14.8	Heavy Duty	303 Stainless Steel
20217945	M12 x 1.75	Coarse	Fine	18.0	16.8	Heavy Duty	303 Stainless Steel
20217662	M14 x 2.00	Coarse	Fine	20.0	18.8	Heavy Duty	303 Stainless Steel
20217686	M16 x 2.00	Coarse	Fine	22.0	20.5	Heavy Duty	303 Stainless Steel
20217716	M20 x 2.50	Coarse	Non-Std	30.0	28.0	Heavy Duty	303 Stainless Steel
20217747	M24 x 3.00	Coarse	Non-Std	33.0	31.0	Heavy Duty	303 Stainless Steel
20217761	M 5 x 0.80	Coarse	Coarse	8.0	6.9	Thinwall	Carbon Steel
20217778	M 6 x 1.00	Coarse	Fine	10.0	8.8	Thinwall	Carbon Steel
20217785	M 8 x 1.25	Coarse	Fine	12.0	10.8	Thinwall	Carbon Steel
20217792	M10 x 1.50	Coarse	Fine	14.0	12.8	Thinwall	Carbon Steel

Threaded Inserts - Metric

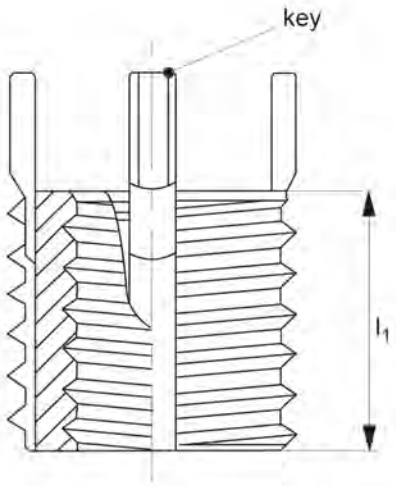

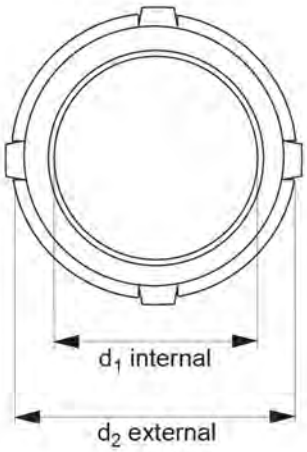





Part Number	Int. d1 tol. 6H	Int. thread type d1	E x t. thread type d2	l1	Inst. tap drill size	Insert Type	Material
20217808	M12 x 1.75	Coarse	Fine	16.0	14.8	Thinwall	Carbon Steel
20217433	M 4 x 0.70	Coarse	Coarse	8.0	6.9	Heavy Duty	Carbon Steel
20217914	M 5 x 0.80	Coarse	Fine	10.0	8.8	Heavy Duty	Carbon Steel
20217440	M 6 x 1.00	Coarse	Fine	12.0	10.8	Heavy Duty	Carbon Steel
20217457	M 8 x 1.25	Coarse	Fine	14.0	12.8	Heavy Duty	Carbon Steel
20217464	M10 x 1.50	Coarse	Fine	16.0	14.8	Heavy Duty	Carbon Steel
20217471	M12 x 1.75	Coarse	Fine	18.0	16.8	Heavy Duty	Carbon Steel
20217488	M14 x 2.00	Coarse	Fine	20.0	18.8	Heavy Duty	Carbon Steel
20217495	M16 x 2.00	Coarse	Fine	22.0	20.5	Heavy Duty	Carbon Steel
20217501	M20 x 2.50	Coarse	Non-Std	30.0	28.0	Heavy Duty	Carbon Steel
20217891	M24 x 3.00	Coarse	Non-Std	33.0	31.0	Heavy Duty	Carbon Steel
20218003	M6 x 1.00	Coarse	UNC	0.3	21/64”	Heavy Duty	303 Stainless Steel
20218010	M8 x 1.25	Coarse	UNC	0.4	29/64”	Heavy Duty	303 Stainless Steel
20218027	M10 x 1.50	Coarse	UNC	0.5	37/64”	Heavy Duty	303 Stainless Steel
20218034	M12 x 1.75	Coarse	UNF	0.6	45/64”	Heavy Duty	303 Stainless Steel
20218041	M14 x 2.00	Coarse	UNF	0.8	53/64”	Heavy Duty	303 Stainless Steel
20218058	M16 x 2.00	Coarse	UNF	0.9	15/16”	Heavy Duty	303 Stainless Steel
20218065	M6 x 1.00	Coarse	UNC	0.31	21/64”	Heavy Duty	Carbon Steel
20218072	M8 x 1.25	Coarse	UNC	0.43	29/64”	Heavy Duty	Carbon Steel

Threaded Inserts - Metric

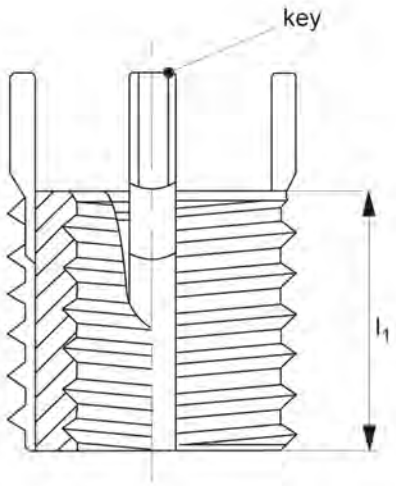

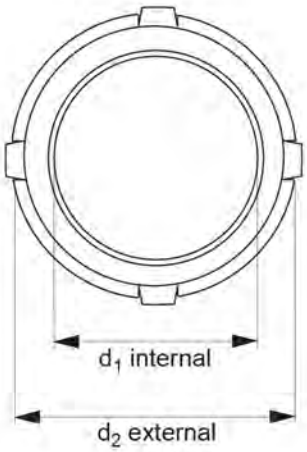





Part Number	Int. d1 tol. 6H	Int. thread type d1	E x t. thread type d2	l1	Inst. tap drill size	Insert Type	Material
20218089	M10 x 1.50	Coarse	UNC	0.50	37/64”	Heavy Duty	Carbon Steel
20218096	M12 x 1.75	Coarse	UNF	0.62	45/64”	Heavy Duty	Carbon Steel
20218102	M14 x 2.00	Coarse	UNF	0.81	53/64”	Heavy Duty	Carbon Steel
20218119	M16 x 2.00	Coarse	UNF	0.87	15/16”	Heavy Duty	Carbon Steel
20217860	M8 x 1.00	Fine	Fine	12.0	10.8	Thinwall	303 Stainless Steel
20217877	M10 x 1.25	Fine	Fine	14.0	12.8	Thinwall	303 Stainless Steel
20217884	M12 x 1.25	Fine	Fine	16.0	14.8	Thinwall	303 Stainless Steel
20217624	M 8 x 1.00	Fine	Fine	14.0	12.8	Heavy Duty	303 Stainless Steel
20217648	M10 x 1.25	Fine	Fine	16.0	14.8	Heavy Duty	303 Stainless Steel
20217655	M12 x 1.25	Fine	Fine	18.0	16.8	Heavy Duty	303 Stainless Steel
20217679	M14 x 1.50	Fine	Fine	20.0	18.8	Heavy Duty	303 Stainless Steel
20217693	M16 x 1.50	Fine	Fine	22.0	20.5	Heavy Duty	303 Stainless Steel
20217709	M18 x 1.50	Fine	Fine	24.0	22.5	Heavy Duty	303 Stainless Steel
20217723	M20 x 1.50	Fine	Non-Std	30.0	28.0	Heavy Duty	303 Stainless Steel
20217730	M22 x 1.50	Fine	Non-Std	32.0	30.0	Heavy Duty	303 Stainless Steel
20217754	M24 x 2.00	Fine	Non-Std	33.0	31.0	Heavy Duty	303 Stainless Steel
20217976	M 8 x 1.00	Fine	Fine	12.0	10.8	Thinwall	Carbon Steel
20217983	M10 x 1.25	Fine	Fine	14.0	12.8	Thinwall	Carbon Steel
20217921	M12 x 1.25	Fine	Fine	16.0	14.8	Thinwall	Carbon Steel

Threaded Inserts - Metric

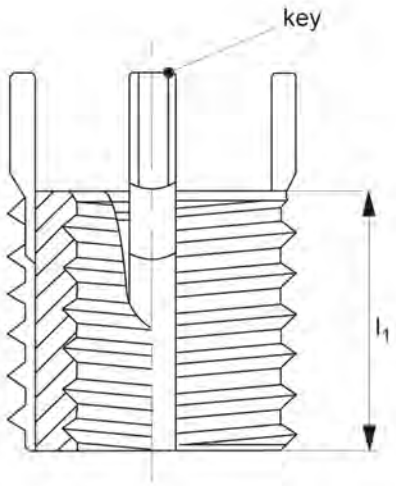

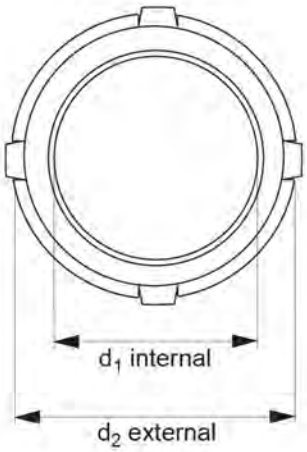





Part Number	Int. d1 tol. 6H	Int. thread type d1	E x t. thread type d2	l1	Inst. tap drill size	Insert Type	Material
20217518	M 8 x 1.00	Fine	Fine	14.0	12.8	Heavy Duty	Carbon Steel
20217525	M10 x 1.25	Fine	Fine	16.0	14.8	Heavy Duty	Carbon Steel
20217532	M12 x 1.25	Fine	Fine	18.0	16.8	Heavy Duty	Carbon Steel
20217952	M14 x 1.50	Fine	Fine	20.0	18.8	Heavy Duty	Carbon Steel
20217549	M16 x 1.50	Fine	Fine	22.0	20.5	Heavy Duty	Carbon Steel
20217556	M18 x 1.50	Fine	Fine	24.0	22.5	Heavy Duty	Carbon Steel
20217563	M20 x 1.50	Fine	Non-Std	30.0	28.0	Heavy Duty	Carbon Steel
20217570	M22 x 1.50	Fine	Non-Std	32.0	30.0	Heavy Duty	Carbon Steel
20217969	M24 x 2.00	Fine	Non-Std	33.0	31.0	Heavy Duty	Carbon Steel

Anti-Vibration Cylinders

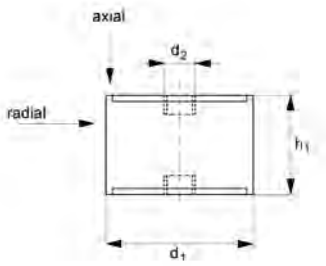

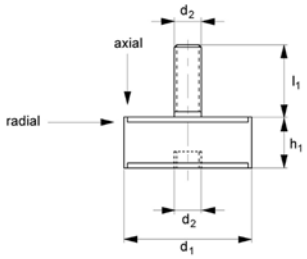

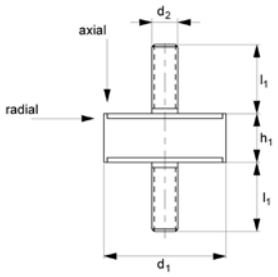



Features

- It dampens shocks, and absorbs and dissipates vibrations.
- It should never be mounted in tension, but in even load.
- Used only in axial or radial directions.

Specifications

Material: Steel

These Cylinders are designed to dampen shocks, and absorb and dissipate vibrations, reducing the impact on surrounding equipment or structures.

By effectively dampening vibrations, anti-vibration cylinders help improve equipment performance, reliability, and lifespan. Furthermore, the dampening action of these cylinders helps to minimise the noise created by vibrations, resulting in a calmer and more comfortable working environment.

They should never be mounted in tension but in even load and should only be utilised in axial or radial directions. They are often used in machinery, compressors, air conditioning units, and light engineering equipment.

Anti-Vibration Cylinders

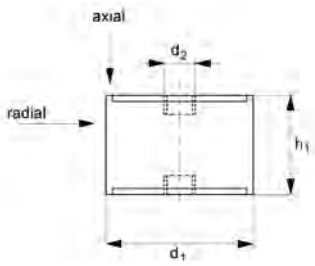

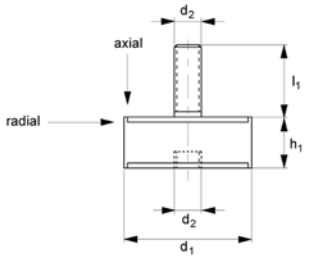

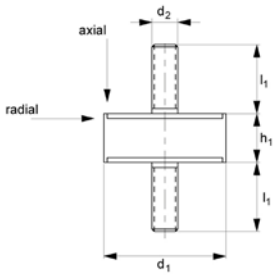



Part Number	Thread Type	d1	h1	d2	Material
20195625	Male/Male	6.0	7.0	M3	Steel
20195748	Male/Male	8.0	8.0	M3	Steel
20195755	Male/Male	9.0	12.0	M4	Steel
20195151	Male/Male	10.0	8.0	M4	Steel
20195144	Male/Male	10.0	10.0	M4	Steel
20195236	Male/Male	15.0	8.0	M4	Steel
20195175	Male/Male	15.0	10.0	M4	Steel
20197186	Male/Male	15.0	10.0	M5	Steel
20195182	Male/Male	15.0	15.0	M4	Steel
20197193	Male/Male	15.0	15.0	M5	Steel
20195199	Male/Male	15.0	20.0	M4	Steel
20197209	Male/Male	15.0	20.0	M5	Steel
20195205	Male/Male	15.0	22.0	M4	Steel
20195212	Male/Male	15.0	25.0	M4	Steel
20195229	Male/Male	15.0	28.0	M4	Steel
20197216	Male/Male	16.0	8.0	M4	Steel
20197223	Male/Male	16.0	8.0	M5	Steel
20197230	Male/Male	16.0	10.0	M4	Steel
20197247	Male/Male	16.0	10.0	M5	Steel
20195243	Male/Male	16.0	15.0	M4	Steel

Anti-Vibration Cylinders

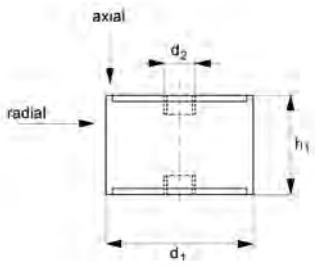

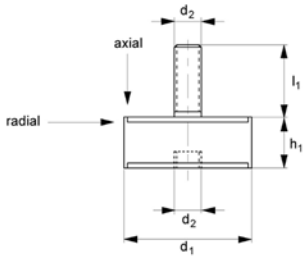

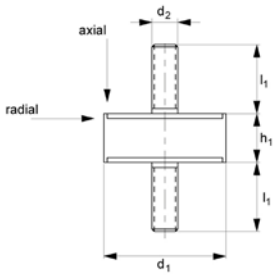



Part Number	Thread Type	d1	h1	d2	Material
20197254	Male/Male	16.0	15.0	M5	Steel
20197261	Male/Male	16.0	20.0	M4	Steel
20197278	Male/Male	16.0	20.0	M5	Steel
20197285	Male/Male	16.0	25.0	M4	Steel
20197292	Male/Male	16.0	25.0	M5	Steel
20195267	Male/Male	18.0	7.5	M6	Steel
20195274	Male/Male	18.0	8.5	M6	Steel
20195250	Male/Male	18.0	12.0	M6	Steel
20195342	Male/Male	20.0	9.0	M6	Steel
20195281	Male/Male	20.0	10.0	M6	Steel
20195298	Male/Male	20.0	15.0	M6	Steel
20195304	Male/Male	20.0	20.0	M6	Steel
20195311	Male/Male	20.0	25.0	M6	Steel
20195328	Male/Male	20.0	30.0	M6	Steel
20195335	Male/Male	20.0	35.0	M6	Steel
20195359	Male/Male	25.0	10.0	M6	Steel
20197179	Male/Male	25.0	10.0	M6	Steel
20195366	Male/Male	25.0	15.0	M6	Steel
20197308	Male/Male	25.0	15.0	M8	Steel
20195373	Male/Male	25.0	20.0	M6	Steel

Anti-Vibration Cylinders

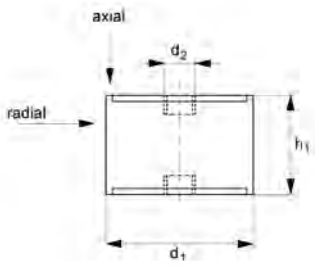

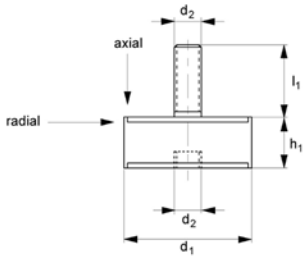

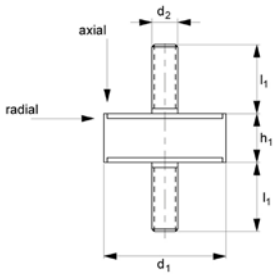



Part Number	Thread Type	d1	h1	d2	Material
20197315	Male/Male	25.0	20.0	M8	Steel
20197322	Male/Male	25.0	22.0	M6	Steel
20197339	Male/Male	25.0	22.0	M8	Steel
20195380	Male/Male	25.0	25.0	M6	Steel
20197346	Male/Male	25.0	25.0	M8	Steel
20195397	Male/Male	25.0	30.0	M6	Steel
20197353	Male/Male	25.0	30.0	M8	Steel
20195403	Male/Male	25.0	40.0	M6	Steel
20197360	Male/Male	25.0	40.0	M8	Steel
20196974	Male/Male	30.0	10.0	M8	Steel
20195410	Male/Male	30.0	15.0	M8	Steel
20195427	Male/Male	30.0	20.0	M8	Steel
20195434	Male/Male	30.0	25.0	M8	Steel
20195441	Male/Male	30.0	30.0	M8	Steel
20197377	Male/Male	30.0	40.0	M8	Steel
20197384	Male/Male	35.0	35.0	M8	Steel
20195458	Male/Male	35.0	40.0	M8	Steel
20195465	Male/Male	40.0	12.0	M8	Steel
20197162	Male/Male	40.0	20.0	M8	Steel
20197391	Male/Male	40.0	20.0	M10	Steel

Anti-Vibration Cylinders

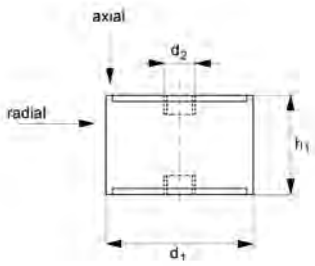

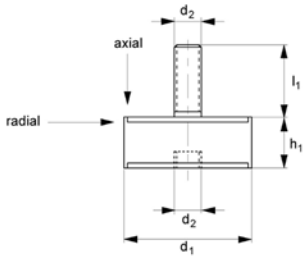

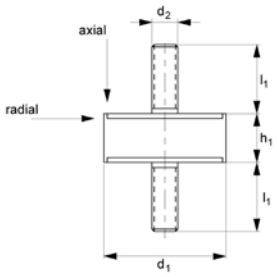



Part Number	Thread Type	d1	h1	d2	Material
20195472	Male/Male	40.0	25.0	M8	Steel
20197407	Male/Male	40.0	25.0	M10	Steel
20195489	Male/Male	40.0	28.0	M8	Steel
20197414	Male/Male	40.0	28.0	M10	Steel
20195496	Male/Male	40.0	30.0	M8	Steel
20197421	Male/Male	40.0	30.0	M10	Steel
20196981	Male/Male	40.0	35.0	M8	Steel
20197438	Male/Male	40.0	35.0	M10	Steel
20197445	Male/Male	40.0	40.0	M8	Steel
20197452	Male/Male	40.0	40.0	M10	Steel
20196998	Male/Male	40.0	45.0	M8	Steel
20197469	Male/Male	40.0	45.0	M10	Steel
20195502	Male/Male	40.0	50.0	M8	Steel
20197476	Male/Male	40.0	50.0	M10	Steel
20195519	Male/Male	45.0	30.0	M8	Steel
20195526	Male/Male	50.0	20.0	M10	Steel
20197483	Male/Male	50.0	25.0	M10	Steel
20195533	Male/Male	50.0	30.0	M10	Steel
20197001	Male/Male	50.0	35.0	M10	Steel
20195540	Male/Male	50.0	40.0	M10	Steel

Anti-Vibration Cylinders

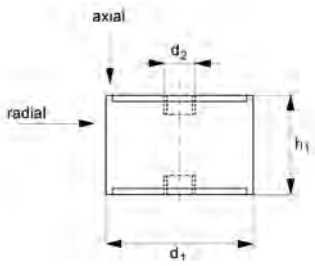

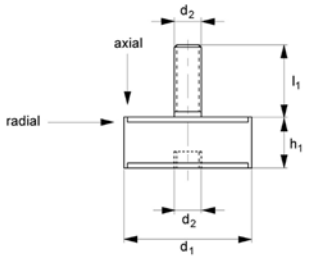

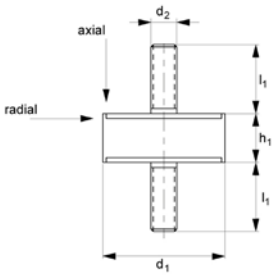



Part Number	Thread Type	d1	h1	d2	Material
20195557	Male/Male	50.0	45.0	M10	Steel
20195564	Male/Male	50.0	50.0	M10	Steel
20197490	Male/Male	50.0	55.0	M10	Steel
20195571	Male/Male	60.0	20.0	M10	Steel
20197018	Male/Male	60.0	25.0	M10	Steel
20195588	Male/Male	60.0	30.0	M10	Steel
20195595	Male/Male	60.0	35.0	M10	Steel
20195601	Male/Male	60.0	45.0	M10	Steel
20195618	Male/Male	60.0	50.0	M10	Steel
20197506	Male/Male	60.0	50.0	M12	Steel
20197025	Male/Male	60.0	60.0	M10	Steel
20197032	Male/Male	70.0	35.0	M10	Steel
20195632	Male/Male	70.0	45.0	M10	Steel
20195649	Male/Male	70.0	50.0	M10	Steel
20197049	Male/Male	70.0	70.0	M10	Steel
20195656	Male/Male	75.0	25.0	M12	Steel
20195663	Male/Male	75.0	30.0	M12	Steel
20195670	Male/Male	75.0	40.0	M12	Steel
20197131	Male/Male	75.0	45.0	M12	Steel
20195687	Male/Male	75.0	50.0	M12	Steel

Anti-Vibration Cylinders

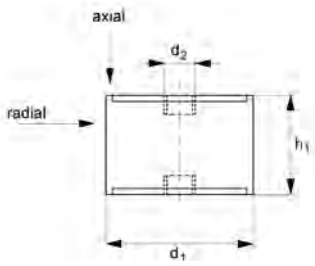

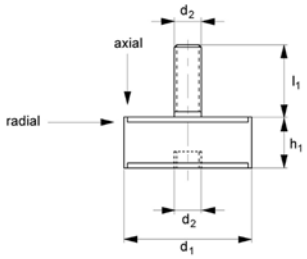

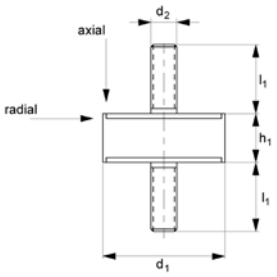



Part Number	Thread Type	d1	h1	d2	Material
20195694	Male/Male	75.0	55.0	M12	Steel
20195700	Male/Male	80.0	30.0	M14	Steel
20195717	Male/Male	80.0	40.0	M14	Steel
20195724	Male/Male	80.0	50.0	M14	Steel
20197513	Male/Male	80.0	70.0	M14	Steel
20195731	Male/Male	80.0	80.0	M14	Steel
20196813	Male/Male	95.0	40.0	M16	Steel
20196820	Male/Male	95.0	55.0	M16	Steel
20196837	Male/Male	95.0	60.0	M16	Steel
20197056	Male/Male	95.0	75.0	M16	Steel
20195120	Male/Male	100.0	40.0	M16	Steel
20195137	Male/Male	100.0	60.0	M16	Steel
20196844	Male/Male	100.0	75.0	M16	Steel
20196851	Male/Male	120.0	50.0	M16	Steel
20196868	Male/Male	120.0	75.0	M16	Steel
20196875	Male/Male	120.0	100.0	M16	Steel
20195168	Male/Male	130.0	40.0	M16	Steel
20196882	Male/Male	130.0	50.0	M16	Steel
20196899	Male/Male	130.0	75.0	M16	Steel
20196905	Male/Male	130.0	100.0	M16	Steel

Anti-Vibration Cylinders

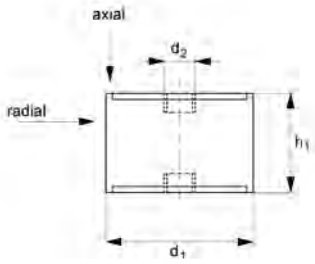

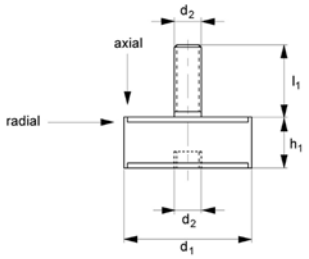

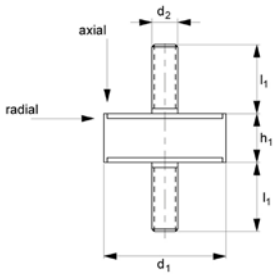



Part Number	Thread Type	d1	h1	d2	Material
20197520	Male/Male	150.0	50.0	M16	Steel
20196912	Male/Male	150.0	50.0	M20	Steel
20196929	Male/Male	150.0	60.0	M16	Steel
20197537	Male/Male	150.0	60.0	M20	Steel
20196936	Male/Male	150.0	75.0	M16	Steel
20197544	Male/Male	150.0	75.0	M20	Steel
20197551	Male/Male	150.0	100.0	M16	Steel
20196943	Male/Male	150.0	100.0	M20	Steel
20197568	Male/Male	150.0	120.0	M16	Steel
20196950	Male/Male	150.0	120.0	M20	Steel
20197575	Male/Male	150.0	140.0	M16	Steel
20196967	Male/Male	150.0	140.0	M20	Steel
20196202	Male/Female	8.0	8.0	M3	Steel
20195793	Male/Female	10.0	10.0	M4	Steel
20195809	Male/Female	12.0	31.0	M5	Steel
20197599	Male/Female	15.0	8.0	M4	Steel
20197605	Male/Female	15.0	8.0	M5	Steel
20197612	Male/Female	15.0	10.0	M4	Steel
20197629	Male/Female	15.0	10.0	M5	Steel
20197636	Male/Female	15.0	15.0	M4	Steel

Anti-Vibration Cylinders

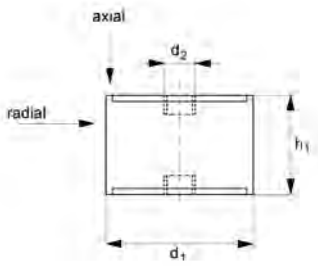

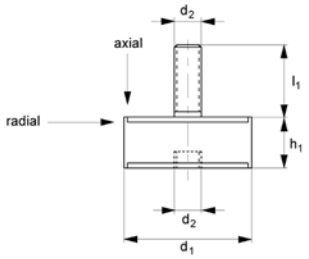

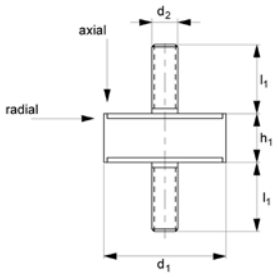



Part Number	Thread Type	d1	h1	d2	Material
20197643	Male/Female	15.0	15.0	M5	Steel
20197650	Male/Female	15.0	20.0	M4	Steel
20197667	Male/Female	15.0	20.0	M5	Steel
20195823	Male/Female	15.0	22.0	M4	Steel
20197674	Male/Female	15.0	25.0	M4	Steel
20197681	Male/Female	15.0	25.0	M5	Steel
20197698	Male/Female	20.0	10.0	M6	Steel
20195847	Male/Female	20.0	15.0	M6	Steel
20195854	Male/Female	20.0	20.0	M6	Steel
20195861	Male/Female	20.0	25.0	M6	Steel
20195878	Male/Female	20.0	30.0	M6	Steel
20195885	Male/Female	20.0	35.0	M6	Steel
20197704	Male/Female	25.0	10.0	M8	Steel
20197711	Male/Female	25.0	10.0	M8	Steel
20195892	Male/Female	25.0	15.0	M6	Steel
20197728	Male/Female	25.0	15.0	M8	Steel
20195908	Male/Female	25.0	20.0	M6	Steel
20197735	Male/Female	25.0	20.0	M8	Steel
20197742	Male/Female	25.0	22.0	M6	Steel
20197759	Male/Female	25.0	22.0	M8	Steel

Anti-Vibration Cylinders

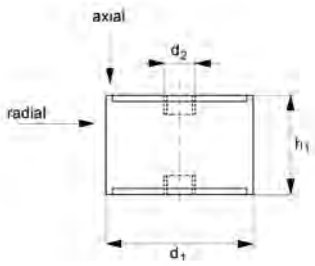

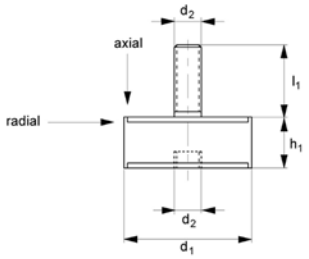

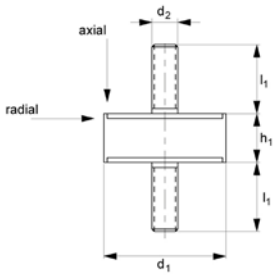



Part Number	Thread Type	d1	h1	d2	Material
20195915	Male/Female	25.0	25.0	M6	Steel
20197766	Male/Female	25.0	25.0	M8	Steel
20195922	Male/Female	25.0	30.0	M6	Steel
20197773	Male/Female	25.0	30.0	M8	Steel
20195939	Male/Female	25.0	35.0	M6	Steel
20197780	Male/Female	25.0	40.0	M6	Steel
20195946	Male/Female	30.0	15.0	M8	Steel
20195953	Male/Female	30.0	20.0	M8	Steel
20197797	Male/Female	30.0	22.0	M8	Steel
20195960	Male/Female	30.0	25.0	M8	Steel
20195977	Male/Female	30.0	30.0	M8	Steel
20197803	Male/Female	30.0	40.0	M8	Steel
20197810	Male/Female	35.0	35.0	M8	Steel
20195984	Male/Female	35.0	40.0	M8	Steel
20197827	Male/Female	40.0	20.0	M8	Steel
20197834	Male/Female	40.0	20.0	M10	Steel
20197841	Male/Female	40.0	25.0	M8	Steel
20197858	Male/Female	40.0	25.0	M10	Steel
20197865	Male/Female	40.0	28.0	M8	Steel
20197872	Male/Female	40.0	28.0	M10	Steel

Anti-Vibration Cylinders

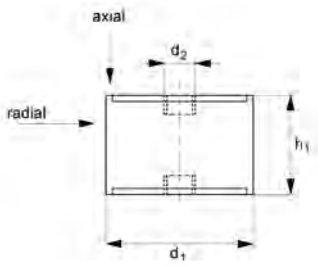

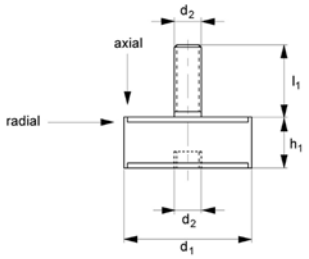

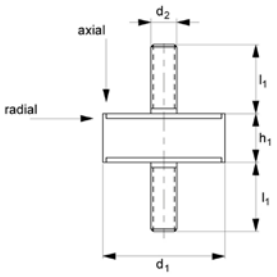



Part Number	Thread Type	d1	h1	d2	Material
20195991	Male/Female	40.0	30.0	M8	Steel
20197889	Male/Female	40.0	30.0	M10	Steel
20197896	Male/Female	40.0	35.0	M8	Steel
20197902	Male/Female	40.0	35.0	M10	Steel
20196004	Male/Female	40.0	40.0	M8	Steel
20197919	Male/Female	40.0	40.0	M10	Steel
20197926	Male/Female	40.0	45.0	M8	Steel
20197933	Male/Female	40.0	45.0	M10	Steel
20196011	Male/Female	40.0	50.0	M8	Steel
20196028	Male/Female	45.0	30.0	M8	Steel
20197124	Male/Female	50.0	20.0	M10	Steel
20196035	Male/Female	50.0	30.0	M10	Steel
20197940	Male/Female	50.0	35.0	M10	Steel
20196042	Male/Female	50.0	40.0	M10	Steel
20196059	Male/Female	50.0	45.0	M10	Steel
20196066	Male/Female	50.0	50.0	M10	Steel
20197957	Male/Female	50.0	55.0	M10	Steel
20196073	Male/Female	50.0	60.0	M10	Steel
20197964	Male/Female	60.0	25.0	M10	Steel
20196080	Male/Female	60.0	30.0	M10	Steel

Anti-Vibration Cylinders

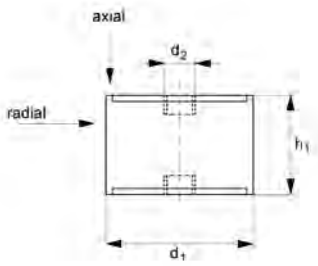

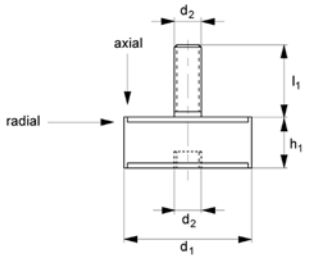

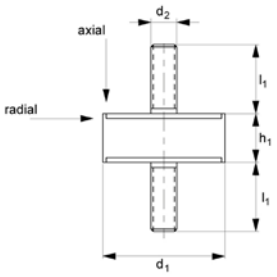



Part Number	Thread Type	d1	h1	d2	Material
20196097	Male/Female	60.0	35.0	M10	Steel
20196103	Male/Female	60.0	45.0	M10	Steel
20196110	Male/Female	60.0	50.0	M10	Steel
20197971	Male/Female	60.0	60.0	M10	Steel
20197988	Male/Female	70.0	35.0	M10	Steel
20196127	Male/Female	70.0	45.0	M10	Steel
20196134	Male/Female	70.0	50.0	M10	Steel
20196141	Male/Female	70.0	55.0	M10	Steel
20197995	Male/Female	70.0	70.0	M10	Steel
20196158	Male/Female	75.0	25.0	M12	Steel
20196165	Male/Female	75.0	30.0	M12	Steel
20196172	Male/Female	75.0	40.0	M12	Steel
20198008	Male/Female	75.0	45.0	M12	Steel
20196196	Male/Female	75.0	55.0	M12	Steel
20196608	Male/Female	80.0	30.0	M14	Steel
20196615	Male/Female	80.0	40.0	M14	Steel
20196622	Male/Female	80.0	50.0	M14	Steel
20196639	Male/Female	80.0	70.0	M14	Steel
20196646	Male/Female	95.0	40.0	M14	Steel
20196653	Male/Female	95.0	55.0	M14	Steel

Anti-Vibration Cylinders

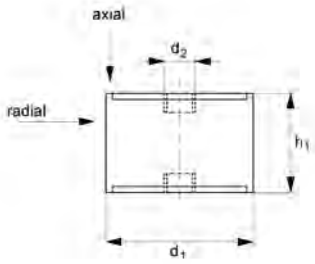

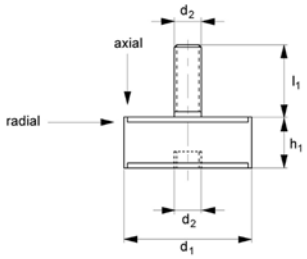

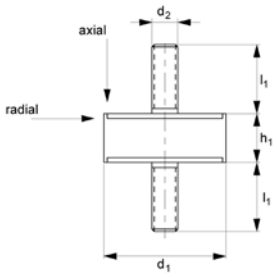



Part Number	Thread Type	d1	h1	d2	Material
20196660	Male/Female	95.0	60.0	M16	Steel
20196677	Male/Female	95.0	75.0	M16	Steel
20195762	Male/Female	100.0	40.0	M16	Steel
20195786	Male/Female	100.0	60.0	M16	Steel
20196684	Male/Female	100.0	75.0	M16	Steel
20196691	Male/Female	120.0	50.0	M16	Steel
20196707	Male/Female	120.0	75.0	M16	Steel
20196714	Male/Female	120.0	100.0	M16	Steel
20195816	Male/Female	130.0	40.0	M16	Steel
20196721	Male/Female	130.0	50.0	M16	Steel
20196738	Male/Female	130.0	75.0	M16	Steel
20196745	Male/Female	130.0	100.0	M16	Steel
20196752	Male/Female	150.0	50.0	M20	Steel
20196769	Male/Female	150.0	60.0	M20	Steel
20196776	Male/Female	150.0	75.0	M20	Steel
20196783	Male/Female	150.0	100.0	M20	Steel
20196790	Male/Female	150.0	120.0	M20	Steel
20196806	Male/Female	150.0	140.0	M20	Steel
20196271	Female/Female	15.0	15.0	M4	Steel
20196288	Female/Female	15.0	20.0	M4	Steel

Anti-Vibration Cylinders

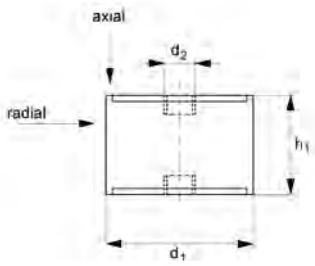

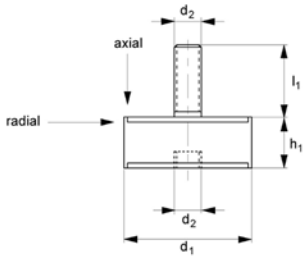

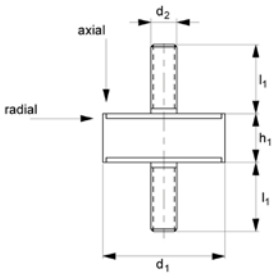



Part Number	Thread Type	d1	h1	d2	Material
20196295	Female/Female	15.0	22.0	M4	Steel
20196301	Female/Female	15.0	25.0	M4	Steel
20196318	Female/Female	15.0	28.0	M4	Steel
20196325	Female/Female	20.0	20.0	M6	Steel
20196332	Female/Female	20.0	25.0	M6	Steel
20196349	Female/Female	20.0	30.0	M6	Steel
20196356	Female/Female	20.0	35.0	M6	Steel
20196363	Female/Female	25.0	20.0	M6	Steel
20196370	Female/Female	25.0	25.0	M6	Steel
20196387	Female/Female	25.0	30.0	M6	Steel
20196394	Female/Female	25.0	35.0	M6	Steel
20196400	Female/Female	30.0	20.0	M8	Steel
20196417	Female/Female	30.0	25.0	M8	Steel
20196424	Female/Female	30.0	30.0	M8	Steel
20196431	Female/Female	35.0	40.0	M8	Steel
20196448	Female/Female	40.0	30.0	M8	Steel
20196455	Female/Female	40.0	40.0	M8	Steel
20196462	Female/Female	40.0	50.0	M8	Steel
20196479	Female/Female	50.0	30.0	M10	Steel
20196486	Female/Female	50.0	40.0	M10	Steel

Anti-Vibration Cylinders

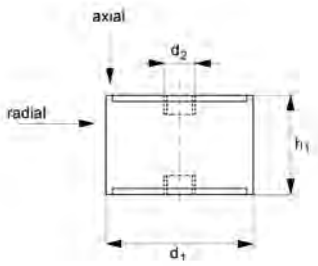

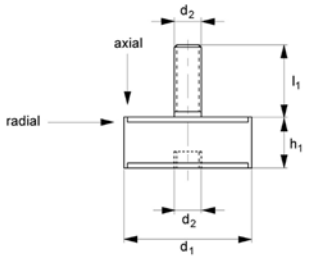

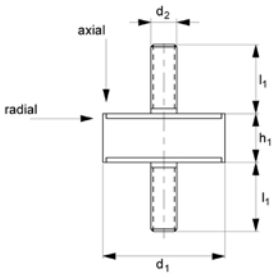



Part Number	Thread Type	d1	h1	d2	Material
20196493	Female/Female	50.0	50.0	M10	Steel
20196509	Female/Female	60.0	35.0	M10	Steel
20196516	Female/Female	60.0	45.0	M10	Steel
20196523	Female/Female	60.0	50.0	M10	Steel
20196530	Female/Female	75.0	40.0	M12	Steel
20196547	Female/Female	70.0	50.0	M10	Steel
20196554	Female/Female	70.0	55.0	M10	Steel
20196561	Female/Female	75.0	50.0	M12	Steel
20196578	Female/Female	75.0	55.0	M12	Steel
20196585	Female/Female	80.0	70.0	M14	Steel
20196226	Female/Female	100.0	40.0	M16	Steel
20196233	Female/Female	100.0	55.0	M16	Steel
20196240	Female/Female	100.0	60.0	M16	Steel
20196219	Female/Female	100.0	100.0	M16	Steel
20196257	Female/Female	130.0	40.0	M16	Steel
20196264	Female/Female	130.0	60.0	M16	Steel

Linear Guide Rails

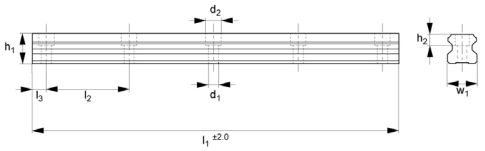

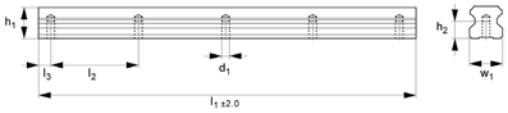



Features

- Used to guide and support moving components in a linear direction.
- Made up of two components a rail and a carriage.
- It can sustain dynamic loads while accounting for impact, vibration, and fatigue.

Specifications

Material: Steel

These Linear Guide rails are a linear motion-bearing system used to guide and support moving components in a linear direction. Linear guide rails are made up of two major components: a rail and a carriage. The rail is a long, straight beam attached to a permanent surface. The carriage is a moving block that goes along the rail. The carriage comprises bearings that make contact with the rail and offer low-friction linear motion.

These rails are used in applications requiring high accuracy, low friction and smooth movements. It can sustain dynamic loads while accounting for impact, vibration, and fatigue.

In general, the carriages will be delivered to the tracks individually. To put the carriage onto the tracks, bring it up to the rails and slide it onto the rail. It is widely utilised in high-load and accurate applications throughout the industry, including medical devices, semiconductor production equipment, and industrial automation equipment.

Linear Guide Rails

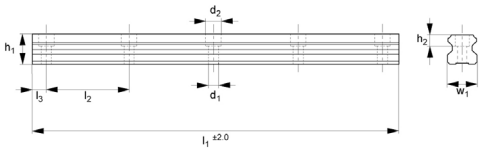

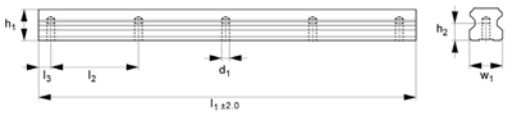



Part Number	Rail Type	Rail size	l1	h1	l2	w1	l3
20162481	Standard	15.0	220.0	13.0	60.0	15.0	20.0
20162498	Standard	15.0	280.0	13.0	60.0	15.0	20.0
20162504	Standard	15.0	340.0	13.0	60.0	15.0	20.0
20162511	Standard	15.0	400.0	13.0	60.0	15.0	20.0
20162528	Standard	15.0	460.0	13.0	60.0	15.0	20.0
20162535	Standard	15.0	520.0	13.0	60.0	15.0	20.0
20162542	Standard	15.0	580.0	13.0	60.0	15.0	20.0
20162559	Standard	15.0	640.0	13.0	60.0	15.0	20.0
20162566	Standard	15.0	700.0	13.0	60.0	15.0	20.0
20162573	Standard	15.0	760.0	13.0	60.0	15.0	20.0
20162580	Standard	15.0	820.0	13.0	60.0	15.0	20.0
20162597	Standard	15.0	880.0	13.0	60.0	15.0	20.0
20162603	Standard	15.0	940.0	13.0	60.0	15.0	20.0
20162610	Standard	15.0	1000.0	13.0	60.0	15.0	20.0
20162627	Standard	15.0	1060.0	13.0	60.0	15.0	20.0
20165970	Standard	15.0	1120.0	13.0	60.0	15.0	20.0
20162634	Standard	15.0	1180.0	13.0	60.0	15.0	20.0
20162641	Standard	15.0	1240.0	13.0	60.0	15.0	20.0
20162658	Standard	15.0	1300.0	13.0	60.0	15.0	20.0
20162665	Standard	15.0	1360.0	13.0	60.0	15.0	20.0
20162672	Standard	15.0	1420.0	13.0	60.0	15.0	20.0
20162689	Standard	15.0	1480.0	13.0	60.0	15.0	20.0
20162696	Standard	15.0	1540.0	13.0	60.0	15.0	20.0
20162702	Standard	15.0	1600.0	13.0	60.0	15.0	20.0
20162719	Standard	15.0	1660.0	13.0	60.0	15.0	20.0
20162726	Standard	15.0	1720.0	13.0	60.0	15.0	20.0

Linear Guide Rails

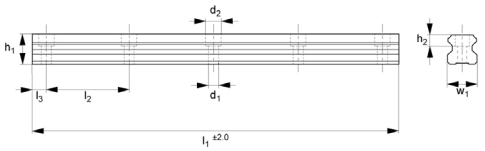

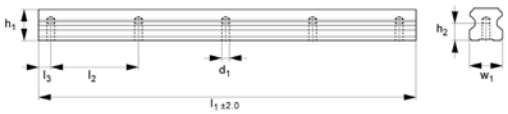



Part Number	Rail Type	Rail size	l1	h1	l2	w1	l3
20162733	Standard	15.0	1780.0	13.0	60.0	15.0	20.0
20162740	Standard	15.0	1840.0	13.0	60.0	15.0	20.0
20162757	Standard	15.0	1900.0	13.0	60.0	15.0	20.0
20162764	Standard	15.0	1960.0	13.0	60.0	15.0	20.0
20162771	Standard	15.0	2020.0	13.0	60.0	15.0	20.0
20162788	Standard	15.0	2080.0	13.0	60.0	15.0	20.0
20162795	Standard	15.0	2140.0	13.0	60.0	15.0	20.0
20162801	Standard	15.0	2220.0	13.0	60.0	15.0	20.0
20162818	Standard	15.0	2260.0	13.0	60.0	15.0	20.0
20162825	Standard	15.0	2320.0	13.0	60.0	15.0	20.0
20162832	Standard	15.0	2380.0	13.0	60.0	15.0	20.0
20162849	Standard	15.0	2440.0	13.0	60.0	15.0	20.0
20162856	Standard	15.0	2500.0	13.0	60.0	15.0	20.0
20162863	Standard	15.0	2560.0	13.0	60.0	15.0	20.0
20162870	Standard	15.0	2620.0	13.0	60.0	15.0	20.0
20162887	Standard	15.0	2680.0	13.0	60.0	15.0	20.0
20162894	Standard	15.0	2740.0	13.0	60.0	15.0	20.0
20162900	Standard	15.0	2800.0	13.0	60.0	15.0	20.0
20162917	Standard	15.0	2860.0	13.0	60.0	15.0	20.0
20162924	Standard	15.0	2920.0	13.0	60.0	15.0	20.0
20162931	Standard	15.0	2980.0	13.0	60.0	15.0	20.0
20162948	Standard	15.0	3040.0	13.0	60.0	15.0	20.0
20162955	Standard	15.0	3100.0	13.0	60.0	15.0	20.0
20162962	Standard	15.0	3160.0	13.0	60.0	15.0	20.0
20162979	Standard	15.0	3220.0	13.0	60.0	15.0	20.0
20162986	Standard	15.0	3280.0	13.0	60.0	15.0	20.0

Linear Guide Rails

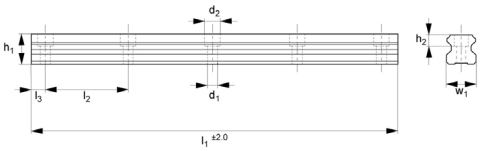

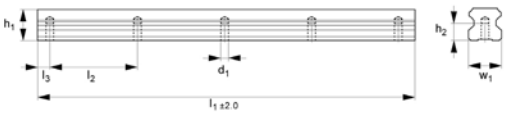



Part Number	Rail Type	Rail size	l1	h1	l2	w1	l3
20162993	Standard	15.0	3340.0	13.0	60.0	15.0	20.0
20163006	Standard	15.0	3400.0	13.0	60.0	15.0	20.0
20165987	Standard	15.0	3460.0	13.0	60.0	15.0	20.0
20163013	Standard	15.0	3520.0	13.0	60.0	15.0	20.0
20163020	Standard	15.0	3580.0	13.0	60.0	15.0	20.0
20163037	Standard	15.0	3640.0	13.0	60.0	15.0	20.0
20163044	Standard	15.0	3700.0	13.0	60.0	15.0	20.0
20163051	Standard	15.0	3760.0	13.0	60.0	15.0	20.0
20163068	Standard	15.0	3820.0	13.0	60.0	15.0	20.0
20163075	Standard	15.0	3880.0	13.0	60.0	15.0	20.0
20163082	Standard	15.0	3940.0	13.0	60.0	15.0	20.0
20163099	Standard	15.0	4000.0	13.0	60.0	15.0	20.0
20163105	Standard	20.0	160.0	16.3	60.0	20.0	20.0
20163112	Standard	20.0	220.0	16.3	60.0	20.0	20.0
20163129	Standard	20.0	280.0	16.3	60.0	20.0	20.0
20163136	Standard	20.0	340.0	16.3	60.0	20.0	20.0
20163143	Standard	20.0	400.0	16.3	60.0	20.0	20.0
20163150	Standard	20.0	460.0	16.3	60.0	20.0	20.0
20163167	Standard	20.0	520.0	16.3	60.0	20.0	20.0
20163174	Standard	20.0	580.0	16.3	60.0	20.0	20.0
20163181	Standard	20.0	640.0	16.3	60.0	20.0	20.0
20163198	Standard	20.0	700.0	16.3	60.0	20.0	20.0
20163204	Standard	20.0	760.0	16.3	60.0	20.0	20.0
20163211	Standard	20.0	820.0	16.3	60.0	20.0	20.0
20163228	Standard	20.0	880.0	16.3	60.0	20.0	20.0
20163235	Standard	20.0	940.0	16.3	60.0	20.0	20.0

Linear Guide Rails

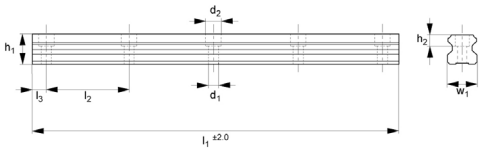

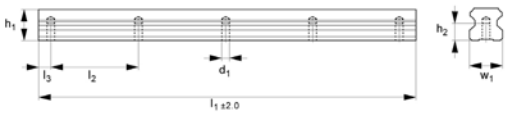



Part Number	Rail Type	Rail size	l1	h1	l2	w1	l3
20163242	Standard	20.0	1000.0	16.3	60.0	20.0	20.0
20163259	Standard	20.0	1060.0	16.3	60.0	20.0	20.0
20163266	Standard	20.0	1120.0	16.3	60.0	20.0	20.0
20163273	Standard	20.0	1180.0	16.3	60.0	20.0	20.0
20163280	Standard	20.0	1240.0	16.3	60.0	20.0	20.0
20163297	Standard	20.0	1300.0	16.3	60.0	20.0	20.0
20163303	Standard	20.0	1360.0	16.3	60.0	20.0	20.0
20163310	Standard	20.0	1420.0	16.3	60.0	20.0	20.0
20163327	Standard	20.0	1480.0	16.3	60.0	20.0	20.0
20163334	Standard	20.0	1540.0	16.3	60.0	20.0	20.0
20163341	Standard	20.0	1600.0	16.3	60.0	20.0	20.0
20163358	Standard	20.0	1660.0	16.3	60.0	20.0	20.0
20163365	Standard	20.0	1720.0	16.3	60.0	20.0	20.0
20163372	Standard	20.0	1780.0	16.3	60.0	20.0	20.0
20163389	Standard	20.0	1840.0	16.3	60.0	20.0	20.0
20163396	Standard	20.0	1900.0	16.3	60.0	20.0	20.0
20163402	Standard	20.0	1960.0	16.3	60.0	20.0	20.0
20163419	Standard	20.0	2020.0	16.3	60.0	20.0	20.0
20163426	Standard	20.0	2080.0	16.3	60.0	20.0	20.0
20163433	Standard	20.0	2140.0	16.3	60.0	20.0	20.0
20163440	Standard	20.0	2200.0	16.3	60.0	20.0	20.0
20163457	Standard	20.0	2260.0	16.3	60.0	20.0	20.0
20163464	Standard	20.0	2320.0	16.3	60.0	20.0	20.0
20163471	Standard	20.0	2380.0	16.3	60.0	20.0	20.0
20163488	Standard	20.0	2440.0	16.3	60.0	20.0	20.0
20163495	Standard	20.0	2500.0	16.3	60.0	20.0	20.0

Linear Guide Rails

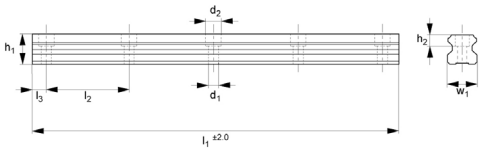

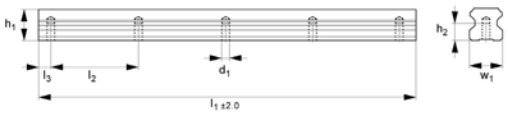



Part Number	Rail Type	Rail size	l1	h1	l2	w1	l3
20163501	Standard	20.0	2560.0	16.3	60.0	20.0	20.0
20163518	Standard	20.0	2620.0	16.3	60.0	20.0	20.0
20163525	Standard	20.0	2680.0	16.3	60.0	20.0	20.0
20163532	Standard	20.0	2740.0	16.3	60.0	20.0	20.0
20163549	Standard	20.0	2800.0	16.3	60.0	20.0	20.0
20163556	Standard	20.0	2860.0	16.3	60.0	20.0	20.0
20163563	Standard	20.0	2920.0	16.3	60.0	20.0	20.0
20163570	Standard	20.0	2980.0	16.3	60.0	20.0	20.0
20163587	Standard	20.0	3040.0	16.3	60.0	20.0	20.0
20163594	Standard	20.0	3100.0	16.3	60.0	20.0	20.0
20163600	Standard	20.0	3160.0	16.3	60.0	20.0	20.0
20163617	Standard	20.0	3220.0	16.3	60.0	20.0	20.0
20163624	Standard	20.0	3280.0	16.3	60.0	20.0	20.0
20163631	Standard	20.0	3340.0	16.3	60.0	20.0	20.0
20163648	Standard	20.0	3400.0	16.3	60.0	20.0	20.0
20163655	Standard	20.0	3460.0	16.3	60.0	20.0	20.0
20163662	Standard	20.0	3520.0	16.3	60.0	20.0	20.0
20163679	Standard	20.0	3580.0	16.3	60.0	20.0	20.0
20163686	Standard	20.0	3640.0	16.3	60.0	20.0	20.0
20163693	Standard	20.0	3700.0	16.3	60.0	20.0	20.0
20163709	Standard	20.0	3760.0	16.3	60.0	20.0	20.0
20163716	Standard	20.0	3820.0	16.3	60.0	20.0	20.0
20163723	Standard	20.0	3880.0	16.3	60.0	20.0	20.0
20163730	Standard	20.0	3940.0	16.3	60.0	20.0	20.0
20163747	Standard	20.0	4000.0	16.3	60.0	20.0	20.0
20163754	Standard	25.0	160.0	19.2	60.0	23.0	20.0

Linear Guide Rails

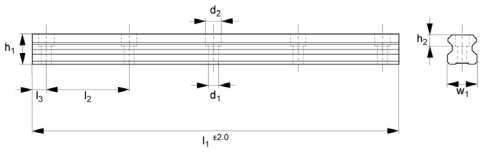

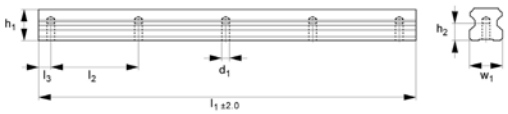



Part Number	Rail Type	Rail size	l1	h1	l2	w1	l3
20163761	Standard	25.0	220.0	19.2	60.0	23.0	20.0
20163778	Standard	25.0	280.0	19.2	60.0	23.0	20.0
20163785	Standard	25.0	340.0	19.2	60.0	23.0	20.0
20163792	Standard	25.0	400.0	19.2	60.0	23.0	20.0
20163808	Standard	25.0	460.0	19.2	60.0	23.0	20.0
20163815	Standard	25.0	520.0	19.2	60.0	23.0	20.0
20163822	Standard	25.0	580.0	19.2	60.0	23.0	20.0
20163839	Standard	25.0	640.0	19.2	60.0	23.0	20.0
20163846	Standard	25.0	700.0	19.2	60.0	23.0	20.0
20163853	Standard	25.0	760.0	19.2	60.0	23.0	20.0
20163860	Standard	25.0	820.0	19.2	60.0	23.0	20.0
20163877	Standard	25.0	880.0	19.2	60.0	23.0	20.0
20163884	Standard	25.0	940.0	19.2	60.0	23.0	20.0
20163891	Standard	25.0	1000.0	19.2	60.0	23.0	20.0
20163907	Standard	25.0	1060.0	19.2	60.0	23.0	20.0
20165994	Standard	25.0	1120.0	19.2	60.0	23.0	20.0
20163914	Standard	25.0	1180.0	19.2	60.0	23.0	20.0
20163921	Standard	25.0	1240.0	19.2	60.0	23.0	20.0
20163938	Standard	25.0	1300.0	19.2	60.0	23.0	20.0
20163945	Standard	25.0	1360.0	19.2	60.0	23.0	20.0
20163952	Standard	25.0	1420.0	19.2	60.0	23.0	20.0
20163969	Standard	25.0	1480.0	19.2	60.0	23.0	20.0
20163976	Standard	25.0	1540.0	19.2	60.0	23.0	20.0
20163983	Standard	25.0	1600.0	19.2	60.0	23.0	20.0
20163990	Standard	25.0	1660.0	19.2	60.0	23.0	20.0
20164003	Standard	25.0	1720.0	19.2	60.0	23.0	20.0

Linear Guide Rails

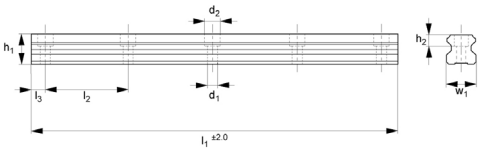

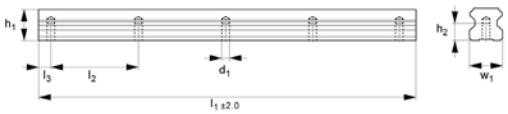



Part Number	Rail Type	Rail size	l1	h1	l2	w1	l3
20164010	Standard	25.0	1780.0	19.2	60.0	23.0	20.0
20164027	Standard	25.0	1840.0	19.2	60.0	23.0	20.0
20164034	Standard	25.0	1900.0	19.2	60.0	23.0	20.0
20164041	Standard	25.0	1960.0	19.2	60.0	23.0	20.0
20166007	Standard	25.0	2020.0	19.2	60.0	23.0	20.0
20164058	Standard	25.0	2080.0	19.2	60.0	23.0	20.0
20164065	Standard	25.0	2140.0	19.2	60.0	23.0	20.0
20164072	Standard	25.0	2200.0	19.2	60.0	23.0	20.0
20164089	Standard	25.0	2260.0	19.2	60.0	23.0	20.0
20164096	Standard	25.0	2320.0	19.2	60.0	23.0	20.0
20164102	Standard	25.0	2380.0	19.2	60.0	23.0	20.0
20164119	Standard	25.0	2440.0	19.2	60.0	23.0	20.0
20164126	Standard	25.0	2500.0	19.2	60.0	23.0	20.0
20164133	Standard	25.0	2560.0	19.2	60.0	23.0	20.0
20164140	Standard	25.0	2620.0	19.2	60.0	23.0	20.0
20164157	Standard	25.0	2680.0	19.2	60.0	23.0	20.0
20164164	Standard	25.0	2740.0	19.2	60.0	23.0	20.0
20164171	Standard	25.0	2800.0	19.2	60.0	23.0	20.0
20164188	Standard	25.0	2860.0	19.2	60.0	23.0	20.0
20164195	Standard	25.0	2920.0	19.2	60.0	23.0	20.0
20164201	Standard	25.0	2980.0	19.2	60.0	23.0	20.0
20164218	Standard	25.0	3040.0	19.2	60.0	23.0	20.0
20164225	Standard	25.0	3100.0	19.2	60.0	23.0	20.0
20164232	Standard	25.0	3160.0	19.2	60.0	23.0	20.0
20164249	Standard	25.0	3220.0	19.2	60.0	23.0	20.0
20164256	Standard	25.0	3280.0	19.2	60.0	23.0	20.0

Linear Guide Rails

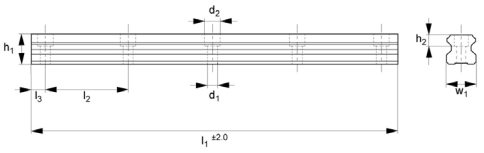

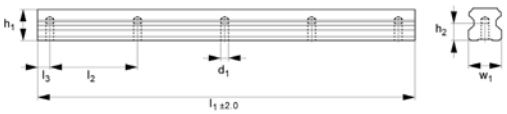



Part Number	Rail Type	Rail size	l1	h1	l2	w1	l3
20164263	Standard	25.0	3340.0	19.2	60.0	23.0	20.0
20164270	Standard	25.0	3400.0	19.2	60.0	23.0	20.0
20166014	Standard	25.0	3460.0	19.2	60.0	23.0	20.0
20164287	Standard	25.0	3520.0	19.2	60.0	23.0	20.0
20164294	Standard	25.0	3580.0	19.2	60.0	23.0	20.0
20164300	Standard	25.0	3640.0	19.2	60.0	23.0	20.0
20164317	Standard	25.0	3700.0	19.2	60.0	23.0	20.0
20164324	Standard	25.0	3760.0	19.2	60.0	23.0	20.0
20164331	Standard	25.0	3820.0	19.2	60.0	23.0	20.0
20164348	Standard	25.0	3880.0	19.2	60.0	23.0	20.0
20164355	Standard	25.0	3940.0	19.2	60.0	23.0	20.0
20159221	Standard	25.0	4000.0	19.2	60.0	23.0	20.0
20164362	Standard	30.0	200.0	22.8	80.0	28.0	20.0
20164379	Standard	30.0	280.0	22.8	80.0	28.0	20.0
20164386	Standard	30.0	360.0	22.8	80.0	28.0	20.0
20164393	Standard	30.0	440.0	22.8	80.0	28.0	20.0
20164409	Standard	30.0	520.0	22.8	80.0	28.0	20.0
20162474	Standard	30.0	600.0	22.8	80.0	28.0	20.0
20164416	Standard	30.0	680.0	22.8	80.0	28.0	20.0
20164423	Standard	30.0	760.0	22.8	80.0	28.0	20.0
20164430	Standard	30.0	840.0	22.8	80.0	28.0	20.0
20164447	Standard	30.0	920.0	22.8	80.0	28.0	20.0
20164454	Standard	30.0	1000.0	22.8	80.0	28.0	20.0
20164461	Standard	30.0	1080.0	22.8	80.0	28.0	20.0
20164478	Standard	30.0	1160.0	22.8	80.0	28.0	20.0
20164485	Standard	30.0	1240.0	22.8	80.0	28.0	20.0

Linear Guide Rails

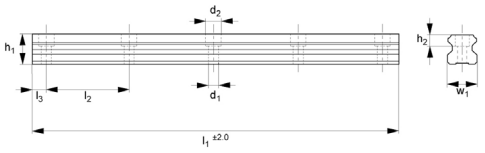

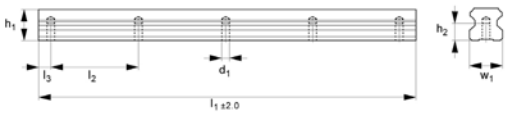



Part Number	Rail Type	Rail size	l1	h1	l2	w1	l3
20164492	Standard	30.0	1320.0	22.8	80.0	28.0	20.0
20164508	Standard	30.0	1400.0	22.8	80.0	28.0	20.0
20164515	Standard	30.0	1480.0	22.8	80.0	28.0	20.0
20164522	Standard	30.0	1560.0	22.8	80.0	28.0	20.0
20164539	Standard	30.0	1640.0	22.8	80.0	28.0	20.0
20164546	Standard	30.0	1720.0	22.8	80.0	28.0	20.0
20164553	Standard	30.0	1800.0	22.8	80.0	28.0	20.0
20164560	Standard	30.0	1880.0	22.8	80.0	28.0	20.0
20164577	Standard	30.0	1960.0	22.8	80.0	28.0	20.0
20164584	Standard	30.0	2040.0	22.8	80.0	28.0	20.0
20164591	Standard	30.0	2120.0	22.8	80.0	28.0	20.0
20164607	Standard	30.0	2200.0	22.8	80.0	28.0	20.0
20164614	Standard	30.0	2280.0	22.8	80.0	28.0	20.0
20164621	Standard	30.0	2360.0	22.8	80.0	28.0	20.0
20164638	Standard	30.0	2440.0	22.8	80.0	28.0	20.0
20164645	Standard	30.0	2520.0	22.8	80.0	28.0	20.0
20164652	Standard	30.0	2600.0	22.8	80.0	28.0	20.0
20164669	Standard	30.0	2680.0	22.8	80.0	28.0	20.0
20164676	Standard	30.0	2760.0	22.8	80.0	28.0	20.0
20164683	Standard	30.0	2840.0	22.8	80.0	28.0	20.0
20164690	Standard	30.0	2920.0	22.8	80.0	28.0	20.0
20164706	Standard	30.0	3000.0	22.8	80.0	28.0	20.0
20164713	Standard	30.0	3080.0	22.8	80.0	28.0	20.0
20164720	Standard	30.0	3160.0	22.8	80.0	28.0	20.0
20164737	Standard	30.0	3240.0	22.8	80.0	28.0	20.0
20164744	Standard	30.0	3320.0	22.8	80.0	28.0	20.0

Linear Guide Rails

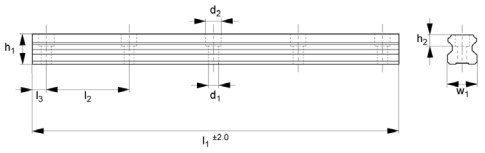

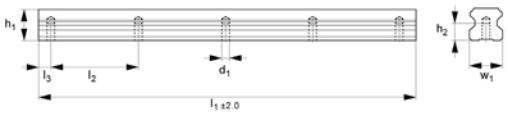



Part Number	Rail Type	Rail size	l1	h1	l2	w1	l3
20164751	Standard	30.0	3400.0	22.8	80.0	28.0	20.0
20164768	Standard	30.0	3480.0	22.8	80.0	28.0	20.0
20164775	Standard	30.0	3560.0	22.8	80.0	28.0	20.0
20164782	Standard	30.0	3640.0	22.8	80.0	28.0	20.0
20164799	Standard	30.0	3720.0	22.8	80.0	28.0	20.0
20164805	Standard	30.0	3800.0	22.8	80.0	28.0	20.0
20164812	Standard	30.0	3880.0	22.8	80.0	28.0	20.0
20164829	Standard	30.0	3960.0	22.8	80.0	28.0	20.0
20159207	Standard	30.0	4000.0	22.8	80.0	28.0	20.0
20164836	Standard	35.0	200.0	26.0	80.0	34.0	20.0
20164843	Standard	35.0	280.0	26.0	80.0	34.0	20.0
20164850	Standard	35.0	360.0	26.0	80.0	34.0	20.0
20164867	Standard	35.0	440.0	26.0	80.0	34.0	20.0
20164874	Standard	35.0	520.0	26.0	80.0	34.0	20.0
20164881	Standard	35.0	600.0	26.0	80.0	34.0	20.0
20164898	Standard	35.0	680.0	26.0	80.0	34.0	20.0
20164904	Standard	35.0	760.0	26.0	80.0	34.0	20.0
20164911	Standard	35.0	840.0	26.0	80.0	34.0	20.0
20164928	Standard	35.0	920.0	26.0	80.0	34.0	20.0
20164935	Standard	35.0	1000.0	26.0	80.0	34.0	20.0
20164942	Standard	35.0	1080.0	26.0	80.0	34.0	20.0
20164959	Standard	35.0	1160.0	26.0	80.0	34.0	20.0
20164966	Standard	35.0	1240.0	26.0	80.0	34.0	20.0
20164973	Standard	35.0	1320.0	26.0	80.0	34.0	20.0
20164980	Standard	35.0	1400.0	26.0	80.0	34.0	20.0
20164997	Standard	35.0	1480.0	26.0	80.0	34.0	20.0

Linear Guide Rails

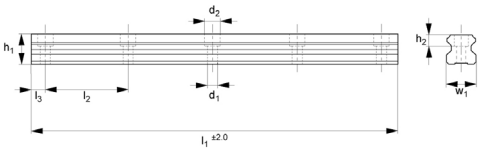

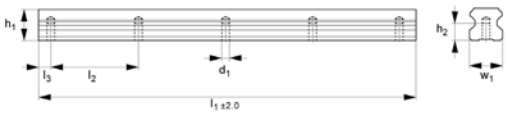



Part Number	Rail Type	Rail size	l1	h1	l2	w1	l3
20165000	Standard	35.0	1560.0	26.0	80.0	34.0	20.0
20165017	Standard	35.0	1640.0	26.0	80.0	34.0	20.0
20165024	Standard	35.0	1720.0	26.0	80.0	34.0	20.0
20165031	Standard	35.0	1800.0	26.0	80.0	34.0	20.0
20165048	Standard	35.0	1880.0	26.0	80.0	34.0	20.0
20165055	Standard	35.0	1960.0	26.0	80.0	34.0	20.0
20165062	Standard	35.0	2040.0	26.0	80.0	34.0	20.0
20165079	Standard	35.0	2120.0	26.0	80.0	34.0	20.0
20165086	Standard	35.0	2200.0	26.0	80.0	34.0	20.0
20165093	Standard	35.0	2280.0	26.0	80.0	34.0	20.0
20165109	Standard	35.0	2360.0	26.0	80.0	34.0	20.0
20165116	Standard	35.0	2440.0	26.0	80.0	34.0	20.0
20165123	Standard	35.0	2520.0	26.0	80.0	34.0	20.0
20165130	Standard	35.0	2600.0	26.0	80.0	34.0	20.0
20165147	Standard	35.0	2680.0	26.0	80.0	34.0	20.0
20165154	Standard	35.0	2760.0	26.0	80.0	34.0	20.0
20165161	Standard	35.0	2840.0	26.0	80.0	34.0	20.0
20165178	Standard	35.0	2920.0	26.0	80.0	34.0	20.0
20165185	Standard	35.0	3000.0	26.0	80.0	34.0	20.0
20165192	Standard	35.0	3080.0	26.0	80.0	34.0	20.0
20165208	Standard	35.0	3160.0	26.0	80.0	34.0	20.0
20165215	Standard	35.0	3240.0	26.0	80.0	34.0	20.0
20165222	Standard	35.0	3320.0	26.0	80.0	34.0	20.0
20165239	Standard	35.0	3400.0	26.0	80.0	34.0	20.0
20165246	Standard	35.0	3480.0	26.0	80.0	34.0	20.0
20165253	Standard	35.0	3560.0	26.0	80.0	34.0	20.0

Linear Guide Rails

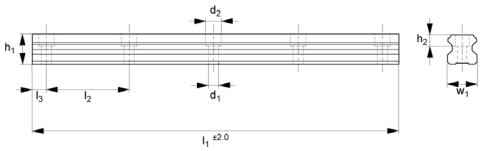

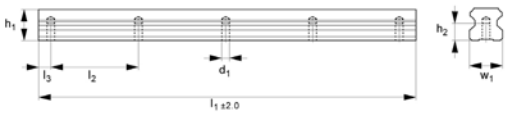



Part Number	Rail Type	Rail size	l1	h1	l2	w1	l3
20165260	Standard	35.0	3640.0	26.0	80.0	34.0	20.0
20165277	Standard	35.0	3720.0	26.0	80.0	34.0	20.0
20165284	Standard	35.0	3800.0	26.0	80.0	34.0	20.0
20165291	Standard	35.0	3880.0	26.0	80.0	34.0	20.0
20165307	Standard	35.0	3960.0	26.0	80.0	34.0	20.0
20159214	Standard	35.0	4000.0	26.0	80.0	34.0	20.0
20165314	Standard	45.0	255.0	31.1	105.0	45.0	22.5
20165321	Standard	45.0	360.0	31.1	105.0	45.0	22.5
20165338	Standard	45.0	465.0	31.1	105.0	45.0	22.5
20165345	Standard	45.0	570.0	31.1	105.0	45.0	22.5
20165352	Standard	45.0	675.0	31.1	105.0	45.0	22.5
20165369	Standard	45.0	780.0	31.1	105.0	45.0	22.5
20165376	Standard	45.0	885.0	31.1	105.0	45.0	22.5
20165383	Standard	45.0	990.0	31.1	105.0	45.0	22.5
20165390	Standard	45.0	1095.0	31.1	105.0	45.0	22.5
20165406	Standard	45.0	1200.0	31.1	105.0	45.0	22.5
20165413	Standard	45.0	1305.0	31.1	105.0	45.0	22.5
20165420	Standard	45.0	1410.0	31.1	105.0	45.0	22.5
20165437	Standard	45.0	1515.0	31.1	105.0	45.0	22.5
20165444	Standard	45.0	1620.0	31.1	105.0	45.0	22.5
20165451	Standard	45.0	1725.0	31.1	105.0	45.0	22.5
20165468	Standard	45.0	1830.0	31.1	105.0	45.0	22.5
20165475	Standard	45.0	1935.0	31.1	105.0	45.0	22.5
20165482	Standard	45.0	2040.0	31.1	105.0	45.0	22.5
20165499	Standard	45.0	2145.0	31.1	105.0	45.0	22.5
20165505	Standard	45.0	2250.0	31.1	105.0	45.0	22.5

Linear Guide Rails

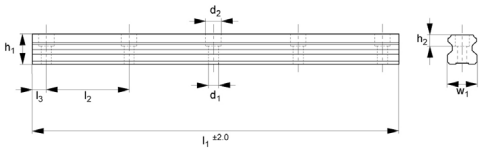

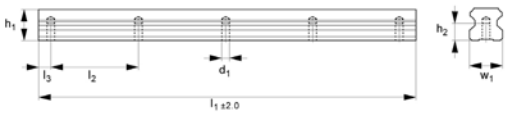



Part Number	Rail Type	Rail size	l1	h1	l2	w1	l3
20165512	Standard	45.0	2355.0	31.1	105.0	45.0	22.5
20165529	Standard	45.0	2460.0	31.1	105.0	45.0	22.5
20165536	Standard	45.0	2565.0	31.1	105.0	45.0	22.5
20165543	Standard	45.0	2670.0	31.1	105.0	45.0	22.5
20165550	Standard	45.0	2775.0	31.1	105.0	45.0	22.5
20165567	Standard	45.0	2880.0	31.1	105.0	45.0	22.5
20165574	Standard	45.0	2985.0	31.1	105.0	45.0	22.5
20165581	Standard	45.0	3090.0	31.1	105.0	45.0	22.5
20165598	Standard	45.0	3195.0	31.1	105.0	45.0	22.5
20165604	Standard	45.0	3300.0	31.1	105.0	45.0	22.5
20165611	Standard	45.0	3405.0	31.1	105.0	45.0	22.5
20165628	Standard	45.0	3510.0	31.1	105.0	45.0	22.5
20165635	Standard	45.0	3615.0	31.1	105.0	45.0	22.5
20165642	Standard	45.0	3720.0	31.1	105.0	45.0	22.5
20165659	Standard	45.0	3825.0	31.1	105.0	45.0	22.5
20159238	Standard	45.0	3930.0	31.1	105.0	45.0	22.5
20165666	Standard	55.0	300.0	38.0	120.0	53.0	30.0
20165673	Standard	55.0	420.0	38.0	120.0	53.0	30.0
20165680	Standard	55.0	540.0	38.0	120.0	53.0	30.0
20165697	Standard	55.0	660.0	38.0	120.0	53.0	30.0
20165703	Standard	55.0	780.0	38.0	120.0	53.0	30.0
20165710	Standard	55.0	900.0	38.0	120.0	53.0	30.0
20165727	Standard	55.0	1020.0	38.0	120.0	53.0	30.0
20165734	Standard	55.0	1140.0	38.0	120.0	53.0	30.0
20165741	Standard	55.0	1260.0	38.0	120.0	53.0	30.0
20165758	Standard	55.0	1380.0	38.0	120.0	53.0	30.0

Linear Guide Rails

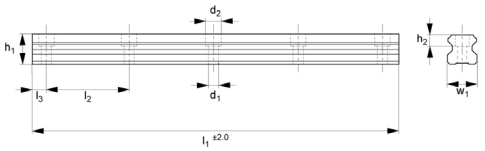

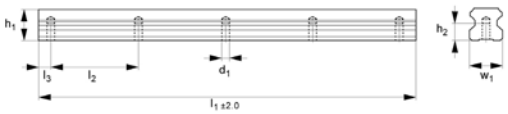



Part Number	Rail Type	Rail size	l1	h1	l2	w1	l3
20165765	Standard	55.0	1500.0	38.0	120.0	53.0	30.0
20165772	Standard	55.0	1620.0	38.0	120.0	53.0	30.0
20165789	Standard	55.0	1740.0	38.0	120.0	53.0	30.0
20165796	Standard	55.0	1860.0	38.0	120.0	53.0	30.0
20165802	Standard	55.0	1980.0	38.0	120.0	53.0	30.0
20165819	Standard	55.0	2100.0	38.0	120.0	53.0	30.0
20165826	Standard	55.0	2220.0	38.0	120.0	53.0	30.0
20165833	Standard	55.0	2340.0	38.0	120.0	53.0	30.0
20165840	Standard	55.0	2460.0	38.0	120.0	53.0	30.0
20165857	Standard	55.0	2580.0	38.0	120.0	53.0	30.0
20165864	Standard	55.0	2700.0	38.0	120.0	53.0	30.0
20165871	Standard	55.0	2820.0	38.0	120.0	53.0	30.0
20165888	Standard	55.0	2940.0	38.0	120.0	53.0	30.0
20165895	Standard	55.0	3060.0	38.0	120.0	53.0	30.0
20165901	Standard	55.0	3180.0	38.0	120.0	53.0	30.0
20165918	Standard	55.0	3300.0	38.0	120.0	53.0	30.0
20165925	Standard	55.0	3420.0	38.0	120.0	53.0	30.0
20165932	Standard	55.0	3540.0	38.0	120.0	53.0	30.0
20165949	Standard	55.0	3660.0	38.0	120.0	53.0	30.0
20165956	Standard	55.0	3780.0	38.0	120.0	53.0	30.0
20165963	Standard	55.0	3900.0	38.0	120.0	53.0	30.0
20174002	Standard	55.0	4000.0	38.0	120.0	53.0	30.0
20166021	Rear Fixing	15.0	160.0	13.0	60.0	15.0	20.0
20166038	Rear Fixing	15.0	220.0	13.0	60.0	15.0	20.0
20166045	Rear Fixing	15.0	280.0	13.0	60.0	15.0	20.0
20166052	Rear Fixing	15.0	340.0	13.0	60.0	15.0	20.0

Linear Guide Rails

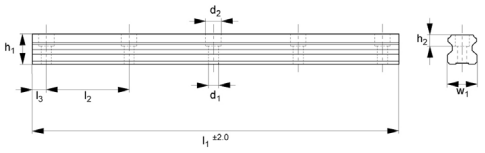

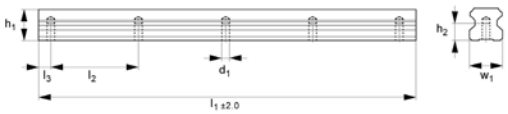



Part Number	Rail Type	Rail size	l1	h1	l2	w1	l3
20166069	Rear Fixing	15.0	400.0	13.0	60.0	15.0	20.0
20166076	Rear Fixing	15.0	460.0	13.0	60.0	15.0	20.0
20166083	Rear Fixing	15.0	520.0	13.0	60.0	15.0	20.0
20166090	Rear Fixing	15.0	580.0	13.0	60.0	15.0	20.0
20166106	Rear Fixing	15.0	640.0	13.0	60.0	15.0	20.0
20166113	Rear Fixing	15.0	700.0	13.0	60.0	15.0	20.0
20166120	Rear Fixing	15.0	760.0	13.0	60.0	15.0	20.0
20166137	Rear Fixing	15.0	820.0	13.0	60.0	15.0	20.0
20166144	Rear Fixing	15.0	880.0	13.0	60.0	15.0	20.0
20166151	Rear Fixing	15.0	940.0	13.0	60.0	15.0	20.0
20166168	Rear Fixing	15.0	1000.0	13.0	60.0	15.0	20.0
20166175	Rear Fixing	15.0	1060.0	13.0	60.0	15.0	20.0
20166182	Rear Fixing	15.0	1120.0	13.0	60.0	15.0	20.0
20166199	Rear Fixing	15.0	1180.0	13.0	60.0	15.0	20.0
20166205	Rear Fixing	15.0	1240.0	13.0	60.0	15.0	20.0
20166212	Rear Fixing	15.0	1300.0	13.0	60.0	15.0	20.0
20166229	Rear Fixing	15.0	1360.0	13.0	60.0	15.0	20.0
20166236	Rear Fixing	15.0	1420.0	13.0	60.0	15.0	20.0
20166243	Rear Fixing	15.0	1480.0	13.0	60.0	15.0	20.0
20166250	Rear Fixing	15.0	1540.0	13.0	60.0	15.0	20.0
20166267	Rear Fixing	15.0	1600.0	13.0	60.0	15.0	20.0
20166274	Rear Fixing	15.0	1660.0	13.0	60.0	15.0	20.0
20166281	Rear Fixing	15.0	1720.0	13.0	60.0	15.0	20.0
20166298	Rear Fixing	15.0	1780.0	13.0	60.0	15.0	20.0
20166304	Rear Fixing	15.0	1840.0	13.0	60.0	15.0	20.0
20166311	Rear Fixing	15.0	1900.0	13.0	60.0	15.0	20.0

Linear Guide Rails

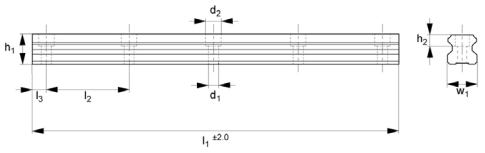

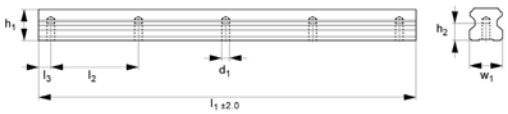



Part Number	Rail Type	Rail size	l1	h1	l2	w1	l3
20166328	Rear Fixing	15.0	1960.0	13.0	60.0	15.0	20.0
20166335	Rear Fixing	15.0	2020.0	13.0	60.0	15.0	20.0
20166342	Rear Fixing	15.0	2080.0	13.0	60.0	15.0	20.0
20166359	Rear Fixing	15.0	2140.0	13.0	60.0	15.0	20.0
20166366	Rear Fixing	15.0	2220.0	13.0	60.0	15.0	20.0
20166373	Rear Fixing	15.0	2260.0	13.0	60.0	15.0	20.0
20166380	Rear Fixing	15.0	2320.0	13.0	60.0	15.0	20.0
20166397	Rear Fixing	15.0	2380.0	13.0	60.0	15.0	20.0
20166403	Rear Fixing	15.0	2440.0	13.0	60.0	15.0	20.0
20166410	Rear Fixing	15.0	2500.0	13.0	60.0	15.0	20.0
20166427	Rear Fixing	15.0	2560.0	13.0	60.0	15.0	20.0
20166434	Rear Fixing	15.0	2620.0	13.0	60.0	15.0	20.0
20166441	Rear Fixing	15.0	2680.0	13.0	60.0	15.0	20.0
20166458	Rear Fixing	15.0	2740.0	13.0	60.0	15.0	20.0
20166465	Rear Fixing	15.0	2800.0	13.0	60.0	15.0	20.0
20166472	Rear Fixing	15.0	2860.0	13.0	60.0	15.0	20.0
20166489	Rear Fixing	15.0	2920.0	13.0	60.0	15.0	20.0
20166496	Rear Fixing	15.0	2980.0	13.0	60.0	15.0	20.0
20166502	Rear Fixing	15.0	3040.0	13.0	60.0	15.0	20.0
20166519	Rear Fixing	15.0	3100.0	13.0	60.0	15.0	20.0
20166526	Rear Fixing	15.0	3160.0	13.0	60.0	15.0	20.0
20166533	Rear Fixing	15.0	3220.0	13.0	60.0	15.0	20.0
20166540	Rear Fixing	15.0	3280.0	13.0	60.0	15.0	20.0
20166557	Rear Fixing	15.0	3340.0	13.0	60.0	15.0	20.0
20166564	Rear Fixing	15.0	3400.0	13.0	60.0	15.0	20.0
20166571	Rear Fixing	15.0	3460.0	13.0	60.0	15.0	20.0

Linear Guide Rails

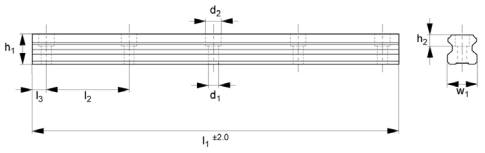

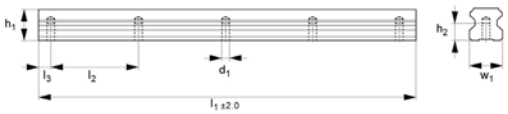



Part Number	Rail Type	Rail size	l1	h1	l2	w1	l3
20166588	Rear Fixing	15.0	3520.0	13.0	60.0	15.0	20.0
20166595	Rear Fixing	15.0	3580.0	13.0	60.0	15.0	20.0
20166601	Rear Fixing	15.0	3640.0	13.0	60.0	15.0	20.0
20166618	Rear Fixing	15.0	3700.0	13.0	60.0	15.0	20.0
20166625	Rear Fixing	15.0	3760.0	13.0	60.0	15.0	20.0
20166632	Rear Fixing	15.0	3820.0	13.0	60.0	15.0	20.0
20166649	Rear Fixing	15.0	3880.0	13.0	60.0	15.0	20.0
20166656	Rear Fixing	15.0	3940.0	13.0	60.0	15.0	20.0
20166663	Rear Fixing	15.0	4000.0	13.0	60.0	15.0	20.0
20166670	Rear Fixing	20.0	160.0	16.3	60.0	20.0	20.0
20166687	Rear Fixing	20.0	220.0	16.3	60.0	20.0	20.0
20166694	Rear Fixing	20.0	280.0	16.3	60.0	20.0	20.0
20166700	Rear Fixing	20.0	340.0	16.3	60.0	20.0	20.0
20166717	Rear Fixing	20.0	400.0	16.3	60.0	20.0	20.0
20166724	Rear Fixing	20.0	460.0	16.3	60.0	20.0	20.0
20166731	Rear Fixing	20.0	520.0	16.3	60.0	20.0	20.0
20166748	Rear Fixing	20.0	580.0	16.3	60.0	20.0	20.0
20166755	Rear Fixing	20.0	640.0	16.3	60.0	20.0	20.0
20166762	Rear Fixing	20.0	700.0	16.3	60.0	20.0	20.0
20166779	Rear Fixing	20.0	760.0	16.3	60.0	20.0	20.0
20166786	Rear Fixing	20.0	820.0	16.3	60.0	20.0	20.0
20166793	Rear Fixing	20.0	880.0	16.3	60.0	20.0	20.0
20166809	Rear Fixing	20.0	940.0	16.3	60.0	20.0	20.0
20166816	Rear Fixing	20.0	1000.0	16.3	60.0	20.0	20.0
20166823	Rear Fixing	20.0	1060.0	16.3	60.0	20.0	20.0
20166830	Rear Fixing	20.0	1120.0	16.3	60.0	20.0	20.0

Linear Guide Rails

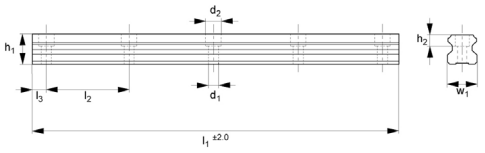

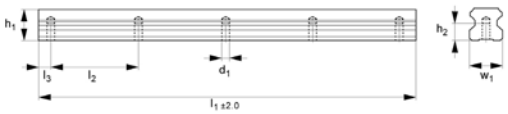



Part Number	Rail Type	Rail size	l1	h1	l2	w1	l3
20166847	Rear Fixing	20.0	1180.0	16.3	60.0	20.0	20.0
20166854	Rear Fixing	20.0	1240.0	16.3	60.0	20.0	20.0
20166861	Rear Fixing	20.0	1300.0	16.3	60.0	20.0	20.0
20166878	Rear Fixing	20.0	1360.0	16.3	60.0	20.0	20.0
20166885	Rear Fixing	20.0	1420.0	16.3	60.0	20.0	20.0
20166892	Rear Fixing	20.0	1480.0	16.3	60.0	20.0	20.0
20166908	Rear Fixing	20.0	1540.0	16.3	60.0	20.0	20.0
20166915	Rear Fixing	20.0	1600.0	16.3	60.0	20.0	20.0
20166922	Rear Fixing	20.0	1660.0	16.3	60.0	20.0	20.0
20166939	Rear Fixing	20.0	1720.0	16.3	60.0	20.0	20.0
20166946	Rear Fixing	20.0	1780.0	16.3	60.0	20.0	20.0
20166953	Rear Fixing	20.0	1840.0	16.3	60.0	20.0	20.0
20166960	Rear Fixing	20.0	1900.0	16.3	60.0	20.0	20.0
20166977	Rear Fixing	20.0	1960.0	16.3	60.0	20.0	20.0
20166984	Rear Fixing	20.0	2020.0	16.3	60.0	20.0	20.0
20166991	Rear Fixing	20.0	2080.0	16.3	60.0	20.0	20.0
20167004	Rear Fixing	20.0	2140.0	16.3	60.0	20.0	20.0
20167011	Rear Fixing	20.0	2200.0	16.3	60.0	20.0	20.0
20167028	Rear Fixing	20.0	2260.0	16.3	60.0	20.0	20.0
20167035	Rear Fixing	20.0	2320.0	16.3	60.0	20.0	20.0
20167042	Rear Fixing	20.0	2380.0	16.3	60.0	20.0	20.0
20167059	Rear Fixing	20.0	2440.0	16.3	60.0	20.0	20.0
20167066	Rear Fixing	20.0	2500.0	16.3	60.0	20.0	20.0
20167073	Rear Fixing	20.0	2560.0	16.3	60.0	20.0	20.0
20167080	Rear Fixing	20.0	2620.0	16.3	60.0	20.0	20.0
20167097	Rear Fixing	20.0	2680.0	16.3	60.0	20.0	20.0

Linear Guide Rails

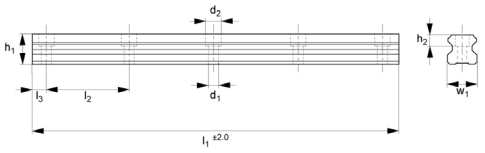

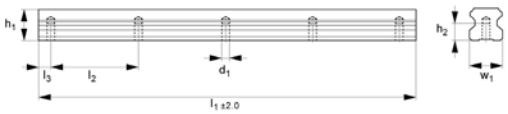



Part Number	Rail Type	Rail size	l1	h1	l2	w1	l3
20167103	Rear Fixing	20.0	2740.0	16.3	60.0	20.0	20.0
20167110	Rear Fixing	20.0	2800.0	16.3	60.0	20.0	20.0
20167127	Rear Fixing	20.0	2860.0	16.3	60.0	20.0	20.0
20167134	Rear Fixing	20.0	2920.0	16.3	60.0	20.0	20.0
20167141	Rear Fixing	20.0	2980.0	16.3	60.0	20.0	20.0
20167158	Rear Fixing	20.0	3040.0	16.3	60.0	20.0	20.0
20167165	Rear Fixing	20.0	3100.0	16.3	60.0	20.0	20.0
20167172	Rear Fixing	20.0	3160.0	16.3	60.0	20.0	20.0
20167189	Rear Fixing	20.0	3220.0	16.3	60.0	20.0	20.0
20167196	Rear Fixing	20.0	3280.0	16.3	60.0	20.0	20.0
20167202	Rear Fixing	20.0	3340.0	16.3	60.0	20.0	20.0
20167219	Rear Fixing	20.0	3400.0	16.3	60.0	20.0	20.0
20167226	Rear Fixing	20.0	3460.0	16.3	60.0	20.0	20.0
20167233	Rear Fixing	20.0	3520.0	16.3	60.0	20.0	20.0
20167240	Rear Fixing	20.0	3580.0	16.3	60.0	20.0	20.0
20167257	Rear Fixing	20.0	3640.0	16.3	60.0	20.0	20.0
20167264	Rear Fixing	20.0	3700.0	16.3	60.0	20.0	20.0
20167271	Rear Fixing	20.0	3760.0	16.3	60.0	20.0	20.0
20167288	Rear Fixing	20.0	3820.0	16.3	60.0	20.0	20.0
20167295	Rear Fixing	20.0	3880.0	16.3	60.0	20.0	20.0
20167301	Rear Fixing	20.0	3940.0	16.3	60.0	20.0	20.0
20167318	Rear Fixing	20.0	4000.0	16.3	60.0	20.0	20.0
20167325	Rear Fixing	25.0	160.0	19.2	60.0	23.0	20.0
20167332	Rear Fixing	25.0	220.0	19.2	60.0	23.0	20.0
20167349	Rear Fixing	25.0	280.0	19.2	60.0	23.0	20.0
20167356	Rear Fixing	25.0	340.0	19.2	60.0	23.0	20.0

Linear Guide Rails

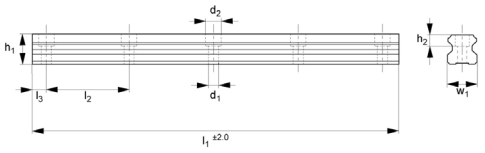

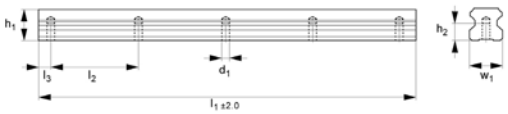



Part Number	Rail Type	Rail size	l1	h1	l2	w1	l3
20167363	Rear Fixing	25.0	400.0	19.2	60.0	23.0	20.0
20167370	Rear Fixing	25.0	460.0	19.2	60.0	23.0	20.0
20167387	Rear Fixing	25.0	520.0	19.2	60.0	23.0	20.0
20167394	Rear Fixing	25.0	580.0	19.2	60.0	23.0	20.0
20167400	Rear Fixing	25.0	640.0	19.2	60.0	23.0	20.0
20167417	Rear Fixing	25.0	700.0	19.2	60.0	23.0	20.0
20167424	Rear Fixing	25.0	760.0	19.2	60.0	23.0	20.0
20167431	Rear Fixing	25.0	820.0	19.2	60.0	23.0	20.0
20167448	Rear Fixing	25.0	880.0	19.2	60.0	23.0	20.0
20167455	Rear Fixing	25.0	940.0	19.2	60.0	23.0	20.0
20167462	Rear Fixing	25.0	1000.0	19.2	60.0	23.0	20.0
20167479	Rear Fixing	25.0	1060.0	19.2	60.0	23.0	20.0
20167486	Rear Fixing	25.0	1120.0	19.2	60.0	23.0	20.0
20167493	Rear Fixing	25.0	1180.0	19.2	60.0	23.0	20.0
20167509	Rear Fixing	25.0	1240.0	19.2	60.0	23.0	20.0
20167516	Rear Fixing	25.0	1300.0	19.2	60.0	23.0	20.0
20167523	Rear Fixing	25.0	1360.0	19.2	60.0	23.0	20.0
20167530	Rear Fixing	25.0	1420.0	19.2	60.0	23.0	20.0
20167547	Rear Fixing	25.0	1480.0	19.2	60.0	23.0	20.0
20167554	Rear Fixing	25.0	1540.0	19.2	60.0	23.0	20.0
20167561	Rear Fixing	25.0	1600.0	19.2	60.0	23.0	20.0
20167578	Rear Fixing	25.0	1660.0	19.2	60.0	23.0	20.0
20167585	Rear Fixing	25.0	1720.0	19.2	60.0	23.0	20.0
20167592	Rear Fixing	25.0	1780.0	19.2	60.0	23.0	20.0
20167608	Rear Fixing	25.0	1840.0	19.2	60.0	23.0	20.0
20167615	Rear Fixing	25.0	1900.0	19.2	60.0	23.0	20.0

Linear Guide Rails

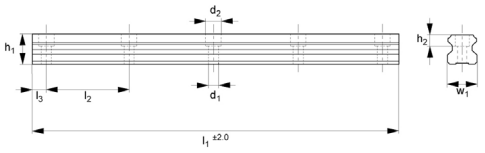

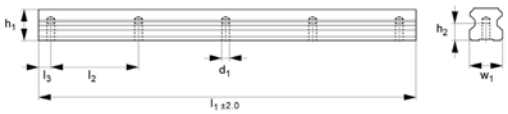



Part Number	Rail Type	Rail size	l1	h1	l2	w1	l3
20167622	Rear Fixing	25.0	1960.0	19.2	60.0	23.0	20.0
20167639	Rear Fixing	25.0	2020.0	19.2	60.0	23.0	20.0
20167646	Rear Fixing	25.0	2080.0	19.2	60.0	23.0	20.0
20167653	Rear Fixing	25.0	2140.0	19.2	60.0	23.0	20.0
20167660	Rear Fixing	25.0	2200.0	19.2	60.0	23.0	20.0
20167677	Rear Fixing	25.0	2260.0	19.2	60.0	23.0	20.0
20167684	Rear Fixing	25.0	2320.0	19.2	60.0	23.0	20.0
20167691	Rear Fixing	25.0	2380.0	19.2	60.0	23.0	20.0
20167707	Rear Fixing	25.0	2440.0	19.2	60.0	23.0	20.0
20167714	Rear Fixing	25.0	2500.0	19.2	60.0	23.0	20.0
20167721	Rear Fixing	25.0	2560.0	19.2	60.0	23.0	20.0
20167738	Rear Fixing	25.0	2620.0	19.2	60.0	23.0	20.0
20167745	Rear Fixing	25.0	2680.0	19.2	60.0	23.0	20.0
20167752	Rear Fixing	25.0	2740.0	19.2	60.0	23.0	20.0
20167769	Rear Fixing	25.0	2800.0	19.2	60.0	23.0	20.0
20167776	Rear Fixing	25.0	2860.0	19.2	60.0	23.0	20.0
20167783	Rear Fixing	25.0	2920.0	19.2	60.0	23.0	20.0
20167790	Rear Fixing	25.0	2980.0	19.2	60.0	23.0	20.0
20167806	Rear Fixing	25.0	3040.0	19.2	60.0	23.0	20.0
20167813	Rear Fixing	25.0	3100.0	19.2	60.0	23.0	20.0
20167820	Rear Fixing	25.0	3160.0	19.2	60.0	23.0	20.0
20167837	Rear Fixing	25.0	3220.0	19.2	60.0	23.0	20.0
20167844	Rear Fixing	25.0	3280.0	19.2	60.0	23.0	20.0
20167851	Rear Fixing	25.0	3340.0	19.2	60.0	23.0	20.0
20167868	Rear Fixing	25.0	3400.0	19.2	60.0	23.0	20.0
20167875	Rear Fixing	25.0	3460.0	19.2	60.0	23.0	20.0

Linear Guide Rails

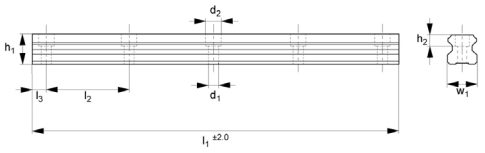

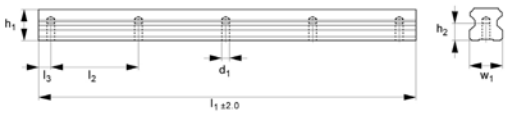



Part Number	Rail Type	Rail size	l1	h1	l2	w1	l3
20167882	Rear Fixing	25.0	3520.0	19.2	60.0	23.0	20.0
20167899	Rear Fixing	25.0	3580.0	19.2	60.0	23.0	20.0
20167905	Rear Fixing	25.0	3640.0	19.2	60.0	23.0	20.0
20167912	Rear Fixing	25.0	3700.0	19.2	60.0	23.0	20.0
20167929	Rear Fixing	25.0	3760.0	19.2	60.0	23.0	20.0
20167936	Rear Fixing	25.0	3820.0	19.2	60.0	23.0	20.0
20167943	Rear Fixing	25.0	3880.0	19.2	60.0	23.0	20.0
20167950	Rear Fixing	25.0	3940.0	19.2	60.0	23.0	20.0
20167967	Rear Fixing	25.0	4000.0	19.2	60.0	23.0	20.0
20167974	Rear Fixing	30.0	200.0	22.8	80.0	28.0	20.0
20167981	Rear Fixing	30.0	280.0	22.8	80.0	28.0	20.0
20167998	Rear Fixing	30.0	360.0	22.8	80.0	28.0	20.0
20168001	Rear Fixing	30.0	440.0	22.8	80.0	28.0	20.0
20168018	Rear Fixing	30.0	520.0	22.8	80.0	28.0	20.0
20168025	Rear Fixing	30.0	600.0	22.8	80.0	28.0	20.0
20168032	Rear Fixing	30.0	680.0	22.8	80.0	28.0	20.0
20168049	Rear Fixing	30.0	760.0	22.8	80.0	28.0	20.0
20168056	Rear Fixing	30.0	840.0	22.8	80.0	28.0	20.0
20168063	Rear Fixing	30.0	920.0	22.8	80.0	28.0	20.0
20168070	Rear Fixing	30.0	1000.0	22.8	80.0	28.0	20.0
20168087	Rear Fixing	30.0	1080.0	22.8	80.0	28.0	20.0
20168094	Rear Fixing	30.0	1160.0	22.8	80.0	28.0	20.0
20168100	Rear Fixing	30.0	1240.0	22.8	80.0	28.0	20.0
20168117	Rear Fixing	30.0	1320.0	22.8	80.0	28.0	20.0
20168124	Rear Fixing	30.0	1400.0	22.8	80.0	28.0	20.0
20168131	Rear Fixing	30.0	1480.0	22.8	80.0	28.0	20.0

Linear Guide Rails

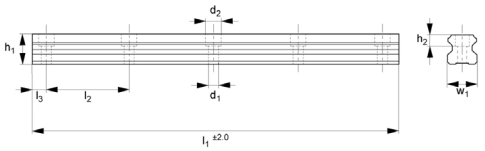

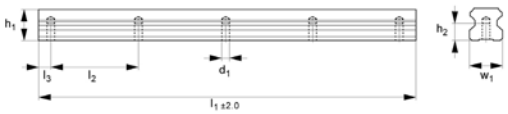



Part Number	Rail Type	Rail size	l1	h1	l2	w1	l3
20168148	Rear Fixing	30.0	1560.0	22.8	80.0	28.0	20.0
20168155	Rear Fixing	30.0	1640.0	22.8	80.0	28.0	20.0
20168162	Rear Fixing	30.0	1720.0	22.8	80.0	28.0	20.0
20168179	Rear Fixing	30.0	1800.0	22.8	80.0	28.0	20.0
20168186	Rear Fixing	30.0	1880.0	22.8	80.0	28.0	20.0
20168193	Rear Fixing	30.0	1960.0	22.8	80.0	28.0	20.0
20168209	Rear Fixing	30.0	2040.0	22.8	80.0	28.0	20.0
20168216	Rear Fixing	30.0	2120.0	22.8	80.0	28.0	20.0
20168223	Rear Fixing	30.0	2200.0	22.8	80.0	28.0	20.0
20168230	Rear Fixing	30.0	2280.0	22.8	80.0	28.0	20.0
20168247	Rear Fixing	30.0	2360.0	22.8	80.0	28.0	20.0
20168254	Rear Fixing	30.0	2440.0	22.8	80.0	28.0	20.0
20168261	Rear Fixing	30.0	2520.0	22.8	80.0	28.0	20.0
20168278	Rear Fixing	30.0	2600.0	22.8	80.0	28.0	20.0
20168285	Rear Fixing	30.0	2680.0	22.8	80.0	28.0	20.0
20168292	Rear Fixing	30.0	2760.0	22.8	80.0	28.0	20.0
20168308	Rear Fixing	30.0	2840.0	22.8	80.0	28.0	20.0
20168315	Rear Fixing	30.0	2920.0	22.8	80.0	28.0	20.0
20168322	Rear Fixing	30.0	3000.0	22.8	80.0	28.0	20.0
20168339	Rear Fixing	30.0	3080.0	22.8	80.0	28.0	20.0
20168346	Rear Fixing	30.0	3160.0	22.8	80.0	28.0	20.0
20168353	Rear Fixing	30.0	3240.0	22.8	80.0	28.0	20.0
20168360	Rear Fixing	30.0	3320.0	22.8	80.0	28.0	20.0
20168377	Rear Fixing	30.0	3400.0	22.8	80.0	28.0	20.0
20168384	Rear Fixing	30.0	3480.0	22.8	80.0	28.0	20.0
20168391	Rear Fixing	30.0	3560.0	22.8	80.0	28.0	20.0

Linear Guide Rails

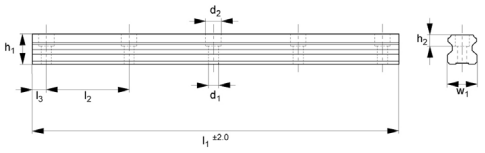

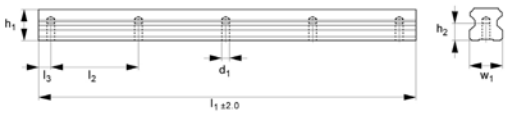



Part Number	Rail Type	Rail size	l1	h1	l2	w1	l3
20168407	Rear Fixing	30.0	3640.0	22.8	80.0	28.0	20.0
20168414	Rear Fixing	30.0	3720.0	22.8	80.0	28.0	20.0
20168421	Rear Fixing	30.0	3800.0	22.8	80.0	28.0	20.0
20168438	Rear Fixing	30.0	3880.0	22.8	80.0	28.0	20.0
20168445	Rear Fixing	30.0	3960.0	22.8	80.0	28.0	20.0
20168452	Rear Fixing	30.0	4000.0	22.8	80.0	28.0	20.0
20168469	Rear Fixing	35.0	200.0	26.0	80.0	34.0	20.0
20168476	Rear Fixing	35.0	280.0	26.0	80.0	34.0	20.0
20168483	Rear Fixing	35.0	360.0	26.0	80.0	34.0	20.0
20168490	Rear Fixing	35.0	440.0	26.0	80.0	34.0	20.0
20168506	Rear Fixing	35.0	520.0	26.0	80.0	34.0	20.0
20168513	Rear Fixing	35.0	600.0	26.0	80.0	34.0	20.0
20168520	Rear Fixing	35.0	680.0	26.0	80.0	34.0	20.0
20168537	Rear Fixing	35.0	760.0	26.0	80.0	34.0	20.0
20168544	Rear Fixing	35.0	840.0	26.0	80.0	34.0	20.0
20168551	Rear Fixing	35.0	920.0	26.0	80.0	34.0	20.0
20168568	Rear Fixing	35.0	1000.0	26.0	80.0	34.0	20.0
20168575	Rear Fixing	35.0	1080.0	26.0	80.0	34.0	20.0
20168582	Rear Fixing	35.0	1160.0	26.0	80.0	34.0	20.0
20168599	Rear Fixing	35.0	1240.0	26.0	80.0	34.0	20.0
20168605	Rear Fixing	35.0	1320.0	26.0	80.0	34.0	20.0
20168612	Rear Fixing	35.0	1400.0	26.0	80.0	34.0	20.0
20168629	Rear Fixing	35.0	1480.0	26.0	80.0	34.0	20.0
20168636	Rear Fixing	35.0	1560.0	26.0	80.0	34.0	20.0
20168643	Rear Fixing	35.0	1640.0	26.0	80.0	34.0	20.0
20168650	Rear Fixing	35.0	1720.0	26.0	80.0	34.0	20.0

Linear Guide Rails

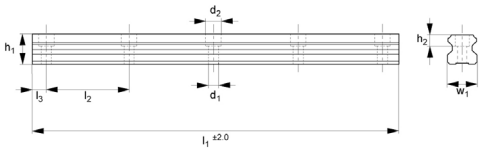

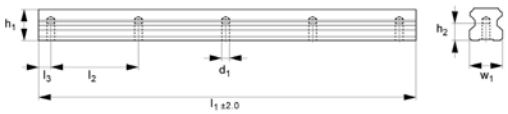



Part Number	Rail Type	Rail size	l1	h1	l2	w1	l3
20168667	Rear Fixing	35.0	1800.0	26.0	80.0	34.0	20.0
20168674	Rear Fixing	35.0	1880.0	26.0	80.0	34.0	20.0
20168681	Rear Fixing	35.0	1960.0	26.0	80.0	34.0	20.0
20168698	Rear Fixing	35.0	2040.0	26.0	80.0	34.0	20.0
20168704	Rear Fixing	35.0	2120.0	26.0	80.0	34.0	20.0
20168711	Rear Fixing	35.0	2200.0	26.0	80.0	34.0	20.0
20168728	Rear Fixing	35.0	2280.0	26.0	80.0	34.0	20.0
20168735	Rear Fixing	35.0	2360.0	26.0	80.0	34.0	20.0
20168742	Rear Fixing	35.0	2440.0	26.0	80.0	34.0	20.0
20168759	Rear Fixing	35.0	2520.0	26.0	80.0	34.0	20.0
20168766	Rear Fixing	35.0	2600.0	26.0	80.0	34.0	20.0
20168773	Rear Fixing	35.0	2680.0	26.0	80.0	34.0	20.0
20168780	Rear Fixing	35.0	2760.0	26.0	80.0	34.0	20.0
20168797	Rear Fixing	35.0	2840.0	26.0	80.0	34.0	20.0
20168803	Rear Fixing	35.0	2920.0	26.0	80.0	34.0	20.0
20168810	Rear Fixing	35.0	3000.0	26.0	80.0	34.0	20.0
20168827	Rear Fixing	35.0	3080.0	26.0	80.0	34.0	20.0
20168834	Rear Fixing	35.0	3160.0	26.0	80.0	34.0	20.0
20168841	Rear Fixing	35.0	3240.0	26.0	80.0	34.0	20.0
20168858	Rear Fixing	35.0	3320.0	26.0	80.0	34.0	20.0
20168865	Rear Fixing	35.0	3400.0	26.0	80.0	34.0	20.0
20168872	Rear Fixing	35.0	3480.0	26.0	80.0	34.0	20.0
20168889	Rear Fixing	35.0	3560.0	26.0	80.0	34.0	20.0
20168896	Rear Fixing	35.0	3640.0	26.0	80.0	34.0	20.0
20168902	Rear Fixing	35.0	3720.0	26.0	80.0	34.0	20.0
20168919	Rear Fixing	35.0	3800.0	26.0	80.0	34.0	20.0

Linear Guide Rails

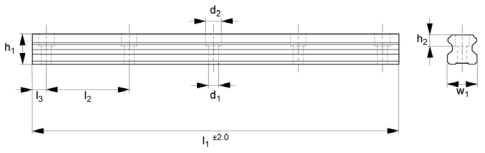

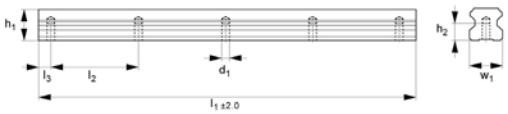



Part Number	Rail Type	Rail size	l1	h1	l2	w1	l3
20168926	Rear Fixing	35.0	3880.0	26.0	80.0	34.0	20.0
20168933	Rear Fixing	35.0	3960.0	26.0	80.0	34.0	20.0
20168940	Rear Fixing	35.0	4000.0	26.0	80.0	34.0	20.0
20168957	Rear Fixing	45.0	255.0	31.1	105.0	45.0	22.5
20168964	Rear Fixing	45.0	360.0	31.1	105.0	45.0	22.5
20168971	Rear Fixing	45.0	465.0	31.1	105.0	45.0	22.5
20168988	Rear Fixing	45.0	570.0	31.1	105.0	45.0	22.5
20168995	Rear Fixing	45.0	675.0	31.1	105.0	45.0	22.5
20169008	Rear Fixing	45.0	780.0	31.1	105.0	45.0	22.5
20169015	Rear Fixing	45.0	885.0	31.1	105.0	45.0	22.5
20169022	Rear Fixing	45.0	990.0	31.1	105.0	45.0	22.5
20169039	Rear Fixing	45.0	1095.0	31.1	105.0	45.0	22.5
20169046	Rear Fixing	45.0	1200.0	31.1	105.0	45.0	22.5
20169053	Rear Fixing	45.0	1305.0	31.1	105.0	45.0	22.5
20169060	Rear Fixing	45.0	1410.0	31.1	105.0	45.0	22.5
20169077	Rear Fixing	45.0	1515.0	31.1	105.0	45.0	22.5
20169084	Rear Fixing	45.0	1620.0	31.1	105.0	45.0	22.5
20169091	Rear Fixing	45.0	1725.0	31.1	105.0	45.0	22.5
20169107	Rear Fixing	45.0	1830.0	31.1	105.0	45.0	22.5
20169114	Rear Fixing	45.0	1935.0	31.1	105.0	45.0	22.5
20169121	Rear Fixing	45.0	2040.0	31.1	105.0	45.0	22.5
20169138	Rear Fixing	45.0	2145.0	31.1	105.0	45.0	22.5
20169145	Rear Fixing	45.0	2250.0	31.1	105.0	45.0	22.5
20169152	Rear Fixing	45.0	2355.0	31.1	105.0	45.0	22.5
20169169	Rear Fixing	45.0	2460.0	31.1	105.0	45.0	22.5
20169176	Rear Fixing	45.0	2565.0	31.1	105.0	45.0	22.5

Linear Guide Rails

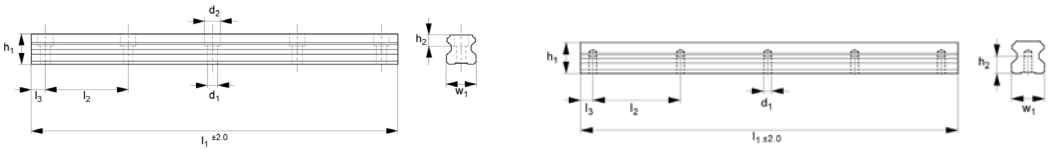



Part Number	Rail Type	Rail size	l1	h1	l2	w1	l3
20169183	Rear Fixing	45.0	2670.0	31.1	105.0	45.0	22.5
20169190	Rear Fixing	45.0	2880.0	31.1	105.0	45.0	22.5
20169206	Rear Fixing	45.0	2985.0	31.1	105.0	45.0	22.5
20169213	Rear Fixing	45.0	3090.0	31.1	105.0	45.0	22.5
20169220	Rear Fixing	45.0	3195.0	31.1	105.0	45.0	22.5
20169237	Rear Fixing	45.0	3300.0	31.1	105.0	45.0	22.5
20169244	Rear Fixing	45.0	3405.0	31.1	105.0	45.0	22.5
20169251	Rear Fixing	45.0	3510.0	31.1	105.0	45.0	22.5
20169268	Rear Fixing	45.0	3615.0	31.1	105.0	45.0	22.5
20169275	Rear Fixing	45.0	3720.0	31.1	105.0	45.0	22.5
20169282	Rear Fixing	45.0	3825.0	31.1	105.0	45.0	22.5
20169299	Rear Fixing	45.0	3930.0	31.1	105.0	45.0	22.5
20174750	Rear Fixing	45.0	4000.0	31.1	105.0	45.0	22.5

Unflanged Carriages - Low

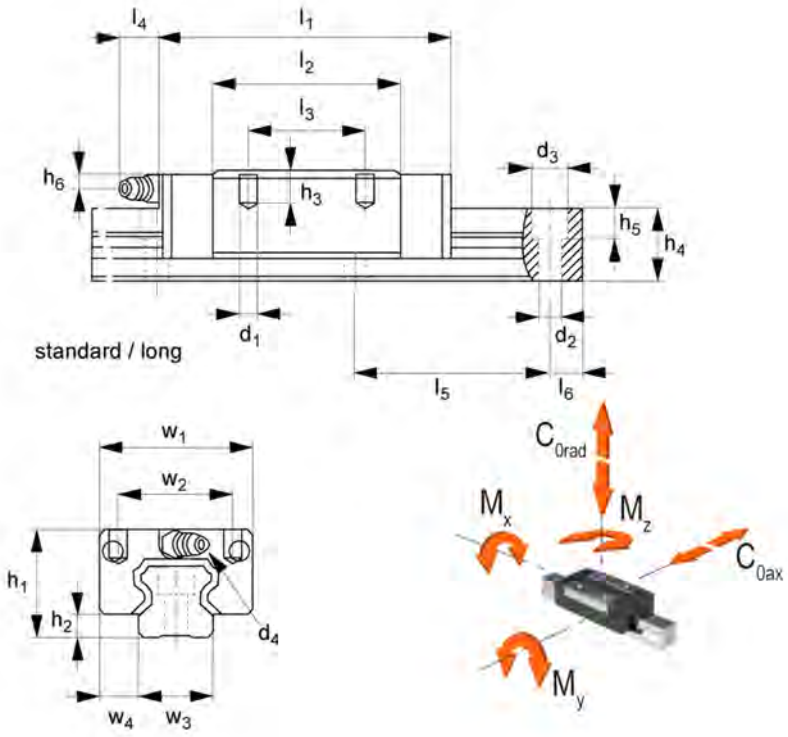



Features

- It gives precision, stability, and dependability.
- Unflanged design provides a more compact solution when compared against the flanged carriages.
- Its low profile provides an even smaller compact solution when compared to standard unflanged linear carriages.

Specifications

Material: Steel

These low-profile unflanged carriages are linear bearings used for heavy-duty and precise linear motion applications. They give precision, stability, and dependability. The four row contact with the mating rail offers the same load capacity capabilities regardless of the load pressing into the carriage or hanging from it.

The unflanged design provides a more compact solution but can only be mounted to from the top. The carriages' ball retainers allow for a quieter operation whilst improving lubrication of the system. It also ensures the balls remain in place should the carriage be removed from the rail in error.

Its low profile provides an even smaller compact solution when compared again the standard unflanged linear carriages. It is used in many applications, including special purpose equipment, automation, material handling systems, medical devices, etc.

Unflanged Carriages - Low

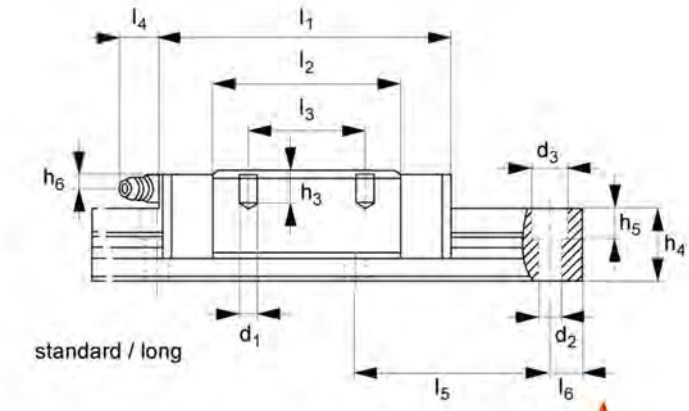

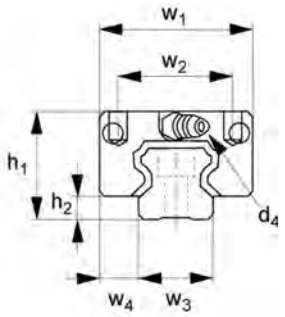

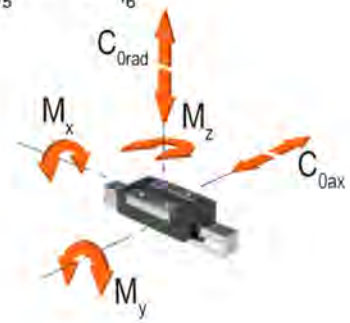



Part Number	Rail size	l1	h1	l2	w1	h2	d1
20158880	15.0	40.6	24.0	22.2	34.0	3.3	M4
20158897	15.0	58.6	24.0	40.2	34.0	3.3	M4
20158873	15.0	66.1	24.0	47.7	34.0	3.0	M4
20158910	20.0	48.3	28.0	27.5	42.0	4.5	M5
20158903	20.0	69.3	28.0	48.5	42.0	4.5	M5
20158934	25.0	54.0	33.0	32.3	48.0	5.8	M6
20158927	25.0	79.2	33.0	57.5	48.0	5.8	M6
20158958	30.0	64.2	42.0	37.2	60.0	7.0	M8
20158965	30.0	94.8	42.0	67.8	60.0	7.0	M8
20158941	30.0	105.0	42.0	78.0	60.0	7.0	M8
20158972	30.0	130.5	42.0	103.5	60.0	7.0	M8
20158996	35.0	75.5	48.0	44.5	70.0	7.5	M8
20159009	35.0	111.5	48.0	80.5	70.0	7.5	M8
20158989	35.0	123.5	48.0	92.5	70.0	7.5	M8
20159016	35.0	153.5	48.0	122.5	70.0	7.5	M8
20159023	45.0	129.0	60.0	94.0	86.0	8.9	M10
20159030	45.0	145.0	60.0	110.0	86.0	8.9	M10
20159047	45.0	174.0	60.0	139.0	86.0	8.9	M10

Unflanged Carriages - Low

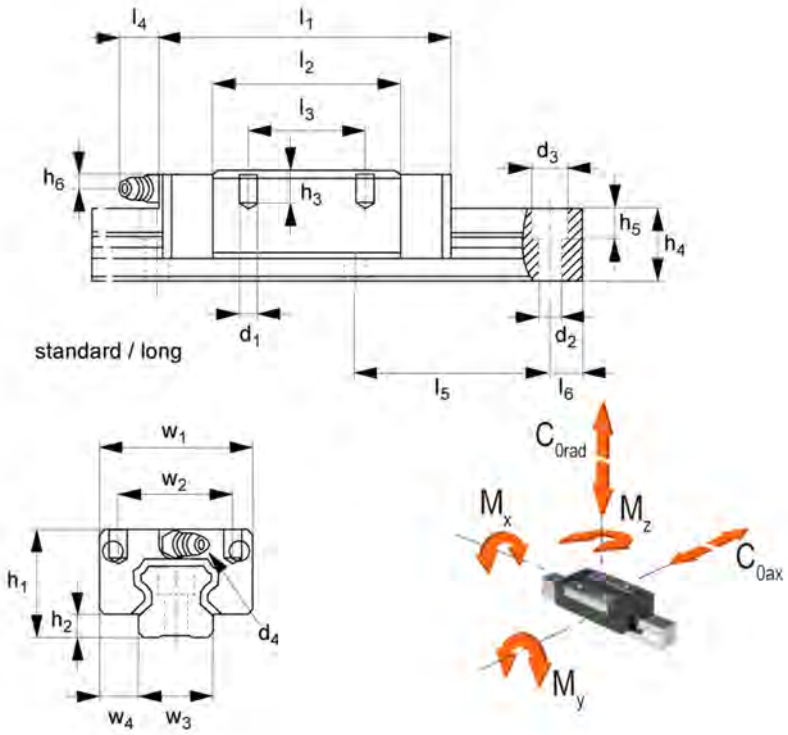



Part Number	Rail size	l1	h1	l2	w1	h2	d1
20159054	55.0	155.0	70.0	116.0	100.0	12.7	M12
20159061	55.0	193.0	70.0	154.0	100.0	12.7	M12
20159078	55.0	210.0	70.0	171.0	100.0	12.7	M12

Unflanged Carriages - Standard

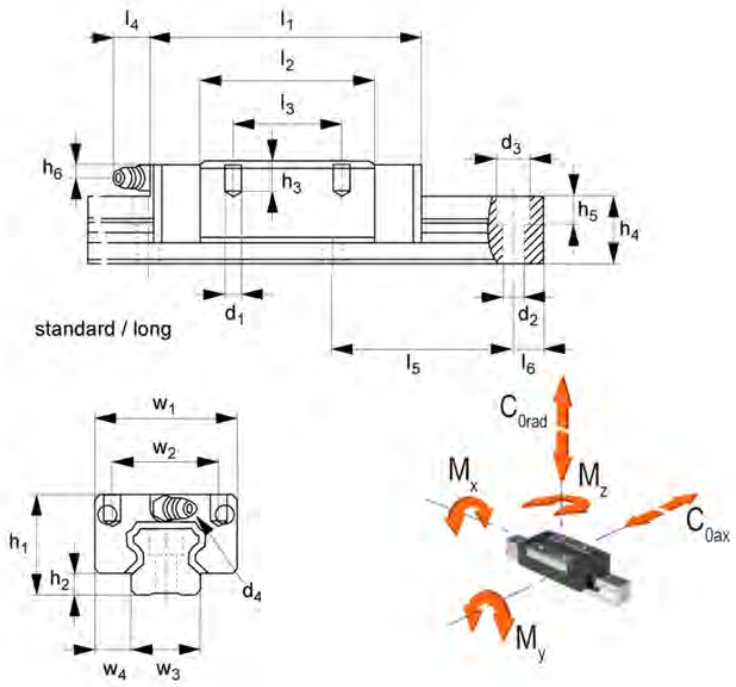



Features

- It gives precision, stability, and dependability.
- Unflanged design provides a more compact solution but can only be mounted to from the top.
- The carriages' ball retainers allow for a quieter operation whilst improving lubrication of the system.

Specifications

Material: Steel

These low-profile unflanged carriages are linear bearings used for heavy-duty and precise linear motion applications. They give precision, stability, and dependability. The four row contact with the mating rail offers the same load capacity capabilities regardless of the load pressing into the carriage or hanging from it.

The unflanged design provides a more compact solution but can only be mounted to from the top. The carriages' ball retainers allow for a quieter operation whilst improving lubrication of the system. It also ensures the balls remain in place should the carriage be removed from the rail in error.

The carriages are supplied on dummy blocks which must be offered up to the edge of the rail the carriage is going onto during installation. Slide the carriage from the dummy block onto the rail to ensure no damage can occur. It is used in many applications, including special purpose equipment, automation, material handling systems, medical devices, etc.

Unflanged Carriages - Standard

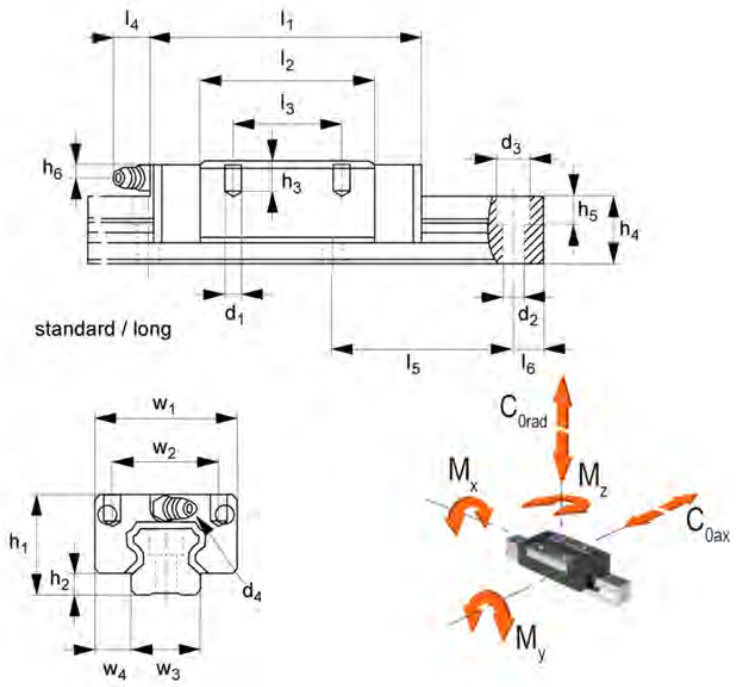



Part Number	Rail size	l1	h1	l2	w1	h2	d1
20158507	15.0	58.6	28.0	40.2	34.0	3.3	M4
20158514	20.0	69.3	30.0	48.5	44.0	4.5	M5
20158521	20.0	82.1	30.0	61.3	44.0	4.5	M5
20158545	25.0	79.2	40.0	57.5	48.0	5.8	M6
20158828	25.0	93.9	40.0	72.2	48.0	5.8	M6
20158538	25.0	108.6	40.0	86.9	48.0	5.8	M6
20158569	30.0	94.8	45.0	67.8	60.0	7.0	M8
20158835	30.0	105.0	45.0	78.0	60.0	7.0	M8
20158552	30.0	130.5	45.0	103.5	60.0	7.0	M8
20158583	35.0	111.5	55.0	80.5	70.0	7.5	M8
20158842	35.0	123.5	55.0	92.5	70.0	7.5	M8
20158576	35.0	153.5	55.0	122.5	70.0	7.5	M8
20158606	45.0	129.0	70.0	94.0	86.0	8.9	M10
20158859	45.0	145.0	70.0	110.0	86.0	8.9	M10
20158590	45.0	174.0	70.0	139.0	86.0	8.9	M10
20158620	55.0	155.0	80.0	116.0	100.0	12.7	M12
20158866	55.0	193.0	80.0	154.0	100.0	12.7	M12
20158613	55.0	210.0	80.0	171.0	100.0	12.7	M12

Unflanged Stainless Carriages

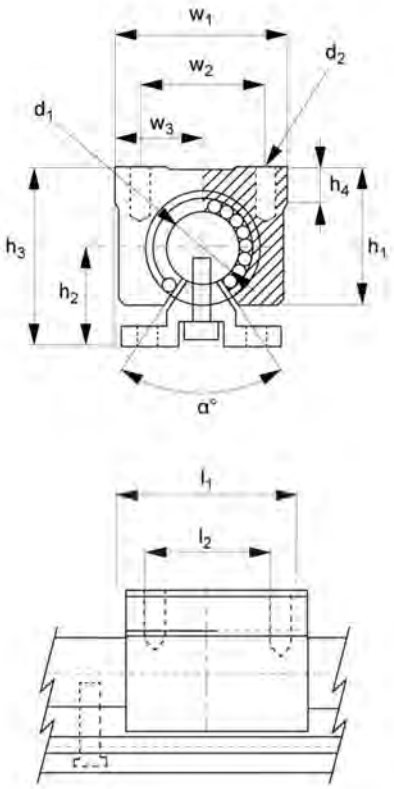



Features

- Unflanged design enables a simple compact installation and integration into existing systems.
- It keeps the weight down, take the loads and facilitate the movement.
- It can withstand temperatures from -20C to +120C.

Specifications

Material: Aluminium

These Unflanged Stainless Carriages are a type of linear bearing particularly useful for heavy loads in various applications where linear motion is guided and supported. Their rails are made of contoured aluminium, with two hardened stainless steel shafts pressed to serve as raceways for the runner block balls.

Because of its low friction, the unflanged design provides a larger surface contact area with the linear guide, ensuring increased stability and precision in motion. The lack of flanges also allows for additional flexibility in terms of space and location. Ball retainers in the carriages allow for far larger parallelism and mounting base height offsets, allowing for considerable misalignment and allowing the carriages to be withdrawn from the rail without losing any balls.

Its structure is highly corrosion resistant, making it perfect for use in areas with moisture, chemicals, or severe temperatures. It can withstand temperatures ranging from -20C to +120C. It can be used in various applications, including machinery, handling technology, machine enclosures, medical, food, etc.

Unflanged Stainless Carriages

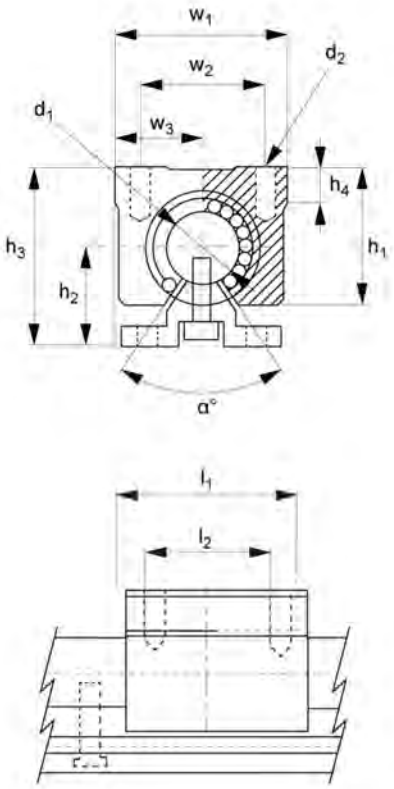



Part Number	d1 tol H6	l1	d2	h1	h2	h3 ±005	h4
20263416	16.0	45.0	M5x12	33.0	26.0	46.0	9.0
20263690	20.0	50.0	M6x12	39.0	32.0	55.0	11.0
20263423	25.0	65.0	M6x12	47.0	36.0	63.0	14.0
20263706	16.0	45.0	M5x12	33.0	26.0	46.0	9.0
20263430	20.0	50.0	M6x12	39.0	32.0	55.0	11.0
20263713	25.0	65.0	M6x12	47.0	36.0	63.0	14.0

Flanged Carriages - Standard

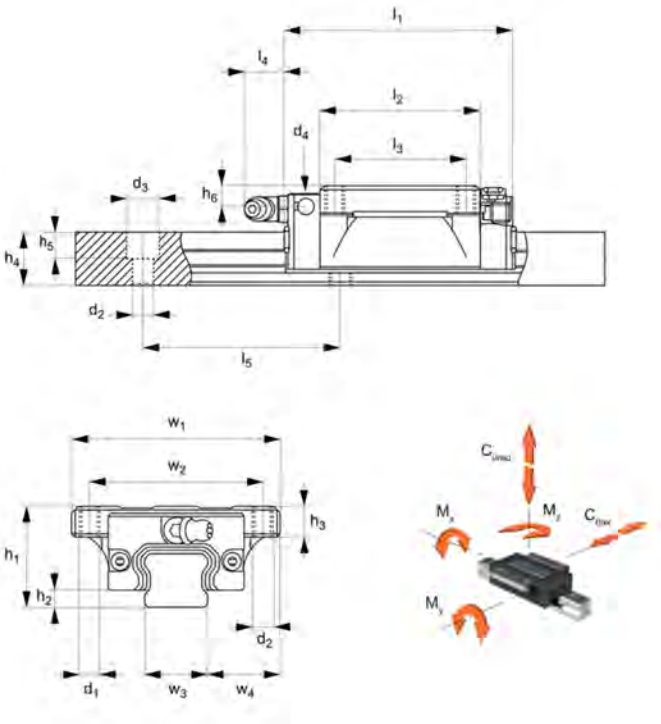



Features

- Steel rails are through hardened for increased durability and wear resistant life span.
- Provide accuracy, stability, and reliability.
- Flange design provides both a greater surface area for the moving component to be mounted to, but also the ability to fasten to the moving part.

Specifications

Material: Steel

These Flanged Standard Carriages are a type of linear bearing utilised for heavy-duty and accurate linear motion applications. They provide accuracy, stability, and reliability. Their steel rails are through hardened for increased durability and wear resistant life span.

The flange design provides both a greater surface area for the moving component to be mounted to, but also the ability to fasten to the moving part from either above or below the carriage.

The carriages will be provided separately from the rails and mounted on dummy blocks. To put the carriage onto the rails, align the dummy block to the end of the rail and slide it on. It is used in many applications, including equipment, automation, material handling systems, medical devices, etc.

Flanged Carriages - Standard

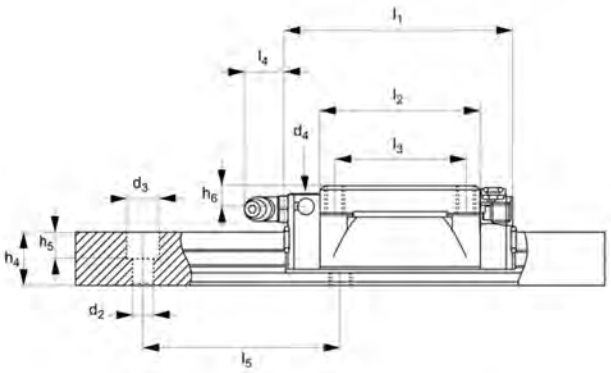

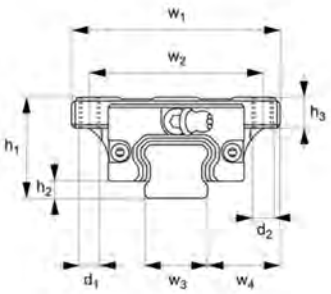





Part Number	Rail size	l1	h1	l2	w1	l3	h2
20158637	15.0	58.6	24.0	40.2	47.0	30.0	3.4
20158767	15.0	66.1	24.0	47.7	47.0	30.0	3.4
20158644	20.0	70.1	30.0	48.5	63.0	40.0	4.5
20158651	20.0	82.9	30.0	61.3	63.0	40.0	4.5
20158668	25.0	79.2	36.0	57.5	70.0	45.0	5.8
20158774	25.0	93.9	36.0	72.2	70.0	45.0	5.8
20158675	25.0	108.6	36.0	86.9	70.0	45.0	5.8
20158682	30.0	94.8	42.0	67.8	90.0	52.0	7.0
20158781	30.0	105.0	42.0	78.0	90.0	52.0	7.0
20158699	30.0	130.5	42.0	103.5	90.0	52.0	7.0
20158705	35.0	111.5	48.0	80.5	100.0	62.0	7.5
20158798	35.0	123.5	48.0	92.5	100.0	62.0	7.5
20158712	35.0	153.5	48.0	122.5	100.0	62.0	7.5
20158729	45.0	129.0	60.0	94.0	120.0	80.0	8.9
20158804	45.0	145.0	60.0	110.0	120.0	80.0	8.9
20158736	45.0	174.0	60.0	139.0	120.0	80.0	8.9
20158743	55.0	155.0	70.0	116.0	140.0	95.0	12.7
20158811	55.0	193.0	70.0	154.0	140.0	95.0	12.7
20158750	55.0	210.0	70.0	171.0	140.0	95.0	12.7

Rail Clamps

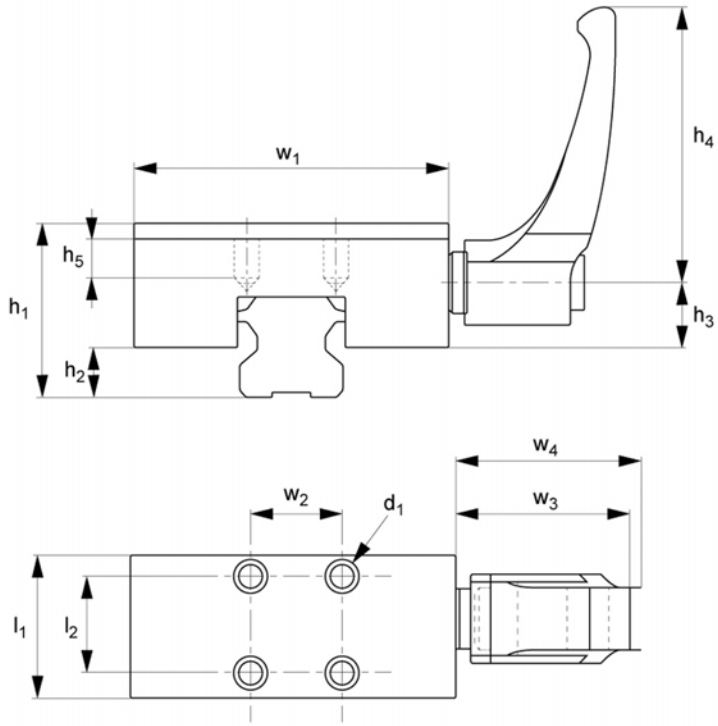



Features

- Used in combination with rail carriages.
- It has a circular motion instead of a friction coefficient, and reduced driving resistance.
- Used in heavy-duty applications such as machinery, railway systems, and manufacturing applications.

Specifications

Material: Aluminium

These Rail Clamps are used in combination with rail carriages. Made to endure demanding conditions such as heavy loads or vibrations, it offers a secure and strong grip on the rails and maintains remarkable strength and longevity.

By adjusting the clamping lever, the contact sections are pressed into contact with the rail, thereby fastening the carriage in place. It has a circular motion instead of a friction coefficient, reduced driving resistance, and lower energy consumption.

Designed with specialized mechanisms, it allows for easy installation and adjustment, guaranteeing a tight and sturdy connection. Used in heavy-duty applications such as machinery, railway systems, and manufacturing applications.

Rail Clamps

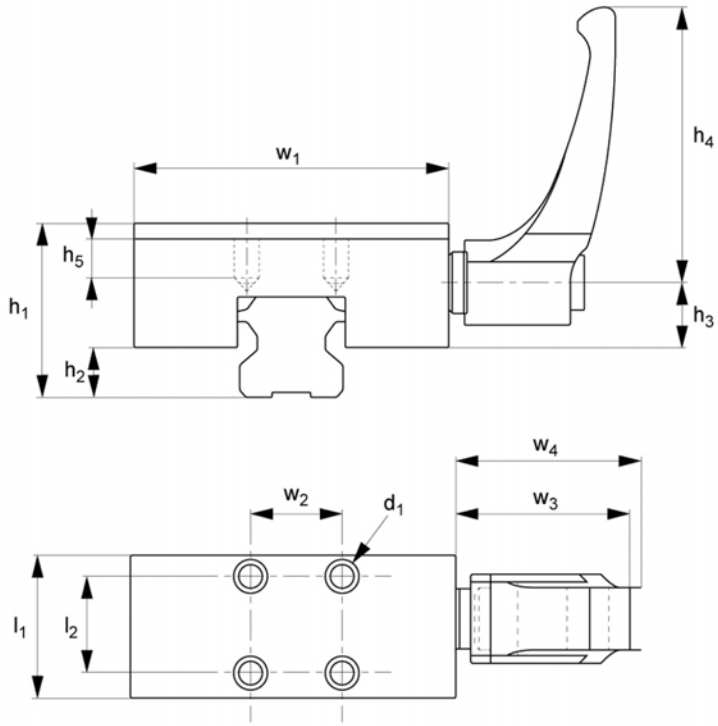



Part Number	For rail	h1	l1	w1	h2	h3	h4
20175719	15.0	24.0	25.0	47.0	4.5	12.5	44.0
20175818	15.0	28.0	25.0	47.0	4.5	12.5	44.0
20175795	20.0	28.0	24.0	60.0	8.0	13.0	63.0
20175863	20.0	30.0	24.0	60.0	8.0	13.0	63.0
20175764	25.0	33.0	30.0	70.0	9.0	15.0	63.0
20175788	25.0	36.0	30.0	70.0	9.0	15.0	63.0
20175948	25.0	40.0	30.0	70.0	9.0	15.0	63.0
20175726	30.0	42.0	39.0	90.0	12.0	21.5	78.0
20175771	35.0	48.0	39.0	100.0	13.0	21.5	78.0
20175955	45.0	60.0	44.0	120.0	12.0	26.5	78.0
20175801	55.0	70.0	49.0	140.0	17.0	31.0	95.0
20175825	15.0	24.0	20.0	34.0	4.5	12.9	40.0
20175832	20.0	30.0	24.0	44.0	6.0	16.0	40.0
20175849	25.0	36.0	30.0	48.0	7.0	19.6	44.0

Miniature Linear Rails

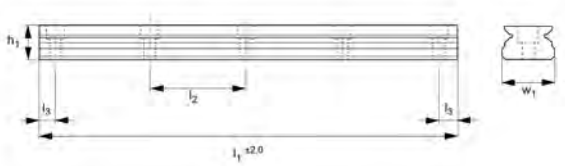

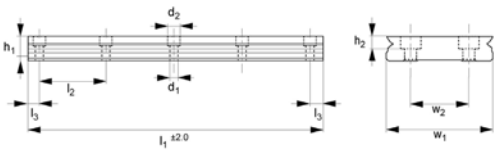



Features

- It is smaller and lighter than regular linear rails, making them excellent for applications requiring restricted space and weight.
- It must be mounted on accurately prepared surfaces.
- It can withstand dynamic loads while considering impact, vibration, and fatigue.

Specifications

Material: Stainless Steel
Weight: It will depend on the size of the miniature linear rail. From 0,05 Kg/m to 2,8 Kg/m

These Miniature Linear Rails are used to direct and support moving loads. It delivers smooth and accurate linear motion in small systems. They comprise a foundation rail, a sliding block, and a series of rolling parts. The base rail is attached to the machine frame, and the slide block slides along it. The rolling components, commonly ball bearings, sustain the weight and decrease friction between the sliding block and the base rail.

It can withstand dynamic loads while considering impact, vibration, and fatigue. As this is a precise system they must be mounted on accurately prepared surfaces.

The carriages come mounted on dummy blocks. Offer the carriage up to the rails and move it off the block and onto the rail to install it. They are often smaller and lighter than regular linear rails, making them excellent for applications requiring restricted space and weight, such as scientific applications, medical equipment, or semiconductor manufacturing.

Miniature Linear Rails

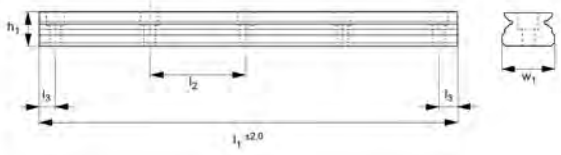

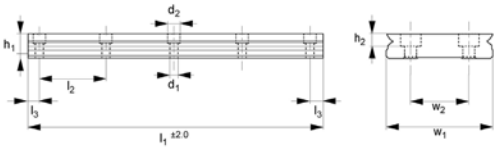



Part Number	Rail Type	l1	l2	l3	h1	w1	For screws
20174026	Standard width	25.0	10.0	2.5	2.6	3.0	M1.6
20174774	Standard width	35.0	10.0	2.5	2.6	3.0	M1.6
20174767	Standard width	45.0	10.0	2.5	2.6	3.0	M1.6
20174781	Standard width	55.0	10.0	2.5	2.6	3.0	M1.6
20174798	Standard width	65.0	10.0	2.5	2.6	3.0	M1.6
20174804	Standard width	75.0	10.0	2.5	2.6	3.0	M1.6
20174811	Standard width	85.0	10.0	2.5	2.6	3.0	M1.6
20174828	Standard width	95.0	10.0	2.5	2.6	3.0	M1.6
20174019	Standard width	105.0	10.0	2.5	2.6	3.0	M1.6
20174835	Standard width	115.0	10.0	2.5	2.6	3.0	M1.6
20174842	Standard width	125.0	10.0	2.5	2.6	3.0	M1.6
20174743	Standard width	135.0	10.0	2.5	2.6	3.0	M1.6
20174859	Standard width	145.0	10.0	2.5	2.6	3.0	M1.6
20174866	Standard width	155.0	10.0	2.5	2.6	3.0	M1.6
20174873	Standard width	165.0	10.0	2.5	2.6	3.0	M1.6
20174880	Standard width	175.0	10.0	2.5	2.6	3.0	M1.6
20174897	Standard width	185.0	10.0	2.5	2.6	3.0	M1.6
20174903	Standard width	195.0	10.0	2.5	2.6	3.0	M1.6
20174910	Standard width	205.0	10.0	2.5	2.6	3.0	M1.6
20174927	Standard width	215.0	10.0	2.5	2.6	3.0	M1.6
20174934	Standard width	225.0	10.0	2.5	2.6	3.0	M1.6
20174941	Standard width	235.0	10.0	2.5	2.6	3.0	M1.6
20174958	Standard width	245.0	10.0	2.5	2.6	3.0	M1.6
20174965	Standard width	255.0	10.0	2.5	2.6	3.0	M1.6
20174972	Standard width	265.0	10.0	2.5	2.6	3.0	M1.6
20174989	Standard width	275.0	10.0	2.5	2.6	3.0	M1.6

Miniature Linear Rails



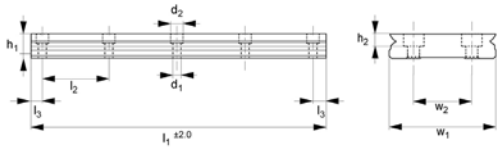



Part Number	Rail Type	l1	l2	l3	h1	w1	For screws
20174996	Standard width	285.0	10.0	2.5	2.6	3.0	M1.6
20175009	Standard width	295.0	10.0	2.5	2.6	3.0	M1.6
20175016	Standard width	305.0	10.0	2.5	2.6	3.0	M1.6
20175023	Standard width	315.0	10.0	2.5	2.6	3.0	M1.6
20175030	Standard width	325.0	10.0	2.5	2.6	3.0	M1.6
20175047	Standard width	335.0	10.0	2.5	2.6	3.0	M1.6
20175054	Standard width	345.0	10.0	2.5	2.6	3.0	M1.6
20175061	Standard width	355.0	10.0	2.5	2.6	3.0	M1.6
20175078	Standard width	365.0	10.0	2.5	2.6	3.0	M1.6
20175085	Standard width	375.0	10.0	2.5	2.6	3.0	M1.6
20175092	Standard width	385.0	10.0	2.5	2.6	3.0	M1.6
20175108	Standard width	395.0	10.0	2.5	2.6	3.0	M1.6
20175115	Standard width	405.0	10.0	2.5	2.6	3.0	M1.6
20175122	Standard width	415.0	10.0	2.5	2.6	3.0	M1.6
20175139	Standard width	425.0	10.0	2.5	2.6	3.0	M1.6
20175146	Standard width	435.0	10.0	2.5	2.6	3.0	M1.6
20175153	Standard width	445.0	10.0	2.5	2.6	3.0	M1.6
20175160	Standard width	455.0	10.0	2.5	2.6	3.0	M1.6
20175177	Standard width	465.0	10.0	2.5	2.6	3.0	M1.6
20175184	Standard width	475.0	10.0	2.5	2.6	3.0	M1.6
20175191	Standard width	485.0	10.0	2.5	2.6	3.0	M1.6
20175207	Standard width	495.0	10.0	2.5	2.6	3.0	M1.6
20175214	Standard width	515.0	10.0	2.5	2.6	3.0	M1.6
20175221	Standard width	525.0	10.0	2.5	2.6	3.0	M1.6
20175238	Standard width	535.0	10.0	2.5	2.6	3.0	M1.6
20175245	Standard width	545.0	10.0	2.5	2.6	3.0	M1.6

Miniature Linear Rails



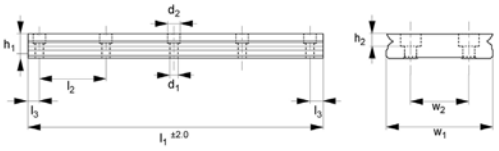



Part Number	Rail Type	l1	l2	l3	h1	w1	For screws
20175252	Standard width	555.0	10.0	2.5	2.6	3.0	M1.6
20175269	Standard width	565.0	10.0	2.5	2.6	3.0	M1.6
20175276	Standard width	575.0	10.0	2.5	2.6	3.0	M1.6
20175283	Standard width	585.0	10.0	2.5	2.6	3.0	M1.6
20175290	Standard width	595.0	10.0	2.5	2.6	3.0	M1.6
20175306	Standard width	605.0	10.0	2.5	2.6	3.0	M1.6
20175313	Standard width	615.0	10.0	2.5	2.6	3.0	M1.6
20175320	Standard width	625.0	10.0	2.5	2.6	3.0	M1.6
20175337	Standard width	635.0	10.0	2.5	2.6	3.0	M1.6
20175344	Standard width	645.0	10.0	2.5	2.6	3.0	M1.6
20175351	Standard width	655.0	10.0	2.5	2.6	3.0	M1.6
20175368	Standard width	665.0	10.0	2.5	2.6	3.0	M1.6
20175375	Standard width	675.0	10.0	2.5	2.6	3.0	M1.6
20175382	Standard width	685.0	10.0	2.5	2.6	3.0	M1.6
20175399	Standard width	695.0	10.0	2.5	2.6	3.0	M1.6
20175405	Standard width	705.0	10.0	2.5	2.6	3.0	M1.6
20175412	Standard width	715.0	10.0	2.5	2.6	3.0	M1.6
20175429	Standard width	725.0	10.0	2.5	2.6	3.0	M1.6
20175436	Standard width	735.0	10.0	2.5	2.6	3.0	M1.6
20175443	Standard width	745.0	10.0	2.5	2.6	3.0	M1.6
20175450	Standard width	755.0	10.0	2.5	2.6	3.0	M1.6
20175467	Standard width	765.0	10.0	2.5	2.6	3.0	M1.6
20175474	Standard width	775.0	10.0	2.5	2.6	3.0	M1.6
20175481	Standard width	785.0	10.0	2.5	2.6	3.0	M1.6
20175498	Standard width	795.0	10.0	2.5	2.6	3.0	M1.6
20175504	Standard width	805.0	10.0	2.5	2.6	3.0	M1.6

Miniature Linear Rails



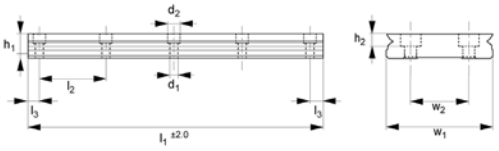



Part Number	Rail Type	l1	l2	l3	h1	w1	For screws
20175511	Standard width	815.0	10.0	2.5	2.6	3.0	M1.6
20175528	Standard width	825.0	10.0	2.5	2.6	3.0	M1.6
20175535	Standard width	835.0	10.0	2.5	2.6	3.0	M1.6
20175542	Standard width	845.0	10.0	2.5	2.6	3.0	M1.6
20175559	Standard width	855.0	10.0	2.5	2.6	3.0	M1.6
20175566	Standard width	865.0	10.0	2.5	2.6	3.0	M1.6
20175573	Standard width	875.0	10.0	2.5	2.6	3.0	M1.6
20175580	Standard width	885.0	10.0	2.5	2.6	3.0	M1.6
20175597	Standard width	895.0	10.0	2.5	2.6	3.0	M1.6
20175603	Standard width	905.0	10.0	2.5	2.6	3.0	M1.6
20175610	Standard width	915.0	10.0	2.5	2.6	3.0	M1.6
20175627	Standard width	925.0	10.0	2.5	2.6	3.0	M1.6
20175634	Standard width	935.0	10.0	2.5	2.6	3.0	M1.6
20175641	Standard width	945.0	10.0	2.5	2.6	3.0	M1.6
20175658	Standard width	955.0	10.0	2.5	2.6	3.0	M1.6
20175665	Standard width	965.0	10.0	2.5	2.6	3.0	M1.6
20175672	Standard width	975.0	10.0	2.5	2.6	3.0	M1.6
20175689	Standard width	985.0	10.0	2.5	2.6	3.0	M1.6
20175696	Standard width	995.0	10.0	2.5	2.6	3.0	M1.6
20173203	Standard width	40.0	15.0	5.0	3.5	5.0	M2
20173210	Standard width	55.0	15.0	5.0	3.5	5.0	M2
20173227	Standard width	70.0	15.0	5.0	3.5	5.0	M2
20173234	Standard width	85.0	15.0	5.0	3.5	5.0	M2
20173241	Standard width	100.0	15.0	5.0	3.5	5.0	M2
20173258	Standard width	115.0	15.0	5.0	3.5	5.0	M2
20173265	Standard width	130.0	15.0	5.0	3.5	5.0	M2

Miniature Linear Rails



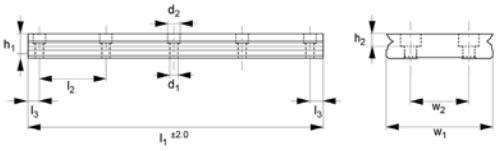



Part Number	Rail Type	l1	l2	l3	h1	w1	For screws
20173272	Standard width	145.0	15.0	5.0	3.5	5.0	M2
20173289	Standard width	160.0	15.0	5.0	3.5	5.0	M2
20173296	Standard width	175.0	15.0	5.0	3.5	5.0	M2
20173302	Standard width	190.0	15.0	5.0	3.5	5.0	M2
20169305	Standard width	205.0	15.0	5.0	3.5	5.0	M2
20173319	Standard width	220.0	15.0	5.0	3.5	5.0	M2
20173326	Standard width	235.0	15.0	5.0	3.5	5.0	M2
20173333	Standard width	250.0	15.0	5.0	3.5	5.0	M2
20173340	Standard width	265.0	15.0	5.0	3.5	5.0	M2
20173357	Standard width	280.0	15.0	5.0	3.5	5.0	M2
20173364	Standard width	295.0	15.0	5.0	3.5	5.0	M2
20173371	Standard width	310.0	15.0	5.0	3.5	5.0	M2
20173388	Standard width	325.0	15.0	5.0	3.5	5.0	M2
20173395	Standard width	340.0	15.0	5.0	3.5	5.0	M2
20173401	Standard width	355.0	15.0	5.0	3.5	5.0	M2
20173418	Standard width	370.0	15.0	5.0	3.5	5.0	M2
20173425	Standard width	385.0	15.0	5.0	3.5	5.0	M2
20173432	Standard width	400.0	15.0	5.0	3.5	5.0	M2
20173449	Standard width	415.0	15.0	5.0	3.5	5.0	M2
20173456	Standard width	430.0	15.0	5.0	3.5	5.0	M2
20173463	Standard width	445.0	15.0	5.0	3.5	5.0	M2
20173470	Standard width	460.0	15.0	5.0	3.5	5.0	M2
20173487	Standard width	475.0	15.0	5.0	3.5	5.0	M2
20173494	Standard width	490.0	15.0	5.0	3.5	5.0	M2
20173500	Standard width	505.0	15.0	5.0	3.5	5.0	M2
20173517	Standard width	520.0	15.0	5.0	3.5	5.0	M2

Miniature Linear Rails



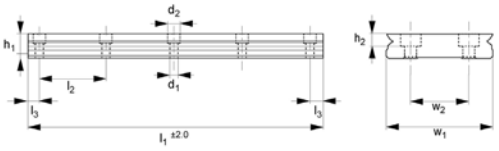



Part Number	Rail Type	l1	l2	l3	h1	w1	For screws
20173524	Standard width	535.0	15.0	5.0	3.5	5.0	M2
20173531	Standard width	550.0	15.0	5.0	3.5	5.0	M2
20173548	Standard width	565.0	15.0	5.0	3.5	5.0	M2
20173555	Standard width	580.0	15.0	5.0	3.5	5.0	M2
20173562	Standard width	595.0	15.0	5.0	3.5	5.0	M2
20173579	Standard width	610.0	15.0	5.0	3.5	5.0	M2
20173586	Standard width	625.0	15.0	5.0	3.5	5.0	M2
20173593	Standard width	640.0	15.0	5.0	3.5	5.0	M2
20173609	Standard width	655.0	15.0	5.0	3.5	5.0	M2
20173616	Standard width	670.0	15.0	5.0	3.5	5.0	M2
20173623	Standard width	685.0	15.0	5.0	3.5	5.0	M2
20173630	Standard width	700.0	15.0	5.0	3.5	5.0	M2
20173647	Standard width	715.0	15.0	5.0	3.5	5.0	M2
20173654	Standard width	730.0	15.0	5.0	3.5	5.0	M2
20173661	Standard width	745.0	15.0	5.0	3.5	5.0	M2
20173678	Standard width	760.0	15.0	5.0	3.5	5.0	M2
20173685	Standard width	775.0	15.0	5.0	3.5	5.0	M2
20173692	Standard width	790.0	15.0	5.0	3.5	5.0	M2
20173708	Standard width	805.0	15.0	5.0	3.5	5.0	M2
20173715	Standard width	820.0	15.0	5.0	3.5	5.0	M2
20173722	Standard width	835.0	15.0	5.0	3.5	5.0	M2
20173739	Standard width	850.0	15.0	5.0	3.5	5.0	M2
20173746	Standard width	865.0	15.0	5.0	3.5	5.0	M2
20173753	Standard width	880.0	15.0	5.0	3.5	5.0	M2
20173760	Standard width	895.0	15.0	5.0	3.5	5.0	M2
20173777	Standard width	910.0	15.0	5.0	3.5	5.0	M2

Miniature Linear Rails



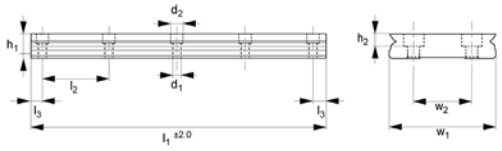



Part Number	Rail Type	l1	l2	l3	h1	w1	For screws
20173784	Standard width	925.0	15.0	5.0	3.5	5.0	M2
20173791	Standard width	940.0	15.0	5.0	3.5	5.0	M2
20173807	Standard width	955.0	15.0	5.0	3.5	5.0	M2
20173814	Standard width	970.0	15.0	5.0	3.5	5.0	M2
20173821	Standard width	985.0	15.0	5.0	3.5	5.0	M2
20173838	Standard width	1000.0	15.0	5.0	3.5	5.0	M2
20159351	Standard width	40.0	15.0	5.0	4.7	7.0	M2
20159368	Standard width	55.0	15.0	5.0	4.7	7.0	M2
20159375	Standard width	70.0	15.0	5.0	4.7	7.0	M2
20159382	Standard width	85.0	15.0	5.0	4.7	7.0	M2
20159399	Standard width	100.0	15.0	5.0	4.7	7.0	M2
20159405	Standard width	115.0	15.0	5.0	4.7	7.0	M2
20159412	Standard width	130.0	15.0	5.0	4.7	7.0	M2
20159429	Standard width	145.0	15.0	5.0	4.7	7.0	M2
20159436	Standard width	160.0	15.0	5.0	4.7	7.0	M2
20159443	Standard width	175.0	15.0	5.0	4.7	7.0	M2
20159450	Standard width	190.0	15.0	5.0	4.7	7.0	M2
20159467	Standard width	205.0	15.0	5.0	4.7	7.0	M2
20159474	Standard width	220.0	15.0	5.0	4.7	7.0	M2
20159481	Standard width	235.0	15.0	5.0	4.7	7.0	M2
20159498	Standard width	250.0	15.0	5.0	4.7	7.0	M2
20159504	Standard width	265.0	15.0	5.0	4.7	7.0	M2
20159511	Standard width	280.0	15.0	5.0	4.7	7.0	M2
20159528	Standard width	295.0	15.0	5.0	4.7	7.0	M2
20159535	Standard width	310.0	15.0	5.0	4.7	7.0	M2
20159542	Standard width	325.0	15.0	5.0	4.7	7.0	M2

Miniature Linear Rails



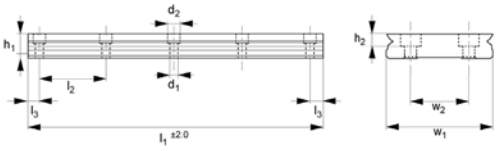



Part Number	Rail Type	l1	l2	l3	h1	w1	For screws
20159559	Standard width	340.0	15.0	5.0	4.7	7.0	M2
20159566	Standard width	355.0	15.0	5.0	4.7	7.0	M2
20159573	Standard width	370.0	15.0	5.0	4.7	7.0	M2
20159580	Standard width	385.0	15.0	5.0	4.7	7.0	M2
20159597	Standard width	400.0	15.0	5.0	4.7	7.0	M2
20159603	Standard width	415.0	15.0	5.0	4.7	7.0	M2
20159610	Standard width	430.0	15.0	5.0	4.7	7.0	M2
20159627	Standard width	445.0	15.0	5.0	4.7	7.0	M2
20159634	Standard width	460.0	15.0	5.0	4.7	7.0	M2
20159641	Standard width	475.0	15.0	5.0	4.7	7.0	M2
20159658	Standard width	490.0	15.0	5.0	4.7	7.0	M2
20159665	Standard width	505.0	15.0	5.0	4.7	7.0	M2
20159672	Standard width	520.0	15.0	5.0	4.7	7.0	M2
20159689	Standard width	535.0	15.0	5.0	4.7	7.0	M2
20159696	Standard width	550.0	15.0	5.0	4.7	7.0	M2
20159702	Standard width	565.0	15.0	5.0	4.7	7.0	M2
20159719	Standard width	580.0	15.0	5.0	4.7	7.0	M2
20159726	Standard width	595.0	15.0	5.0	4.7	7.0	M2
20159733	Standard width	610.0	15.0	5.0	4.7	7.0	M2
20159740	Standard width	625.0	15.0	5.0	4.7	7.0	M2
20159757	Standard width	640.0	15.0	5.0	4.7	7.0	M2
20159764	Standard width	655.0	15.0	5.0	4.7	7.0	M2
20159771	Standard width	670.0	15.0	5.0	4.7	7.0	M2
20159788	Standard width	685.0	15.0	5.0	4.7	7.0	M2
20159795	Standard width	700.0	15.0	5.0	4.7	7.0	M2
20159801	Standard width	715.0	15.0	5.0	4.7	7.0	M2

Miniature Linear Rails



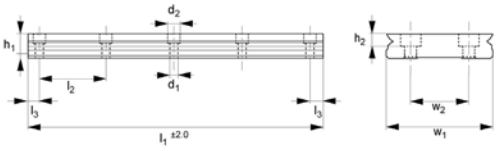



Part Number	Rail Type	l1	l2	l3	h1	w1	For screws
20159818	Standard width	730.0	15.0	5.0	4.7	7.0	M2
20159825	Standard width	745.0	15.0	5.0	4.7	7.0	M2
20159832	Standard width	760.0	15.0	5.0	4.7	7.0	M2
20159849	Standard width	775.0	15.0	5.0	4.7	7.0	M2
20159856	Standard width	790.0	15.0	5.0	4.7	7.0	M2
20159863	Standard width	805.0	15.0	5.0	4.7	7.0	M2
20159870	Standard width	820.0	15.0	5.0	4.7	7.0	M2
20159887	Standard width	835.0	15.0	5.0	4.7	7.0	M2
20159894	Standard width	850.0	15.0	5.0	4.7	7.0	M2
20159900	Standard width	865.0	15.0	5.0	4.7	7.0	M2
20159917	Standard width	880.0	15.0	5.0	4.7	7.0	M2
20159924	Standard width	895.0	15.0	5.0	4.7	7.0	M2
20159931	Standard width	910.0	15.0	5.0	4.7	7.0	M2
20159948	Standard width	925.0	15.0	5.0	4.7	7.0	M2
20159955	Standard width	940.0	15.0	5.0	4.7	7.0	M2
20159962	Standard width	955.0	15.0	5.0	4.7	7.0	M2
20159979	Standard width	970.0	15.0	5.0	4.7	7.0	M2
20159986	Standard width	985.0	15.0	5.0	4.7	7.0	M2
20159993	Standard width	1000.0	15.0	5.0	4.7	7.0	M2
20160005	Standard width	55.0	20.0	7.5	5.5	9.0	M3
20160012	Standard width	75.0	20.0	7.5	5.5	9.0	M3
20160029	Standard width	95.0	20.0	7.5	5.5	9.0	M3
20160036	Standard width	115.0	20.0	7.5	5.5	9.0	M3
20160043	Standard width	135.0	20.0	7.5	5.5	9.0	M3
20160050	Standard width	155.0	20.0	7.5	5.5	9.0	M3
20160067	Standard width	175.0	20.0	7.5	5.5	9.0	M3

Miniature Linear Rails

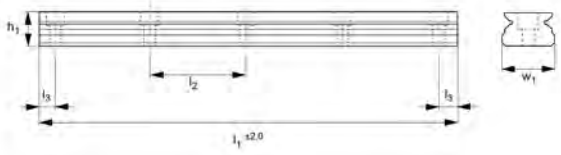

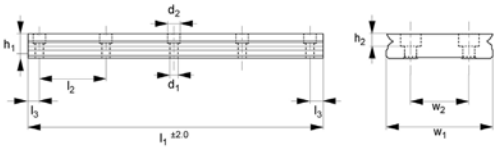



Part Number	Rail Type	l1	l2	l3	h1	w1	For screws
20160074	Standard width	195.0	20.0	7.5	5.5	9.0	M3
20160081	Standard width	215.0	20.0	7.5	5.5	9.0	M3
20160098	Standard width	235.0	20.0	7.5	5.5	9.0	M3
20160104	Standard width	255.0	20.0	7.5	5.5	9.0	M3
20160111	Standard width	275.0	20.0	7.5	5.5	9.0	M3
20160128	Standard width	295.0	20.0	7.5	5.5	9.0	M3
20160135	Standard width	315.0	20.0	7.5	5.5	9.0	M3
20160142	Standard width	335.0	20.0	7.5	5.5	9.0	M3
20160159	Standard width	355.0	20.0	7.5	5.5	9.0	M3
20160166	Standard width	375.0	20.0	7.5	5.5	9.0	M3
20160173	Standard width	395.0	20.0	7.5	5.5	9.0	M3
20160180	Standard width	415.0	20.0	7.5	5.5	9.0	M3
20160197	Standard width	435.0	20.0	7.5	5.5	9.0	M3
20160203	Standard width	455.0	20.0	7.5	5.5	9.0	M3
20160210	Standard width	475.0	20.0	7.5	5.5	9.0	M3
20160227	Standard width	495.0	20.0	7.5	5.5	9.0	M3
20160234	Standard width	515.0	20.0	7.5	5.5	9.0	M3
20160241	Standard width	535.0	20.0	7.5	5.5	9.0	M3
20160258	Standard width	555.0	20.0	7.5	5.5	9.0	M3
20160265	Standard width	575.0	20.0	7.5	5.5	9.0	M3
20160272	Standard width	595.0	20.0	7.5	5.5	9.0	M3
20160289	Standard width	615.0	20.0	7.5	5.5	9.0	M3
20160296	Standard width	635.0	20.0	7.5	5.5	9.0	M3
20160302	Standard width	655.0	20.0	7.5	5.5	9.0	M3
20160319	Standard width	675.0	20.0	7.5	5.5	9.0	M3
20160326	Standard width	695.0	20.0	7.5	5.5	9.0	M3

Miniature Linear Rails

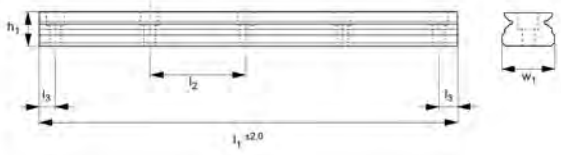

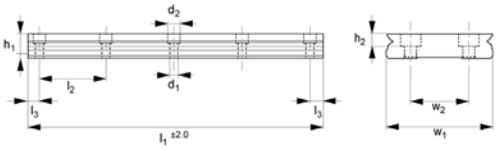



Part Number	Rail Type	l1	l2	l3	h1	w1	For screws
20160333	Standard width	715.0	20.0	7.5	5.5	9.0	M3
20160340	Standard width	735.0	20.0	7.5	5.5	9.0	M3
20160357	Standard width	755.0	20.0	7.5	5.5	9.0	M3
20160364	Standard width	775.0	20.0	7.5	5.5	9.0	M3
20160371	Standard width	795.0	20.0	7.5	5.5	9.0	M3
20160388	Standard width	815.0	20.0	7.5	5.5	9.0	M3
20160395	Standard width	835.0	20.0	7.5	5.5	9.0	M3
20160401	Standard width	855.0	20.0	7.5	5.5	9.0	M3
20160418	Standard width	875.0	20.0	7.5	5.5	9.0	M3
20160425	Standard width	895.0	20.0	7.5	5.5	9.0	M3
20160432	Standard width	915.0	20.0	7.5	5.5	9.0	M3
20160449	Standard width	935.0	20.0	7.5	5.5	9.0	M3
20160456	Standard width	955.0	20.0	7.5	5.5	9.0	M3
20160463	Standard width	975.0	20.0	7.5	5.5	9.0	M3
20160470	Standard width	995.0	20.0	7.5	5.5	9.0	M3
20160487	Standard width	70.0	25.0	10.0	7.5	12.0	M3
20160494	Standard width	95.0	25.0	10.0	7.5	12.0	M3
20160500	Standard width	120.0	25.0	10.0	7.5	12.0	M3
20160517	Standard width	145.0	25.0	10.0	7.5	12.0	M3
20160524	Standard width	170.0	25.0	10.0	7.5	12.0	M3
20160531	Standard width	195.0	25.0	10.0	7.5	12.0	M3
20160548	Standard width	220.0	25.0	10.0	7.5	12.0	M3
20160555	Standard width	245.0	25.0	10.0	7.5	12.0	M3
20160562	Standard width	270.0	25.0	10.0	7.5	12.0	M3
20160579	Standard width	295.0	25.0	10.0	7.5	12.0	M3
20160586	Standard width	320.0	25.0	10.0	7.5	12.0	M3

Miniature Linear Rails



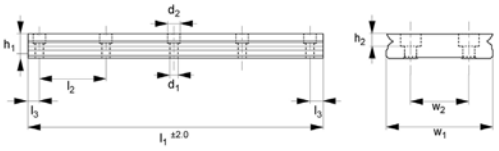



Part Number	Rail Type	l1	l2	l3	h1	w1	For screws
20160593	Standard width	345.0	25.0	10.0	7.5	12.0	M3
20160609	Standard width	370.0	25.0	10.0	7.5	12.0	M3
20160616	Standard width	395.0	25.0	10.0	7.5	12.0	M3
20160623	Standard width	420.0	25.0	10.0	7.5	12.0	M3
20160630	Standard width	445.0	25.0	10.0	7.5	12.0	M3
20160647	Standard width	470.0	25.0	10.0	7.5	12.0	M3
20160654	Standard width	495.0	25.0	10.0	7.5	12.0	M3
20160661	Standard width	520.0	25.0	10.0	7.5	12.0	M3
20160678	Standard width	545.0	25.0	10.0	7.5	12.0	M3
20160685	Standard width	570.0	25.0	10.0	7.5	12.0	M3
20160692	Standard width	595.0	25.0	10.0	7.5	12.0	M3
20160708	Standard width	620.0	25.0	10.0	7.5	12.0	M3
20160715	Standard width	645.0	25.0	10.0	7.5	12.0	M3
20160722	Standard width	670.0	25.0	10.0	7.5	12.0	M3
20160739	Standard width	695.0	25.0	10.0	7.5	12.0	M3
20160746	Standard width	720.0	25.0	10.0	7.5	12.0	M3
20160753	Standard width	745.0	25.0	10.0	7.5	12.0	M3
20160760	Standard width	770.0	25.0	10.0	7.5	12.0	M3
20160777	Standard width	795.0	25.0	10.0	7.5	12.0	M3
20160784	Standard width	820.0	25.0	10.0	7.5	12.0	M3
20160791	Standard width	845.0	25.0	10.0	7.5	12.0	M3
20160807	Standard width	870.0	25.0	10.0	7.5	12.0	M3
20160814	Standard width	895.0	25.0	10.0	7.5	12.0	M3
20160821	Standard width	920.0	25.0	10.0	7.5	12.0	M3
20160838	Standard width	945.0	25.0	10.0	7.5	12.0	M3
20160845	Standard width	970.0	25.0	10.0	7.5	12.0	M3

Miniature Linear Rails

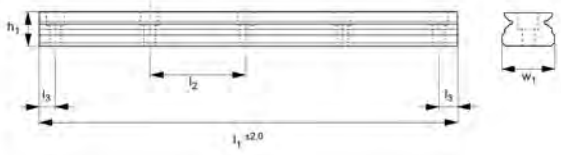

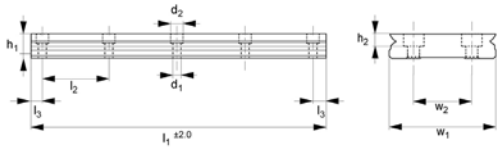



Part Number	Rail Type	l1	l2	l3	h1	w1	For screws
20160852	Standard width	995.0	25.0	10.0	7.5	12.0	M3
20160869	Standard width	70.0	40.0	15.0	9.5	15.0	M3
20160876	Standard width	110.0	40.0	15.0	9.5	15.0	M3
20160883	Standard width	150.0	40.0	15.0	9.5	15.0	M3
20160890	Standard width	190.0	40.0	15.0	9.5	15.0	M3
20160906	Standard width	230.0	40.0	15.0	9.5	15.0	M3
20160913	Standard width	270.0	40.0	15.0	9.5	15.0	M3
20160920	Standard width	310.0	40.0	15.0	9.5	15.0	M3
20160937	Standard width	350.0	40.0	15.0	9.5	15.0	M3
20160944	Standard width	390.0	40.0	15.0	9.5	15.0	M3
20160951	Standard width	430.0	40.0	15.0	9.5	15.0	M3
20160968	Standard width	470.0	40.0	15.0	9.5	15.0	M3
20160975	Standard width	510.0	40.0	15.0	9.5	15.0	M3
20160982	Standard width	550.0	40.0	15.0	9.5	15.0	M3
20160999	Standard width	590.0	40.0	15.0	9.5	15.0	M3
20161002	Standard width	630.0	40.0	15.0	9.5	15.0	M3
20161019	Standard width	670.0	40.0	15.0	9.5	15.0	M3
20161026	Standard width	710.0	40.0	15.0	9.5	15.0	M3
20161033	Standard width	750.0	40.0	15.0	9.5	15.0	M3
20161040	Standard width	790.0	40.0	15.0	9.5	15.0	M3
20161057	Standard width	830.0	40.0	15.0	9.5	15.0	M3
20161064	Standard width	870.0	40.0	15.0	9.5	15.0	M3
20161071	Standard width	910.0	40.0	15.0	9.5	15.0	M3
20161088	Standard width	950.0	40.0	15.0	9.5	15.0	M3
20161095	Standard width	990.0	40.0	15.0	9.5	15.0	M3
20173845	Wide version	55.0	20.0	7.5	4.0	10.0	M2.5

Miniature Linear Rails



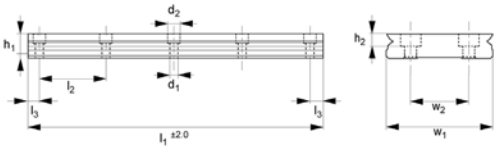



Part Number	Rail Type	l1	l2	l3	h1	w1	For screws
20174132	Wide version	75.0	20.0	7.5	4.0	10.0	M2.5
20174149	Wide version	95.0	20.0	7.5	4.0	10.0	M2.5
20173852	Wide version	115.0	20.0	7.5	4.0	10.0	M2.5
20174156	Wide version	135.0	20.0	7.5	4.0	10.0	M2.5
20175702	Wide version	155.0	20.0	7.5	4.0	10.0	M2.5
20173869	Wide version	175.0	20.0	7.5	4.0	10.0	M2.5
20174163	Wide version	195.0	20.0	7.5	4.0	10.0	M2.5
20174170	Wide version	215.0	20.0	7.5	4.0	10.0	M2.5
20173876	Wide version	235.0	20.0	7.5	4.0	10.0	M2.5
20174187	Wide version	255.0	20.0	7.5	4.0	10.0	M2.5
20174194	Wide version	275.0	20.0	7.5	4.0	10.0	M2.5
20173883	Wide version	295.0	20.0	7.5	4.0	10.0	M2.5
20174200	Wide version	315.0	20.0	7.5	4.0	10.0	M2.5
20174217	Wide version	335.0	20.0	7.5	4.0	10.0	M2.5
20173890	Wide version	355.0	20.0	7.5	4.0	10.0	M2.5
20174224	Wide version	375.0	20.0	7.5	4.0	10.0	M2.5
20174231	Wide version	395.0	20.0	7.5	4.0	10.0	M2.5
20173906	Wide version	415.0	20.0	7.5	4.0	10.0	M2.5
20174248	Wide version	435.0	20.0	7.5	4.0	10.0	M2.5
20174255	Wide version	455.0	20.0	7.5	4.0	10.0	M2.5
20173913	Wide version	475.0	20.0	7.5	4.0	10.0	M2.5
20174262	Wide version	495.0	20.0	7.5	4.0	10.0	M2.5
20174279	Wide version	515.0	20.0	7.5	4.0	10.0	M2.5
20173920	Wide version	535.0	20.0	7.5	4.0	10.0	M2.5
20174286	Wide version	555.0	20.0	7.5	4.0	10.0	M2.5
20174293	Wide version	575.0	20.0	7.5	4.0	10.0	M2.5

Miniature Linear Rails



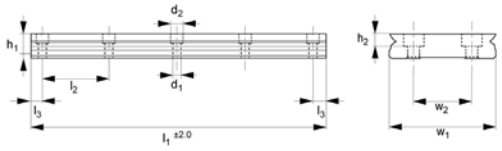



Part Number	Rail Type	l1	l2	l3	h1	w1	For screws
20173937	Wide version	595.0	20.0	7.5	4.0	10.0	M2.5
20174309	Wide version	615.0	20.0	7.5	4.0	10.0	M2.5
20174316	Wide version	635.0	20.0	7.5	4.0	10.0	M2.5
20173944	Wide version	655.0	20.0	7.5	4.0	10.0	M2.5
20174323	Wide version	675.0	20.0	7.5	4.0	10.0	M2.5
20174330	Wide version	695.0	20.0	7.5	4.0	10.0	M2.5
20173951	Wide version	715.0	20.0	7.5	4.0	10.0	M2.5
20174347	Wide version	735.0	20.0	7.5	4.0	10.0	M2.5
20174354	Wide version	755.0	20.0	7.5	4.0	10.0	M2.5
20173968	Wide version	775.0	20.0	7.5	4.0	10.0	M2.5
20174361	Wide version	795.0	20.0	7.5	4.0	10.0	M2.5
20174378	Wide version	815.0	20.0	7.5	4.0	10.0	M2.5
20173975	Wide version	835.0	20.0	7.5	4.0	10.0	M2.5
20174385	Wide version	855.0	20.0	7.5	4.0	10.0	M2.5
20174392	Wide version	875.0	20.0	7.5	4.0	10.0	M2.5
20173982	Wide version	895.0	20.0	7.5	4.0	10.0	M2.5
20174408	Wide version	915.0	20.0	7.5	4.0	10.0	M2.5
20174415	Wide version	935.0	20.0	7.5	4.0	10.0	M2.5
20173999	Wide version	955.0	20.0	7.5	4.0	10.0	M2.5
20174422	Wide version	975.0	20.0	7.5	4.0	10.0	M2.5
20174439	Wide version	50.0	30.0	10.0	5.2	14.0	M3
20174446	Wide version	80.0	30.0	10.0	5.2	14.0	M3
20174453	Wide version	110.0	30.0	10.0	5.2	14.0	M3
20174460	Wide version	140.0	30.0	10.0	5.2	14.0	M3
20174477	Wide version	170.0	30.0	10.0	5.2	14.0	M3
20174484	Wide version	200.0	30.0	10.0	5.2	14.0	M3

Miniature Linear Rails



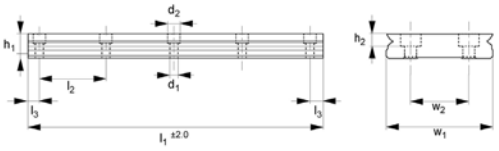



Part Number	Rail Type	l1	l2	l3	h1	w1	For screws
20174491	Wide version	230.0	30.0	10.0	5.2	14.0	M3
20174507	Wide version	260.0	30.0	10.0	5.2	14.0	M3
20174514	Wide version	290.0	30.0	10.0	5.2	14.0	M3
20162443	Wide version	320.0	30.0	10.0	5.2	14.0	M3
20174521	Wide version	350.0	30.0	10.0	5.2	14.0	M3
20174538	Wide version	380.0	30.0	10.0	5.2	14.0	M3
20174545	Wide version	410.0	30.0	10.0	5.2	14.0	M3
20174552	Wide version	440.0	30.0	10.0	5.2	14.0	M3
20174569	Wide version	470.0	30.0	10.0	5.2	14.0	M3
20174576	Wide version	500.0	30.0	10.0	5.2	14.0	M3
20174583	Wide version	530.0	30.0	10.0	5.2	14.0	M3
20174590	Wide version	560.0	30.0	10.0	5.2	14.0	M3
20174606	Wide version	590.0	30.0	10.0	5.2	14.0	M3
20174613	Wide version	620.0	30.0	10.0	5.2	14.0	M3
20174620	Wide version	650.0	30.0	10.0	5.2	14.0	M3
20174637	Wide version	680.0	30.0	10.0	5.2	14.0	M3
20174644	Wide version	710.0	30.0	10.0	5.2	14.0	M3
20174651	Wide version	740.0	30.0	10.0	5.2	14.0	M3
20174668	Wide version	770.0	30.0	10.0	5.2	14.0	M3
20174675	Wide version	800.0	30.0	10.0	5.2	14.0	M3
20174682	Wide version	830.0	30.0	10.0	5.2	14.0	M3
20174699	Wide version	860.0	30.0	10.0	5.2	14.0	M3
20174705	Wide version	890.0	30.0	10.0	5.2	14.0	M3
20174712	Wide version	920.0	30.0	10.0	5.2	14.0	M3
20174729	Wide version	950.0	30.0	10.0	5.2	14.0	M3
20174736	Wide version	980.0	30.0	10.0	5.2	14.0	M3

Miniature Linear Rails



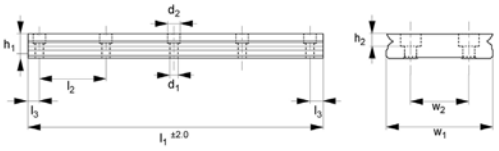



Part Number	Rail Type	l1	l2	l3	h1	w1	For screws
20161101	Wide version	50.0	30.0	10.0	7.3	18.0	M3
20161118	Wide version	80.0	30.0	10.0	7.3	18.0	M3
20161873	Wide version	110.0	30.0	10.0	7.3	18.0	M3
20161125	Wide version	140.0	30.0	10.0	7.3	18.0	M3
20161132	Wide version	170.0	30.0	10.0	7.3	18.0	M3
20161149	Wide version	200.0	30.0	10.0	7.3	18.0	M3
20161156	Wide version	230.0	30.0	10.0	7.3	18.0	M3
20161163	Wide version	260.0	30.0	10.0	7.3	18.0	M3
20161170	Wide version	290.0	30.0	10.0	7.3	18.0	M3
20161187	Wide version	320.0	30.0	10.0	7.3	18.0	M3
20161194	Wide version	350.0	30.0	10.0	7.3	18.0	M3
20161200	Wide version	380.0	30.0	10.0	7.3	18.0	M3
20161217	Wide version	410.0	30.0	10.0	7.3	18.0	M3
20161224	Wide version	440.0	30.0	10.0	7.3	18.0	M3
20161231	Wide version	470.0	30.0	10.0	7.3	18.0	M3
20161248	Wide version	500.0	30.0	10.0	7.3	18.0	M3
20161255	Wide version	530.0	30.0	10.0	7.3	18.0	M3
20161262	Wide version	560.0	30.0	10.0	7.3	18.0	M3
20161279	Wide version	590.0	30.0	10.0	7.3	18.0	M3
20161286	Wide version	620.0	30.0	10.0	7.3	18.0	M3
20161293	Wide version	650.0	30.0	10.0	7.3	18.0	M3
20161309	Wide version	680.0	30.0	10.0	7.3	18.0	M3
20161316	Wide version	710.0	30.0	10.0	7.3	18.0	M3
20161323	Wide version	740.0	30.0	10.0	7.3	18.0	M3
20161330	Wide version	770.0	30.0	10.0	7.3	18.0	M3
20161347	Wide version	800.0	30.0	10.0	7.3	18.0	M3

Miniature Linear Rails

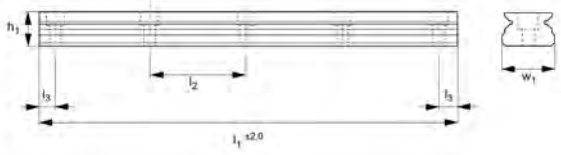

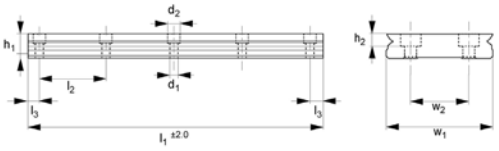



Part Number	Rail Type	l1	l2	l3	h1	w1	For screws
20161354	Wide version	830.0	30.0	10.0	7.3	18.0	M3
20161361	Wide version	860.0	30.0	10.0	7.3	18.0	M3
20161378	Wide version	890.0	30.0	10.0	7.3	18.0	M3
20161385	Wide version	920.0	30.0	10.0	7.3	18.0	M3
20161392	Wide version	950.0	30.0	10.0	7.3	18.0	M3
20161408	Wide version	980.0	30.0	10.0	7.3	18.0	M3
20161415	Wide version	70.0	40.0	15.0	8.5	24.0	M4
20161422	Wide version	110.0	40.0	15.0	8.5	24.0	M4
20161439	Wide version	150.0	40.0	15.0	8.5	24.0	M4
20161446	Wide version	190.0	40.0	15.0	8.5	24.0	M4
20161453	Wide version	230.0	40.0	15.0	8.5	24.0	M4
20161460	Wide version	270.0	40.0	15.0	8.5	24.0	M4
20161477	Wide version	310.0	40.0	15.0	8.5	24.0	M4
20161484	Wide version	350.0	40.0	15.0	8.5	24.0	M4
20161491	Wide version	390.0	40.0	15.0	8.5	24.0	M4
20161507	Wide version	430.0	40.0	15.0	8.5	24.0	M4
20161514	Wide version	470.0	40.0	15.0	8.5	24.0	M4
20161521	Wide version	510.0	40.0	15.0	8.5	24.0	M4
20161538	Wide version	550.0	40.0	15.0	8.5	24.0	M4
20161545	Wide version	590.0	40.0	15.0	8.5	24.0	M4
20161552	Wide version	630.0	40.0	15.0	8.5	24.0	M4
20161569	Wide version	670.0	40.0	15.0	8.5	24.0	M4
20161576	Wide version	710.0	40.0	15.0	8.5	24.0	M4
20161583	Wide version	750.0	40.0	15.0	8.5	24.0	M4
20161590	Wide version	790.0	40.0	15.0	8.5	24.0	M4
20161606	Wide version	830.0	40.0	15.0	8.5	24.0	M4

Miniature Linear Rails

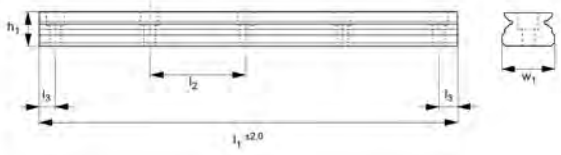

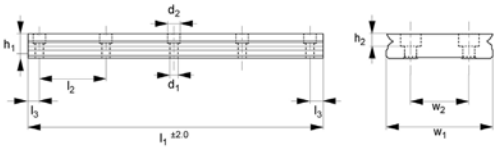



Part Number	Rail Type	l1	l2	l3	h1	w1	For screws
20161613	Wide version	870.0	40.0	15.0	8.5	24.0	M4
20161620	Wide version	910.0	40.0	15.0	8.5	24.0	M4
20161637	Wide version	950.0	40.0	15.0	8.5	24.0	M4
20161644	Wide version	990.0	40.0	15.0	8.5	24.0	M4
20161651	Wide version	110.0	40.0	15.0	9.5	42.0	M4
20161668	Wide version	150.0	40.0	15.0	9.5	42.0	M4
20161675	Wide version	190.0	40.0	15.0	9.5	42.0	M4
20161682	Wide version	230.0	40.0	15.0	9.5	42.0	M4
20161699	Wide version	270.0	40.0	15.0	9.5	42.0	M4
20161705	Wide version	310.0	40.0	15.0	9.5	42.0	M4
20159191	Wide version	350.0	40.0	15.0	9.5	42.0	M4
20161712	Wide version	390.0	40.0	15.0	9.5	42.0	M4
20161729	Wide version	430.0	40.0	15.0	9.5	42.0	M4
20161736	Wide version	470.0	40.0	15.0	9.5	42.0	M4
20161743	Wide version	510.0	40.0	15.0	9.5	42.0	M4
20161750	Wide version	550.0	40.0	15.0	9.5	42.0	M4
20161767	Wide version	590.0	40.0	15.0	9.5	42.0	M4
20161774	Wide version	630.0	40.0	15.0	9.5	42.0	M4
20161781	Wide version	670.0	40.0	15.0	9.5	42.0	M4
20161798	Wide version	710.0	40.0	15.0	9.5	42.0	M4
20161804	Wide version	750.0	40.0	15.0	9.5	42.0	M4
20161811	Wide version	790.0	40.0	15.0	9.5	42.0	M4
20161828	Wide version	830.0	40.0	15.0	9.5	42.0	M4
20161835	Wide version	870.0	40.0	15.0	9.5	42.0	M4
20161842	Wide version	910.0	40.0	15.0	9.5	42.0	M4
20161859	Wide version	950.0	40.0	15.0	9.5	42.0	M4
20161866	Wide version	990.0	40.0	15.0	9.5	42.0	M4

Miniature Rail Carriages

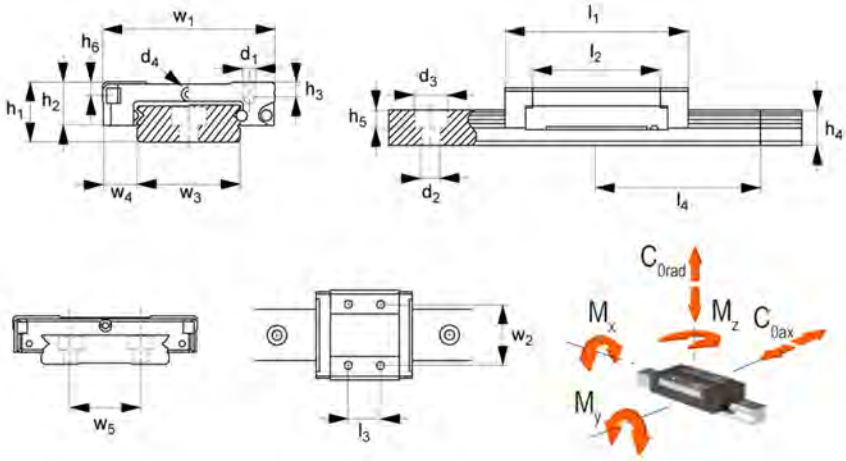



Features

- It moves smoothly and feature a low coefficient of friction and break-away forces.
- The rails' 45 contact gothic arch design guarantees similar load capabilities in all directions.
- It is capable of withstanding temperatures between -40C and +80C.

Specifications

Material: Stainless Steel

These miniature rail carriages are a compact and versatile solution for achieving precise linear motion in small-scale applications. They're perfect for applications that need accurate placement and fluid movement in constrained places due to their small size, or applications requiring corrosion resistance as they are made from stainless steel.

The rails' 45 contact gothic arch design guarantees similar load capabilities in all directions. These rails move smoothly and feature a low coefficient of friction and break-away forces. It can sustain large weights, is resistant to corrosion, and is resilient to wear and tear.

Carriages come with a plastic dummy rail. It should be mounted by putting the dummy rail up against the end of the real rail and sliding it from one to the other. It is capable of withstanding temperatures between -40C and +80C. Used in different applications, including medical devices, pharmaceuticals, small automation systems, and optical equipment.

Miniature Rail Carriages

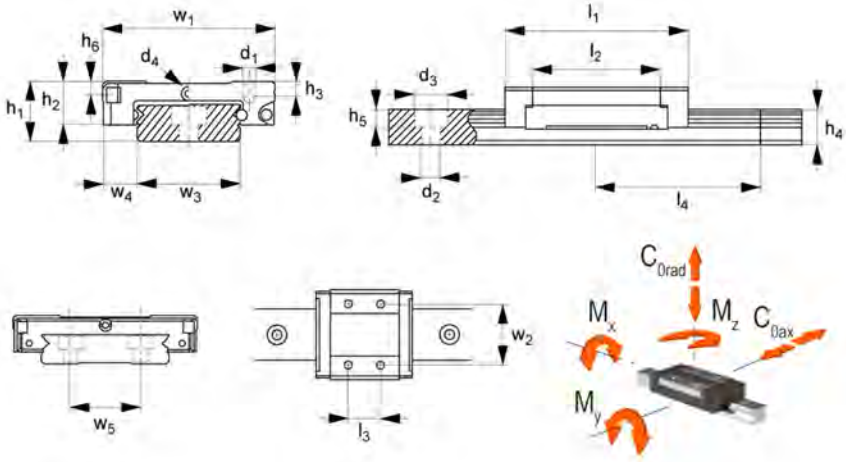



Part Number	Carriage Style	For rail	l1	l2	l3	l4	h1
20159177	Standard	3.0	11.7	6.8	3.5	10.0	4.0
20159184	Standard	3.0	16.0	11.0	5.5	10.0	4.0
20158491	Standard	3.0	16.0	10.0		15.0	6.0
20158439	Standard	3.0	19.6	13.5	7.0	15.0	6.0
20158330	Standard	7.0	23.7	14.3	8.0	15.0	8.0
20158446	Standard	7.0	31.2	21.8	13.0	15.0	8.0
20158347	Standard	9.0	30.6	20.5	10.0	20.0	10.0
20159146	Standard	9.0	40.9	30.8	16.0	20.0	10.0
20158354	Standard	12.0	35.4	22.0	15.0	25.0	13.0
20158408	Standard	12.0	47.6	34.0	20.0	25.0	13.0
20158361	Standard	15.0	43.0	27.0	20.0	40.0	16.0
20158422	Standard	15.0	60.0	44.0	25.0	40.0	16.0
20159153	Wide	10.0	21.1	15.1	6.5	20.0	6.5
20159160	Wide	10.0	27.2	21.2	11.0	20.0	6.5
20158460	Wide	14.0	31.6	21.2	10.0	30.0	9.0
20158477	Wide	14.0	40.5	30.1	19.0	30.0	9.0
20158378	Wide	18.0	39.1	27.9	12.0	30.0	12.0
20158453	Wide	18.0	50.7	39.5	24.0	30.0	12.0
20158385	Wide	24.0	44.4	31.0	15.0	40.0	14.0
20158415	Wide	24.0	59.4	46.0	28.0	40.0	14.0
20158392	Wide	42.0	55.3	38.5	20.0	40.0	16.0
20158484	Wide	42.0	74.4	57.6	35.0	40.0	16.0

Manual Clamps for Miniature Rail

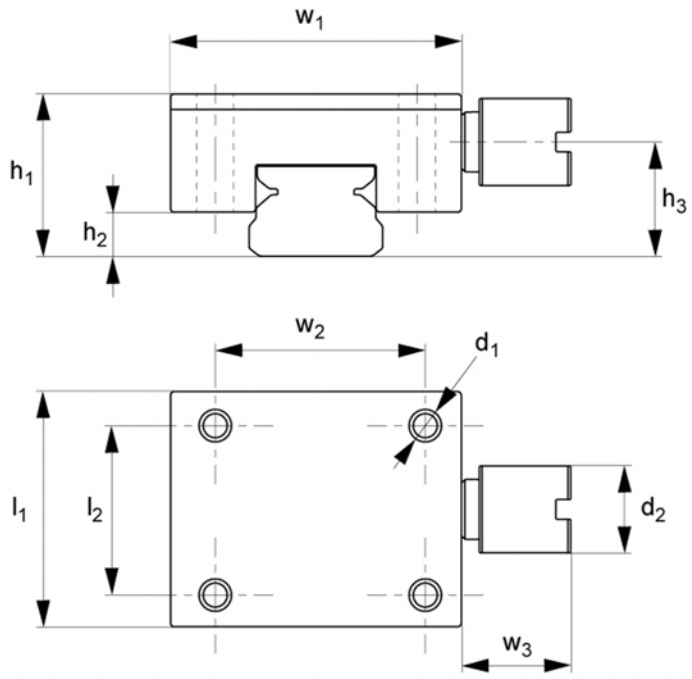

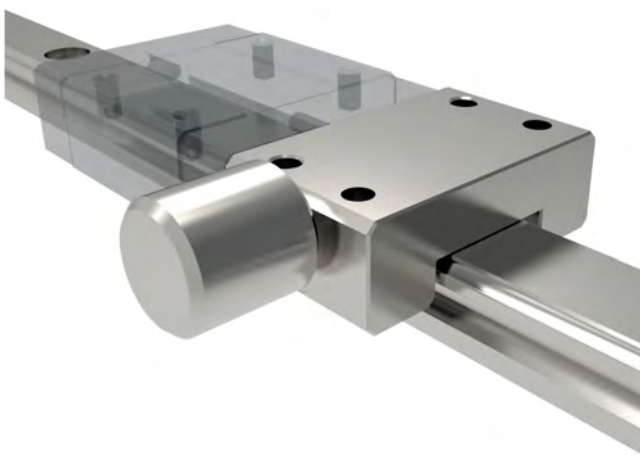

Features

- A compact and lightweight form makes it perfect for use with miniature rail systems where space is restricted.
- Equipped with a lever or handle mechanism that allows for exact clamping force adjustment.
- Used for medical devices, pharmaceuticals, small automation systems, and optical equipment.

Specifications

Material: Stainless Steel

These manual rail clamps are used in conjunction with rail carriages. When the clamping knob is turned, the clamp contact surfaces press against the rail, clamping it in place. Their compact and lightweight form makes them perfect for use with miniature rail systems where space is restricted.

These clamps are equipped with a lever or handle mechanism that allows for exact clamping force adjustment. This keeps the small rails securely in place without causing damage or deformation. The rails move smoothly and feature a low coefficient of friction and break-away forces.

It can withstand heavy loads, is corrosion resistant, and is resistant to wear and tear. Used in different applications, including medical devices, pharmaceuticals, small automation systems, and optical equipment.

Manual Clamps for Miniature Rail

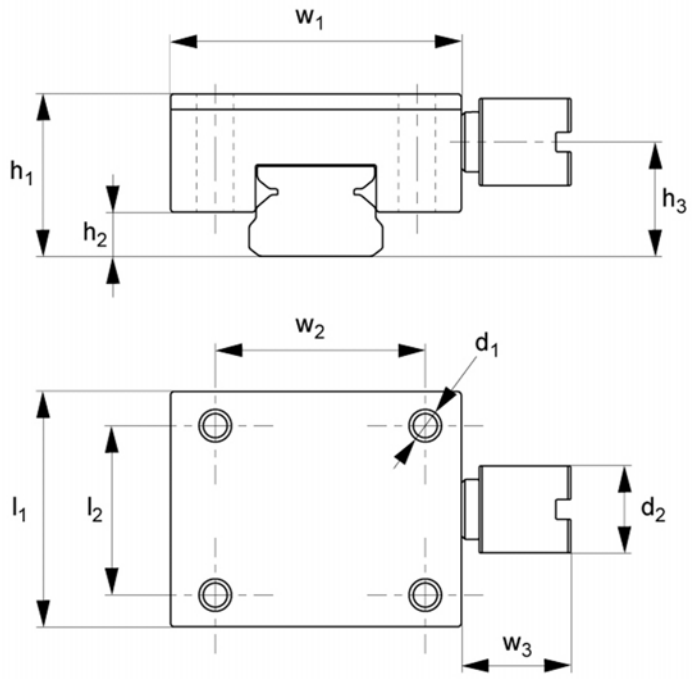

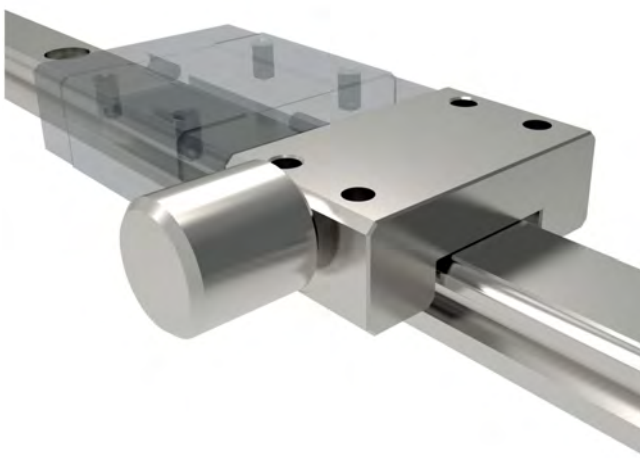

Part Number	h1	l1	w1	h2	h3	l2	w2
20175870	8.0	12.0	17.0	2.0	4.3	8.0	12.0
20175856	10.0	17.0	20.0	2.7	5.35	11.0	15.0
20175887	13.0	19.0	27.0	3.5	7.15	13.0	20.0
20175894	16.0	20.0	32.0	5.0	8.05	14.0	25.0
20175900	9.0	12.0	25.0	3.0	4.3	8.0	19.0
20175917	12.0	17.0	30.0	4.2	5.85	11.0	23.0
20175924	14.0	19.0	40.0	4.0	7.65	13.0	30.0
20175931	16.0	22.0	60.0	4.5	8.55	15.0	45.0

Aluminium Linear Guide Rails

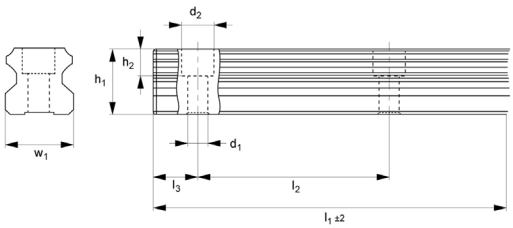

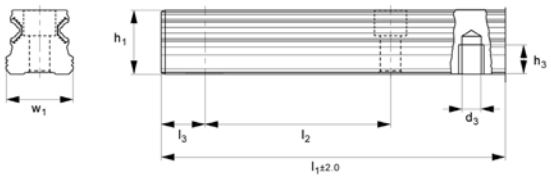



Features

- It enables precise and accurate linear movement.
- Made up of a base rail, a slider block, and rolling parts.
- It can sustain dynamic loads while accounting for impact, vibration, and fatigue.

Specifications

Material: Aluminium

These Aluminium Linear Guide Rails are a form of linear motion bearing that enables precise and accurate linear movement. They are normally made up of a base rail, a slider block, and rolling parts. The base rail is through hardened on which the rolling components travel and the slider block holds the rolling elements and is coupled to the moving item.

These rails are used in applications requiring high accuracy, low friction and smooth moveements. It can sustain dynamic loads while accounting for impact, vibration, corrosion resistance and fatigue.

In general, the carriages will be delivered to the tracks individually. To put the carriage onto the tracks, bring it up to the rails and slide it onto the rail. It is widely used in high-load and accurate applications throughout the industry, including medical devices, semiconductor production equipment, and industrial automation equipment.

Aluminium Linear Guide Rails

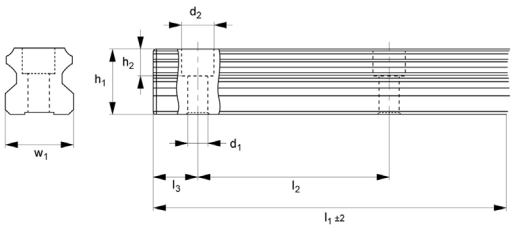

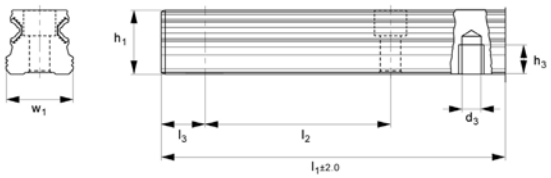



Part Number	Rail Type	Rail size	l1	h1	w1	l3
20169336	Standard	15.0	180.0	14.0	15.0	28.0
20171261	Rear Fixing	15.0	180.0	14.3	15.0	28.0
20169343	Standard	15.0	240.0	14.0	15.0	28.0
20171278	Rear Fixing	15.0	240.0	14.3	15.0	28.0
20169350	Standard	15.0	300.0	14.0	15.0	28.0
20171285	Rear Fixing	15.0	300.0	14.3	15.0	28.0
20169367	Standard	15.0	360.0	14.0	15.0	28.0
20171292	Rear Fixing	15.0	360.0	14.3	15.0	28.0
20169374	Standard	15.0	420.0	14.0	15.0	28.0
20171308	Rear Fixing	15.0	420.0	14.3	15.0	28.0
20169381	Standard	15.0	480.0	14.0	15.0	28.0
20171315	Rear Fixing	15.0	480.0	14.3	15.0	28.0
20169398	Standard	15.0	540.0	14.0	15.0	28.0
20171322	Rear Fixing	15.0	540.0	14.3	15.0	28.0
20169404	Standard	15.0	600.0	14.0	15.0	28.0
20171339	Rear Fixing	15.0	600.0	14.3	15.0	28.0
20169411	Standard	15.0	660.0	14.0	15.0	28.0
20171346	Rear Fixing	15.0	660.0	14.3	15.0	28.0
20169428	Standard	15.0	720.0	14.0	15.0	28.0
20171353	Rear Fixing	15.0	720.0	14.3	15.0	28.0
20169435	Standard	15.0	780.0	14.0	15.0	28.0

Aluminium Linear Guide Rails

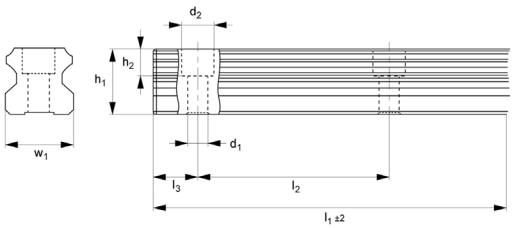

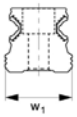

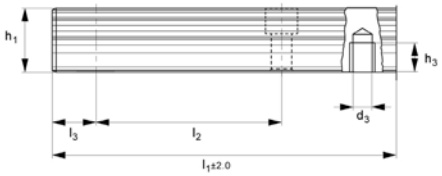



Part Number	Rail Type	Rail size	l1	h1	w1	l3
20171360	Rear Fixing	15.0	780.0	14.3	15.0	28.0
20169442	Standard	15.0	840.0	14.0	15.0	28.0
20171377	Rear Fixing	15.0	840.0	14.3	15.0	28.0
20169459	Standard	15.0	900.0	14.0	15.0	28.0
20171384	Rear Fixing	15.0	900.0	14.3	15.0	28.0
20169466	Standard	15.0	960.0	14.0	15.0	28.0
20171391	Rear Fixing	15.0	960.0	14.3	15.0	28.0
20169473	Standard	15.0	1020.0	14.0	15.0	28.0
20171407	Rear Fixing	15.0	1020.0	14.3	15.0	28.0
20169480	Standard	15.0	1080.0	14.0	15.0	28.0
20171414	Rear Fixing	15.0	1080.0	14.3	15.0	28.0
20169497	Standard	15.0	1140.0	14.0	15.0	28.0
20171421	Rear Fixing	15.0	1140.0	14.3	15.0	28.0
20169503	Standard	15.0	1200.0	14.0	15.0	28.0
20171438	Rear Fixing	15.0	1200.0	14.3	15.0	28.0
20169510	Standard	15.0	1260.0	14.0	15.0	28.0
20171445	Rear Fixing	15.0	1260.0	14.3	15.0	28.0
20169527	Standard	15.0	1320.0	14.0	15.0	28.0
20171452	Rear Fixing	15.0	1320.0	14.3	15.0	28.0
20169534	Standard	15.0	1380.0	14.0	15.0	28.0
20171469	Rear Fixing	15.0	1380.0	14.3	15.0	28.0

Aluminium Linear Guide Rails

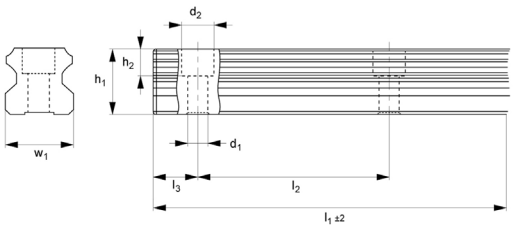

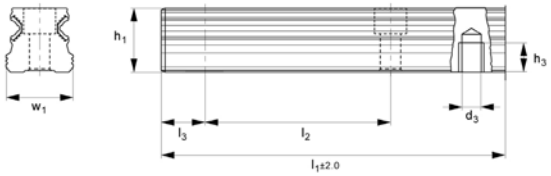



Part Number	Rail Type	Rail size	l1	h1	w1	l3
20169541	Standard	15.0	1440.0	14.0	15.0	28.0
20171476	Rear Fixing	15.0	1440.0	14.3	15.0	28.0
20169558	Standard	15.0	1550.0	14.0	15.0	28.0
20171483	Rear Fixing	15.0	1550.0	14.3	15.0	28.0
20169565	Standard	15.0	1560.0	14.0	15.0	28.0
20171490	Rear Fixing	15.0	1560.0	14.3	15.0	28.0
20169572	Standard	15.0	1620.0	14.0	15.0	28.0
20171506	Rear Fixing	15.0	1620.0	14.3	15.0	28.0
20169589	Standard	15.0	1680.0	14.0	15.0	28.0
20171513	Rear Fixing	15.0	1680.0	14.3	15.0	28.0
20169596	Standard	15.0	1740.0	14.0	15.0	28.0
20171520	Rear Fixing	15.0	1740.0	14.3	15.0	28.0
20169602	Standard	15.0	1800.0	14.0	15.0	28.0
20171537	Rear Fixing	15.0	1800.0	14.3	15.0	28.0
20169619	Standard	15.0	1860.0	14.0	15.0	28.0
20171544	Rear Fixing	15.0	1860.0	14.3	15.0	28.0
20169626	Standard	15.0	1920.0	14.0	15.0	28.0
20169633	Standard	15.0	1980.0	14.0	15.0	28.0
20171551	Rear Fixing	15.0	1980.0	14.3	15.0	28.0
20169640	Standard	15.0	2040.0	14.0	15.0	28.0
20171568	Rear Fixing	15.0	2040.0	14.3	15.0	28.0

Aluminium Linear Guide Rails

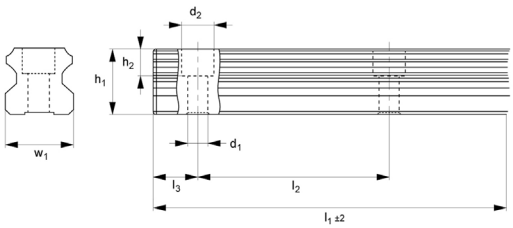

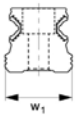

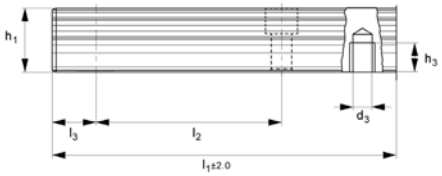



Part Number	Rail Type	Rail size	l1	h1	w1	l3
20169657	Standard	15.0	2100.0	14.0	15.0	28.0
20171575	Rear Fixing	15.0	2100.0	14.3	15.0	28.0
20169664	Standard	15.0	2160.0	14.0	15.0	28.0
20171582	Rear Fixing	15.0	2160.0	14.3	15.0	28.0
20169671	Standard	15.0	2220.0	14.0	15.0	28.0
20171599	Rear Fixing	15.0	2220.0	14.3	15.0	28.0
20169688	Standard	15.0	2280.0	14.0	15.0	28.0
20171605	Rear Fixing	15.0	2280.0	14.3	15.0	28.0
20169695	Standard	15.0	2340.0	14.0	15.0	28.0
20171612	Rear Fixing	15.0	2340.0	14.3	15.0	28.0
20169701	Standard	15.0	2400.0	14.0	15.0	28.0
20171629	Rear Fixing	15.0	2400.0	14.3	15.0	28.0
20169718	Standard	15.0	2460.0	14.0	15.0	28.0
20171636	Rear Fixing	15.0	2460.0	14.3	15.0	28.0
20169725	Standard	15.0	2520.0	14.0	15.0	28.0
20171643	Rear Fixing	15.0	2520.0	14.3	15.0	28.0
20169732	Standard	15.0	2580.0	14.0	15.0	28.0
20171650	Rear Fixing	15.0	2580.0	14.3	15.0	28.0
20169749	Standard	15.0	2640.0	14.0	15.0	28.0
20171667	Rear Fixing	15.0	2640.0	14.3	15.0	28.0
20169756	Standard	15.0	2700.0	14.0	15.0	28.0

Aluminium Linear Guide Rails

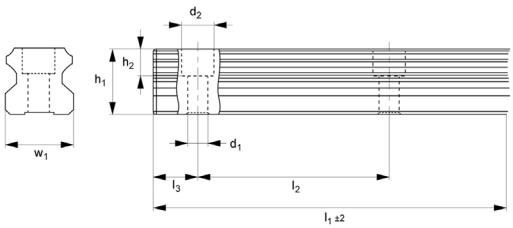

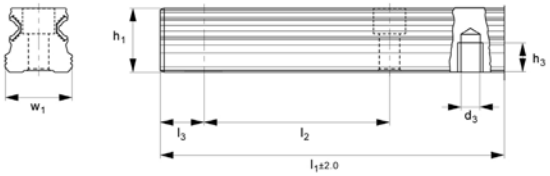



Part Number	Rail Type	Rail size	l1	h1	w1	l3
20171674	Rear Fixing	15.0	2700.0	14.3	15.0	28.0
20169763	Standard	15.0	2760.0	14.0	15.0	28.0
20171681	Rear Fixing	15.0	2760.0	14.3	15.0	28.0
20169770	Standard	15.0	2820.0	14.0	15.0	28.0
20171698	Rear Fixing	15.0	2820.0	14.3	15.0	28.0
20169787	Standard	15.0	2880.0	14.0	15.0	28.0
20171704	Rear Fixing	15.0	2880.0	14.3	15.0	28.0
20169794	Standard	15.0	2940.0	14.0	15.0	28.0
20171711	Rear Fixing	15.0	2940.0	14.3	15.0	28.0
20169312	Standard	15.0	3000.0	14.0	15.0	28.0
20171728	Rear Fixing	15.0	3000.0	14.3	15.0	28.0
20169800	Standard	15.0	3060.0	14.0	15.0	28.0
20171735	Rear Fixing	15.0	3060.0	14.3	15.0	28.0
20169817	Standard	15.0	3120.0	14.0	15.0	28.0
20171742	Rear Fixing	15.0	3120.0	14.3	15.0	28.0
20169824	Standard	15.0	3180.0	14.0	15.0	28.0
20171759	Rear Fixing	15.0	3180.0	14.3	15.0	28.0
20169831	Standard	15.0	3240.0	14.0	15.0	28.0
20171766	Rear Fixing	15.0	3240.0	14.3	15.0	28.0
20169848	Standard	15.0	3300.0	14.0	15.0	28.0
20171773	Rear Fixing	15.0	3300.0	14.3	15.0	28.0

Aluminium Linear Guide Rails

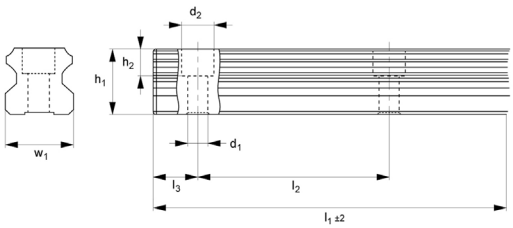

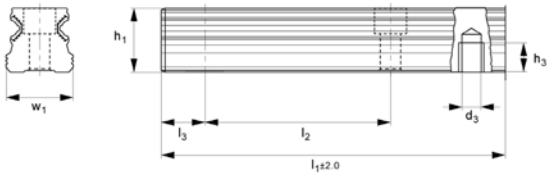



Part Number	Rail Type	Rail size	l1	h1	w1	l3
20169855	Standard	15.0	3360.0	14.0	15.0	28.0
20171780	Rear Fixing	15.0	3360.0	14.3	15.0	28.0
20169862	Standard	15.0	3420.0	14.0	15.0	28.0
20171797	Rear Fixing	15.0	3420.0	14.3	15.0	28.0
20169879	Standard	15.0	3480.0	14.0	15.0	28.0
20171803	Rear Fixing	15.0	3480.0	14.3	15.0	28.0
20169886	Standard	15.0	3540.0	14.0	15.0	28.0
20171810	Rear Fixing	15.0	3540.0	14.3	15.0	28.0
20169893	Standard	15.0	3600.0	14.0	15.0	28.0
20171827	Rear Fixing	15.0	3600.0	14.3	15.0	28.0
20169909	Standard	15.0	3660.0	14.0	15.0	28.0
20171834	Rear Fixing	15.0	3660.0	14.3	15.0	28.0
20169916	Standard	15.0	3720.0	14.0	15.0	28.0
20171841	Rear Fixing	15.0	3720.0	14.3	15.0	28.0
20169923	Standard	15.0	3780.0	14.0	15.0	28.0
20171858	Rear Fixing	15.0	3780.0	14.3	15.0	28.0
20169930	Standard	15.0	3840.0	14.0	15.0	28.0
20171865	Rear Fixing	15.0	3840.0	14.3	15.0	28.0
20169947	Standard	15.0	3900.0	14.0	15.0	28.0
20171872	Rear Fixing	15.0	3900.0	14.3	15.0	28.0
20169954	Standard	15.0	3960.0	14.0	15.0	28.0

Aluminium Linear Guide Rails

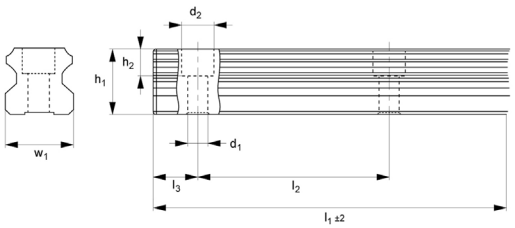

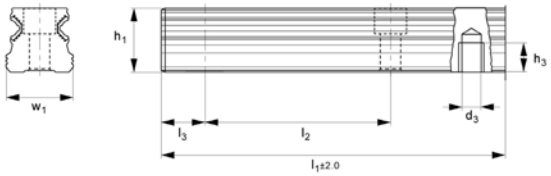



Part Number	Rail Type	Rail size	l1	h1	w1	l3
20171889	Rear Fixing	15.0	3960.0	14.3	15.0	28.0
20169961	Standard	15.0	4000.0	14.0	15.0	28.0
20171896	Rear Fixing	15.0	4000.0	14.3	15.0	28.0
20169978	Standard	20.0	180.0	19.3	20.0	30.0
20171902	Rear Fixing	20.0	180.0	19.3	20.0	28.0
20169985	Standard	20.0	240.0	19.3	20.0	30.0
20171919	Rear Fixing	20.0	240.0	19.3	20.0	28.0
20169992	Standard	20.0	300.0	19.3	20.0	30.0
20171926	Rear Fixing	20.0	300.0	19.3	20.0	28.0
20170004	Standard	20.0	360.0	19.3	20.0	30.0
20171933	Rear Fixing	20.0	360.0	19.3	20.0	28.0
20170011	Standard	20.0	420.0	19.3	20.0	30.0
20171940	Rear Fixing	20.0	420.0	19.3	20.0	28.0
20170028	Standard	20.0	480.0	19.3	20.0	30.0
20171957	Rear Fixing	20.0	480.0	19.3	20.0	28.0
20170035	Standard	20.0	540.0	19.3	20.0	30.0
20171964	Rear Fixing	20.0	540.0	19.3	20.0	28.0
20170042	Standard	20.0	600.0	19.3	20.0	30.0
20171971	Rear Fixing	20.0	600.0	19.3	20.0	28.0
20170059	Standard	20.0	660.0	19.3	20.0	30.0
20171988	Rear Fixing	20.0	660.0	19.3	20.0	28.0

Aluminium Linear Guide Rails

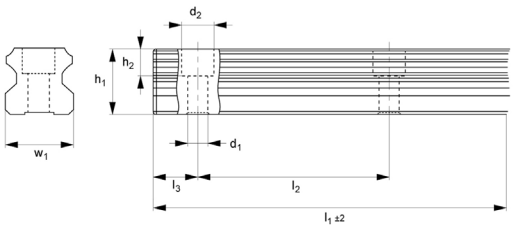

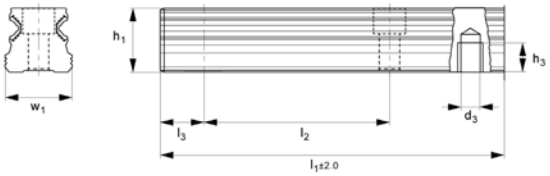



Part Number	Rail Type	Rail size	l1	h1	w1	l3
20170066	Standard	20.0	720.0	19.3	20.0	30.0
20171995	Rear Fixing	20.0	720.0	19.3	20.0	28.0
20170073	Standard	20.0	780.0	19.3	20.0	30.0
20172008	Rear Fixing	20.0	780.0	19.3	20.0	28.0
20170080	Standard	20.0	840.0	19.3	20.0	30.0
20172015	Rear Fixing	20.0	840.0	19.3	20.0	28.0
20170097	Standard	20.0	900.0	19.3	20.0	30.0
20172022	Rear Fixing	20.0	900.0	19.3	20.0	28.0
20170103	Standard	20.0	960.0	19.3	20.0	30.0
20172039	Rear Fixing	20.0	960.0	19.3	20.0	28.0
20170110	Standard	20.0	1020.0	19.3	20.0	30.0
20172046	Rear Fixing	20.0	1020.0	19.3	20.0	28.0
20170127	Standard	20.0	1080.0	19.3	20.0	30.0
20172053	Rear Fixing	20.0	1080.0	19.3	20.0	28.0
20170134	Standard	20.0	1140.0	19.3	20.0	30.0
20172060	Rear Fixing	20.0	1140.0	19.3	20.0	28.0
20170141	Standard	20.0	1200.0	19.3	20.0	30.0
20172077	Rear Fixing	20.0	1200.0	19.3	20.0	28.0
20170158	Standard	20.0	1260.0	19.3	20.0	30.0
20172084	Rear Fixing	20.0	1260.0	19.3	20.0	28.0
20170165	Standard	20.0	1320.0	19.3	20.0	30.0

Aluminium Linear Guide Rails

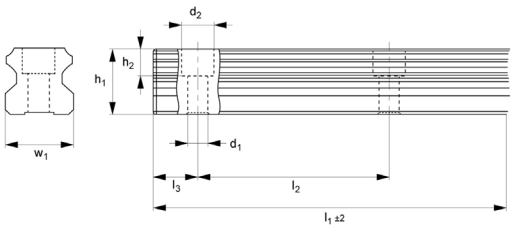

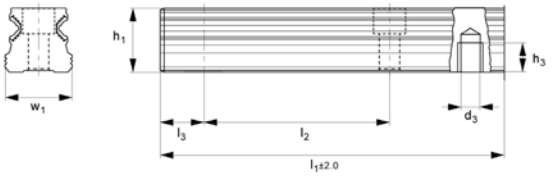



Part Number	Rail Type	Rail size	l1	h1	w1	l3
20172091	Rear Fixing	20.0	1320.0	19.3	20.0	28.0
20170172	Standard	20.0	1380.0	19.3	20.0	30.0
20172107	Rear Fixing	20.0	1380.0	19.3	20.0	28.0
20170189	Standard	20.0	1440.0	19.3	20.0	30.0
20172114	Rear Fixing	20.0	1440.0	19.3	20.0	28.0
20170196	Standard	20.0	1550.0	19.3	20.0	30.0
20172121	Rear Fixing	20.0	1550.0	19.3	20.0	28.0
20170202	Standard	20.0	1560.0	19.3	20.0	30.0
20172138	Rear Fixing	20.0	1560.0	19.3	20.0	28.0
20170219	Standard	20.0	1620.0	19.3	20.0	30.0
20172145	Rear Fixing	20.0	1620.0	19.3	20.0	28.0
20170226	Standard	20.0	1680.0	19.3	20.0	30.0
20172152	Rear Fixing	20.0	1680.0	19.3	20.0	28.0
20170233	Standard	20.0	1740.0	19.3	20.0	30.0
20172169	Rear Fixing	20.0	1740.0	19.3	20.0	28.0
20170240	Standard	20.0	1800.0	19.3	20.0	30.0
20172176	Rear Fixing	20.0	1800.0	19.3	20.0	28.0
20170257	Standard	20.0	1860.0	19.3	20.0	30.0
20172183	Rear Fixing	20.0	1860.0	19.3	20.0	28.0
20170264	Standard	20.0	1920.0	19.3	20.0	30.0
20172190	Rear Fixing	20.0	1920.0	19.3	20.0	28.0

Aluminium Linear Guide Rails

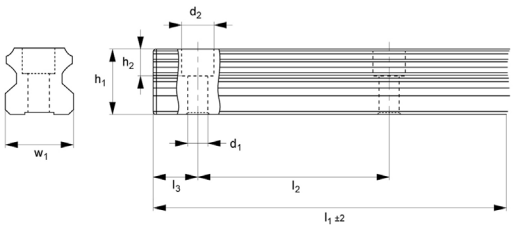

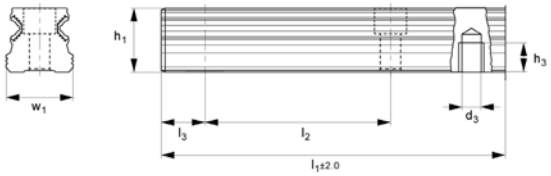



Part Number	Rail Type	Rail size	l1	h1	w1	l3
20170271	Standard	20.0	1980.0	19.3	20.0	30.0
20172206	Rear Fixing	20.0	1980.0	19.3	20.0	28.0
20170288	Standard	20.0	2040.0	19.3	20.0	30.0
20172213	Rear Fixing	20.0	2040.0	19.3	20.0	28.0
20170295	Standard	20.0	2100.0	19.3	20.0	30.0
20172220	Rear Fixing	20.0	2100.0	19.3	20.0	28.0
20170301	Standard	20.0	2160.0	19.3	20.0	30.0
20172237	Rear Fixing	20.0	2160.0	19.3	20.0	28.0
20170318	Standard	20.0	2220.0	19.3	20.0	30.0
20172244	Rear Fixing	20.0	2220.0	19.3	20.0	28.0
20170325	Standard	20.0	2280.0	19.3	20.0	30.0
20172251	Rear Fixing	20.0	2280.0	19.3	20.0	28.0
20170332	Standard	20.0	2340.0	19.3	20.0	30.0
20172268	Rear Fixing	20.0	2340.0	19.3	20.0	28.0
20170349	Standard	20.0	2400.0	19.3	20.0	30.0
20172275	Rear Fixing	20.0	2400.0	19.3	20.0	28.0
20170356	Standard	20.0	2460.0	19.3	20.0	30.0
20172282	Rear Fixing	20.0	2460.0	19.3	20.0	28.0
20170363	Standard	20.0	2520.0	19.3	20.0	30.0
20172299	Rear Fixing	20.0	2520.0	19.3	20.0	28.0
20170370	Standard	20.0	2580.0	19.3	20.0	30.0

Aluminium Linear Guide Rails

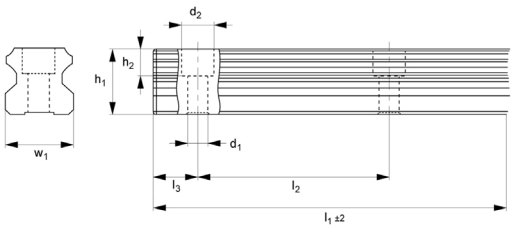

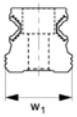

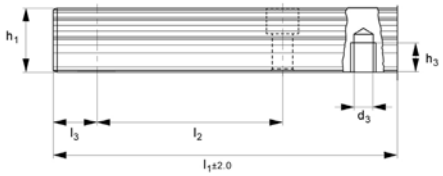



Part Number	Rail Type	Rail size	l1	h1	w1	l3
20172305	Rear Fixing	20.0	2580.0	19.3	20.0	28.0
20170387	Standard	20.0	2640.0	19.3	20.0	30.0
20172312	Rear Fixing	20.0	2640.0	19.3	20.0	28.0
20170394	Standard	20.0	2700.0	19.3	20.0	30.0
20172329	Rear Fixing	20.0	2700.0	19.3	20.0	28.0
20170400	Standard	20.0	2760.0	19.3	20.0	30.0
20172336	Rear Fixing	20.0	2760.0	19.3	20.0	28.0
20170417	Standard	20.0	2820.0	19.3	20.0	30.0
20172343	Rear Fixing	20.0	2820.0	19.3	20.0	28.0
20170424	Standard	20.0	2880.0	19.3	20.0	30.0
20172350	Rear Fixing	20.0	2880.0	19.3	20.0	28.0
20170431	Standard	20.0	2940.0	19.3	20.0	30.0
20172367	Rear Fixing	20.0	2940.0	19.3	20.0	28.0
20169329	Standard	20.0	3000.0	19.3	20.0	30.0
20172374	Rear Fixing	20.0	3000.0	19.3	20.0	28.0
20170448	Standard	20.0	3060.0	19.3	20.0	30.0
20172381	Rear Fixing	20.0	3060.0	19.3	20.0	28.0
20170455	Standard	20.0	3120.0	19.3	20.0	30.0
20172398	Rear Fixing	20.0	3120.0	19.3	20.0	28.0
20170462	Standard	20.0	3180.0	19.3	20.0	30.0
20172404	Rear Fixing	20.0	3180.0	19.3	20.0	28.0

Aluminium Linear Guide Rails

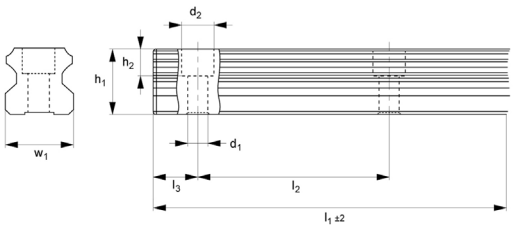

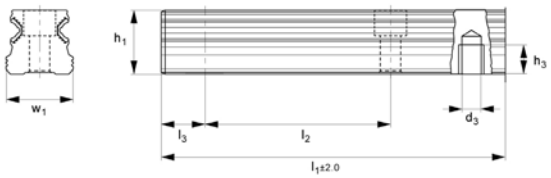



Part Number	Rail Type	Rail size	l1	h1	w1	l3
20170479	Standard	20.0	3240.0	19.3	20.0	30.0
20172411	Rear Fixing	20.0	3240.0	19.3	20.0	28.0
20170486	Standard	20.0	3300.0	19.3	20.0	30.0
20172428	Rear Fixing	20.0	3300.0	19.3	20.0	28.0
20170493	Standard	20.0	3360.0	19.3	20.0	30.0
20172435	Rear Fixing	20.0	3360.0	19.3	20.0	28.0
20170509	Standard	20.0	3420.0	19.3	20.0	30.0
20172442	Rear Fixing	20.0	3420.0	19.3	20.0	28.0
20170516	Standard	20.0	3480.0	19.3	20.0	30.0
20172459	Rear Fixing	20.0	3480.0	19.3	20.0	28.0
20170523	Standard	20.0	3540.0	19.3	20.0	30.0
20172466	Rear Fixing	20.0	3540.0	19.3	20.0	28.0
20170530	Standard	20.0	3600.0	19.3	20.0	30.0
20172473	Rear Fixing	20.0	3600.0	19.3	20.0	28.0
20170547	Standard	20.0	3660.0	19.3	20.0	30.0
20172480	Rear Fixing	20.0	3660.0	19.3	20.0	28.0
20170554	Standard	20.0	3720.0	19.3	20.0	30.0
20172497	Rear Fixing	20.0	3720.0	19.3	20.0	28.0
20170561	Standard	20.0	3780.0	19.3	20.0	30.0
20172503	Rear Fixing	20.0	3780.0	19.3	20.0	28.0
20170578	Standard	20.0	3840.0	19.3	20.0	30.0

Aluminium Linear Guide Rails

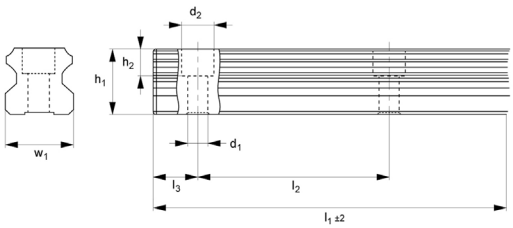

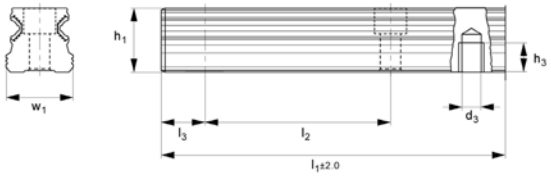



Part Number	Rail Type	Rail size	l1	h1	w1	l3
20172510	Rear Fixing	20.0	3840.0	19.3	20.0	28.0
20170585	Standard	20.0	3900.0	19.3	20.0	30.0
20172527	Rear Fixing	20.0	3900.0	19.3	20.0	28.0
20170592	Standard	20.0	3960.0	19.3	20.0	30.0
20172534	Rear Fixing	20.0	3960.0	19.3	20.0	28.0
20170608	Standard	20.0	4000.0	19.3	20.0	30.0
20172541	Rear Fixing	20.0	4000.0	19.3	20.0	28.0
20170615	Standard	25.0	180.0	21.8	25.0	30.0
20172558	Rear Fixing	25.0	180.0	21.8	25.0	28.0
20170622	Standard	25.0	240.0	21.8	25.0	30.0
20172565	Rear Fixing	25.0	240.0	21.8	25.0	28.0
20170639	Standard	25.0	300.0	21.8	25.0	30.0
20172572	Rear Fixing	25.0	300.0	21.8	25.0	28.0
20170646	Standard	25.0	360.0	21.8	25.0	30.0
20172589	Rear Fixing	25.0	360.0	21.8	25.0	28.0
20170653	Standard	25.0	420.0	21.8	25.0	30.0
20172596	Rear Fixing	25.0	420.0	21.8	25.0	28.0
20170660	Standard	25.0	480.0	21.8	25.0	30.0
20172602	Rear Fixing	25.0	480.0	21.8	25.0	28.0
20170677	Standard	25.0	540.0	21.8	25.0	30.0
20172619	Rear Fixing	25.0	540.0	21.8	25.0	28.0

Aluminium Linear Guide Rails

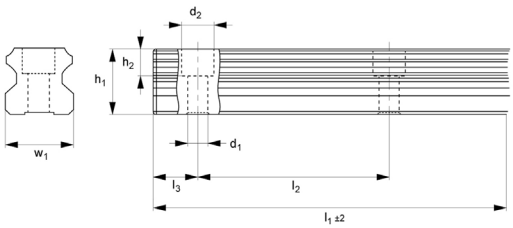

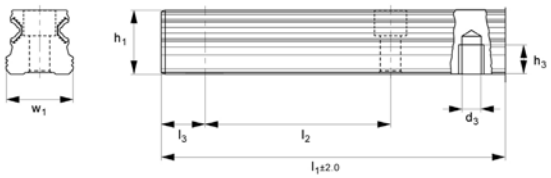



Part Number	Rail Type	Rail size	l1	h1	w1	l3
20170684	Standard	25.0	600.0	21.8	25.0	30.0
20172626	Rear Fixing	25.0	600.0	21.8	25.0	28.0
20170691	Standard	25.0	660.0	21.8	25.0	30.0
20172633	Rear Fixing	25.0	660.0	21.8	25.0	28.0
20170707	Standard	25.0	720.0	21.8	25.0	30.0
20172640	Rear Fixing	25.0	720.0	21.8	25.0	28.0
20170714	Standard	25.0	780.0	21.8	25.0	30.0
20172657	Rear Fixing	25.0	780.0	21.8	25.0	28.0
20170721	Standard	25.0	840.0	21.8	25.0	30.0
20172664	Rear Fixing	25.0	840.0	21.8	25.0	28.0
20170738	Standard	25.0	900.0	21.8	25.0	30.0
20172671	Rear Fixing	25.0	900.0	21.8	25.0	28.0
20170745	Standard	25.0	960.0	21.8	25.0	30.0
20172688	Rear Fixing	25.0	960.0	21.8	25.0	28.0
20170752	Standard	25.0	1020.0	21.8	25.0	30.0
20172695	Rear Fixing	25.0	1020.0	21.8	25.0	28.0
20170769	Standard	25.0	1080.0	21.8	25.0	30.0
20172701	Rear Fixing	25.0	1080.0	21.8	25.0	28.0
20170776	Standard	25.0	1140.0	21.8	25.0	30.0
20172718	Rear Fixing	25.0	1140.0	21.8	25.0	28.0
20170783	Standard	25.0	1200.0	21.8	25.0	30.0

Aluminium Linear Guide Rails

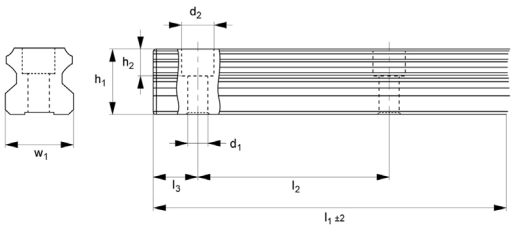

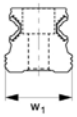

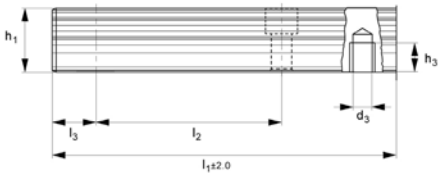



Part Number	Rail Type	Rail size	l1	h1	w1	l3
20172725	Rear Fixing	25.0	1200.0	21.8	25.0	28.0
20170790	Standard	25.0	1260.0	21.8	25.0	30.0
20172732	Rear Fixing	25.0	1260.0	21.8	25.0	28.0
20170806	Standard	25.0	1320.0	21.8	25.0	30.0
20172749	Rear Fixing	25.0	1320.0	21.8	25.0	28.0
20170813	Standard	25.0	1380.0	21.8	25.0	30.0
20172756	Rear Fixing	25.0	1380.0	21.8	25.0	28.0
20170820	Standard	25.0	1440.0	21.8	25.0	30.0
20172763	Rear Fixing	25.0	1440.0	21.8	25.0	28.0
20170837	Standard	25.0	1550.0	21.8	25.0	30.0
20172770	Rear Fixing	25.0	1550.0	21.8	25.0	28.0
20170844	Standard	25.0	1560.0	21.8	25.0	30.0
20172787	Rear Fixing	25.0	1560.0	21.8	25.0	28.0
20170851	Standard	25.0	1620.0	21.8	25.0	30.0
20172794	Rear Fixing	25.0	1620.0	21.8	25.0	28.0
20170868	Standard	25.0	1680.0	21.8	25.0	30.0
20172800	Rear Fixing	25.0	1680.0	21.8	25.0	28.0
20170875	Standard	25.0	1740.0	21.8	25.0	30.0
20172817	Rear Fixing	25.0	1740.0	21.8	25.0	28.0
20170882	Standard	25.0	1800.0	21.8	25.0	30.0
20172824	Rear Fixing	25.0	1800.0	21.8	25.0	28.0

Aluminium Linear Guide Rails

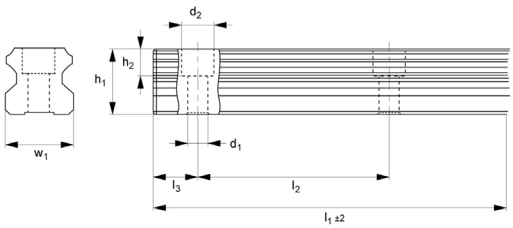

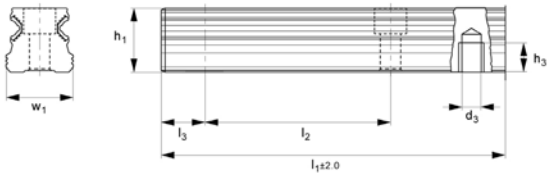



Part Number	Rail Type	Rail size	l1	h1	w1	l3
20170899	Standard	25.0	1860.0	21.8	25.0	30.0
20172831	Rear Fixing	25.0	1860.0	21.8	25.0	28.0
20170905	Standard	25.0	1920.0	21.8	25.0	30.0
20172848	Rear Fixing	25.0	1920.0	21.8	25.0	28.0
20170912	Standard	25.0	1980.0	21.8	25.0	30.0
20172855	Rear Fixing	25.0	1980.0	21.8	25.0	28.0
20170929	Standard	25.0	2040.0	21.8	25.0	30.0
20172862	Rear Fixing	25.0	2040.0	21.8	25.0	28.0
20170936	Standard	25.0	2100.0	21.8	25.0	30.0
20172879	Rear Fixing	25.0	2100.0	21.8	25.0	28.0
20170943	Standard	25.0	2160.0	21.8	25.0	30.0
20172886	Rear Fixing	25.0	2160.0	21.8	25.0	28.0
20170950	Standard	25.0	2220.0	21.8	25.0	30.0
20172893	Rear Fixing	25.0	2220.0	21.8	25.0	28.0
20170967	Standard	25.0	2280.0	21.8	25.0	30.0
20172909	Rear Fixing	25.0	2280.0	21.8	25.0	28.0
20170974	Standard	25.0	2340.0	21.8	25.0	30.0
20172916	Rear Fixing	25.0	2340.0	21.8	25.0	28.0
20170981	Standard	25.0	2400.0	21.8	25.0	30.0
20172923	Rear Fixing	25.0	2400.0	21.8	25.0	28.0
20170998	Standard	25.0	2460.0	21.8	25.0	30.0

Aluminium Linear Guide Rails

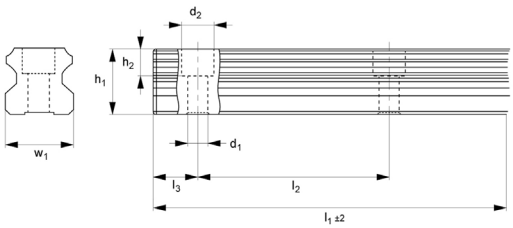

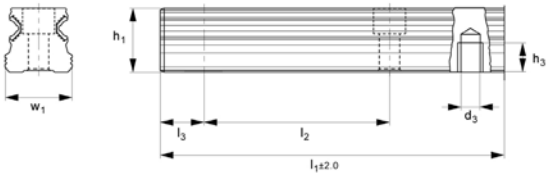



Part Number	Rail Type	Rail size	l1	h1	w1	l3
20172930	Rear Fixing	25.0	2460.0	21.8	25.0	28.0
20171001	Standard	25.0	2520.0	21.8	25.0	30.0
20172947	Rear Fixing	25.0	2520.0	21.8	25.0	28.0
20171018	Standard	25.0	2580.0	21.8	25.0	30.0
20172954	Rear Fixing	25.0	2580.0	21.8	25.0	28.0
20171025	Standard	25.0	2640.0	21.8	25.0	30.0
20172961	Rear Fixing	25.0	2640.0	21.8	25.0	28.0
20171032	Standard	25.0	2700.0	21.8	25.0	30.0
20172978	Rear Fixing	25.0	2700.0	21.8	25.0	28.0
20171049	Standard	25.0	2760.0	21.8	25.0	30.0
20172985	Rear Fixing	25.0	2760.0	21.8	25.0	28.0
20171056	Standard	25.0	2820.0	21.8	25.0	30.0
20172992	Rear Fixing	25.0	2820.0	21.8	25.0	28.0
20171063	Standard	25.0	2880.0	21.8	25.0	30.0
20173005	Rear Fixing	25.0	2880.0	21.8	25.0	28.0
20171070	Standard	25.0	2940.0	21.8	25.0	30.0
20173012	Rear Fixing	25.0	2940.0	21.8	25.0	28.0
20171087	Standard	25.0	3000.0	21.8	25.0	30.0
20173029	Rear Fixing	25.0	3000.0	21.8	25.0	28.0
20171094	Standard	25.0	3060.0	21.8	25.0	30.0
20173036	Rear Fixing	25.0	3060.0	21.8	25.0	28.0

Aluminium Linear Guide Rails

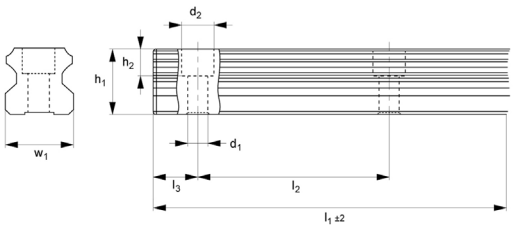

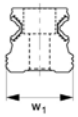

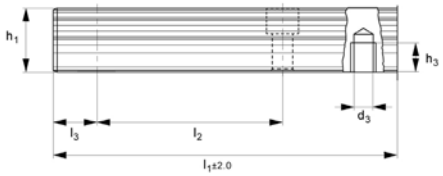



Part Number	Rail Type	Rail size	l1	h1	w1	l3
20171100	Standard	25.0	3120.0	21.8	25.0	30.0
20173043	Rear Fixing	25.0	3120.0	21.8	25.0	28.0
20171117	Standard	25.0	3180.0	21.8	25.0	30.0
20173050	Rear Fixing	25.0	3180.0	21.8	25.0	28.0
20171124	Standard	25.0	3240.0	21.8	25.0	30.0
20173067	Rear Fixing	25.0	3240.0	21.8	25.0	28.0
20171131	Standard	25.0	3300.0	21.8	25.0	30.0
20173074	Rear Fixing	25.0	3300.0	21.8	25.0	28.0
20171148	Standard	25.0	3360.0	21.8	25.0	30.0
20173081	Rear Fixing	25.0	3360.0	21.8	25.0	28.0
20171155	Standard	25.0	3420.0	21.8	25.0	30.0
20173098	Rear Fixing	25.0	3420.0	21.8	25.0	28.0
20171162	Standard	25.0	3480.0	21.8	25.0	30.0
20173104	Rear Fixing	25.0	3480.0	21.8	25.0	28.0
20171179	Standard	25.0	3540.0	21.8	25.0	30.0
20173111	Rear Fixing	25.0	3540.0	21.8	25.0	28.0
20171186	Standard	25.0	3600.0	21.8	25.0	30.0
20173128	Rear Fixing	25.0	3600.0	21.8	25.0	28.0
20171193	Standard	25.0	3660.0	21.8	25.0	30.0
20173135	Rear Fixing	25.0	3660.0	21.8	25.0	28.0
20171209	Standard	25.0	3720.0	21.8	25.0	30.0

Aluminium Linear Guide Rails

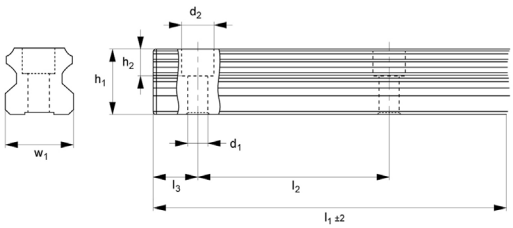

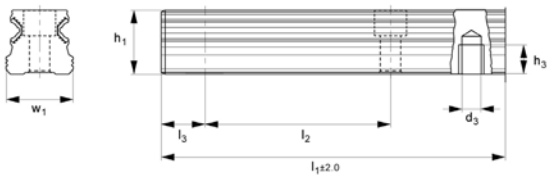



Part Number	Rail Type	Rail size	l1	h1	w1	l3
20173142	Rear Fixing	25.0	3720.0	21.8	25.0	28.0
20171216	Standard	25.0	3780.0	21.8	25.0	30.0
20173159	Rear Fixing	25.0	3780.0	21.8	25.0	28.0
20171223	Standard	25.0	3840.0	21.8	25.0	30.0
20173166	Rear Fixing	25.0	3840.0	21.8	25.0	28.0
20171230	Standard	25.0	3900.0	21.8	25.0	30.0
20173173	Rear Fixing	25.0	3900.0	21.8	25.0	28.0
20171247	Standard	25.0	3960.0	21.8	25.0	30.0
20173180	Rear Fixing	25.0	3960.0	21.8	25.0	28.0
20171254	Standard	25.0	4000.0	21.8	25.0	30.0
20173197	Rear Fixing	25.0	4000.0	21.8	25.0	28.0

Unflanged Aluminium Carriages

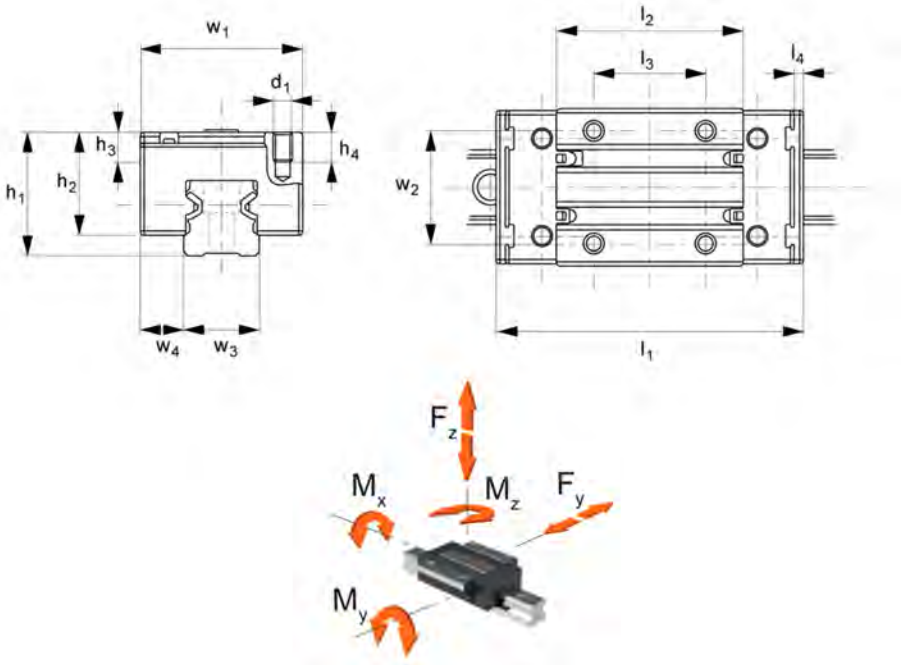



Features

- Unflanged design provides a more compact solution when compared against the flanged carriages.
- It is lighter and more corrosion-resistant than steel.
- It is effective for heavy loads in various applications where they guide and support linear motion.

Specifications

Material: Aluminium

These Unflanged Aluminium Carriages are a type of linear bearing that is very effective for heavy loads in various applications where they guide and support linear motion. Their rails are composed of contoured aluminium, with two hardened stainless steel shafts pressed to function as the raceways for the runner block balls.

The unflanged design provides a more compact solution when compared against the flanged carriages but the moving component in the application can only be mounted to the top of the carriage.

Because it is lighter and more corrosion-resistant than steel, it can be used in various applications, including aerospace, machinery, handling technology, machine enclosures, medical, food, etc.

Unflanged Aluminium Carriages

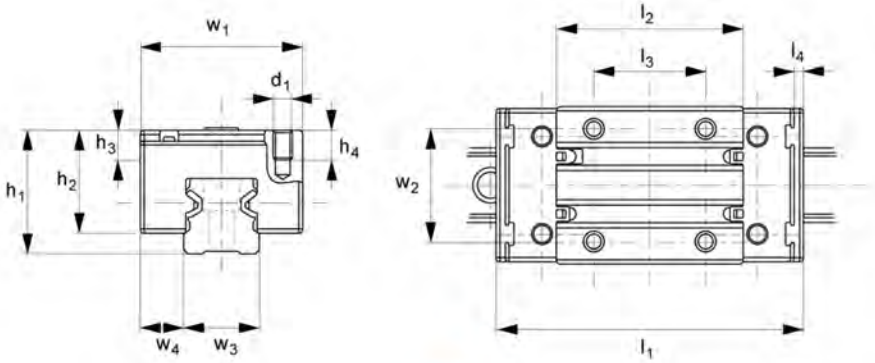

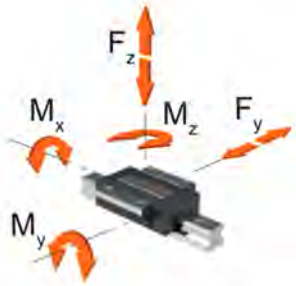



Part Number	Rail size	l1	w1	h1 ±003	d1	h2	h3
20159115	15.0	64.0	34.0	24.0	M4	19.8	4.1
20159122	20.0	85.9	44.0	30.0	M5	24.7	5.5
20159139	25.0	96.0	48.0	36.0	M6	29.9	6.4

Flanged Aluminium Carriages

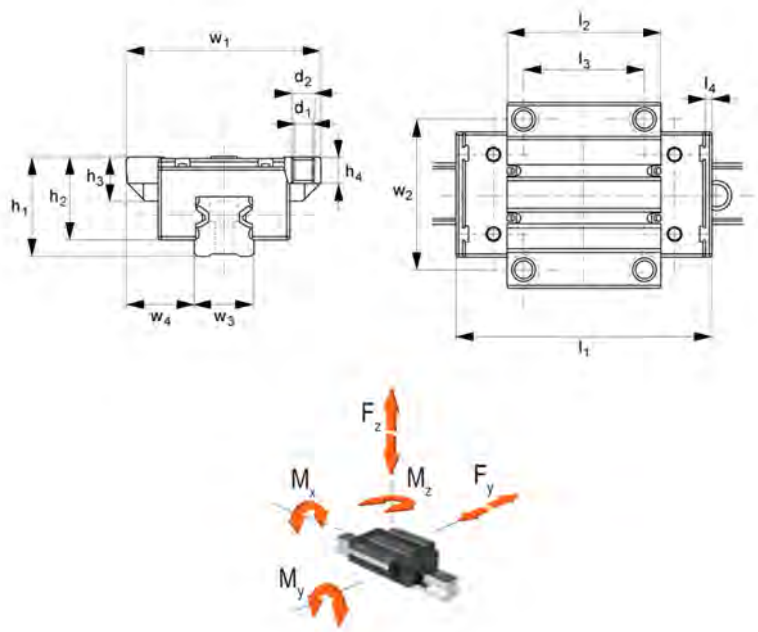



Features

- Useful for heavy loads in a range of applications where they guide and support linear motion.
- Flange design provides both a greater surface area for the moving component to be mounted to, but also the ability to fasten to the moving part.
- It works well in harsh conditions since it is lightweight and corrosion-resistant.

Specifications

Material: Aluminium;Stainless Steel

These Flanged Aluminium Carriages are a type of linear bearing that is particularly useful for heavy loads in a range of applications where they guide and support linear motion. Their rails are made of contoured aluminium with two hardened stainless steel shafts pressed to act as the runner block balls' raceways.

The flange design provides both a greater surface area for the moving component to be mounted to, but also the ability to fasten to the moving part from either above or below the carriage.

It works well in harsh conditions or weight critical applications since it is more lightweight and corrosion-resistant than steel ones. It can be used in various applications, including machinery, aerospace, handling technology, machine enclosures, medical, food, etc.

Flanged Aluminium Carriages

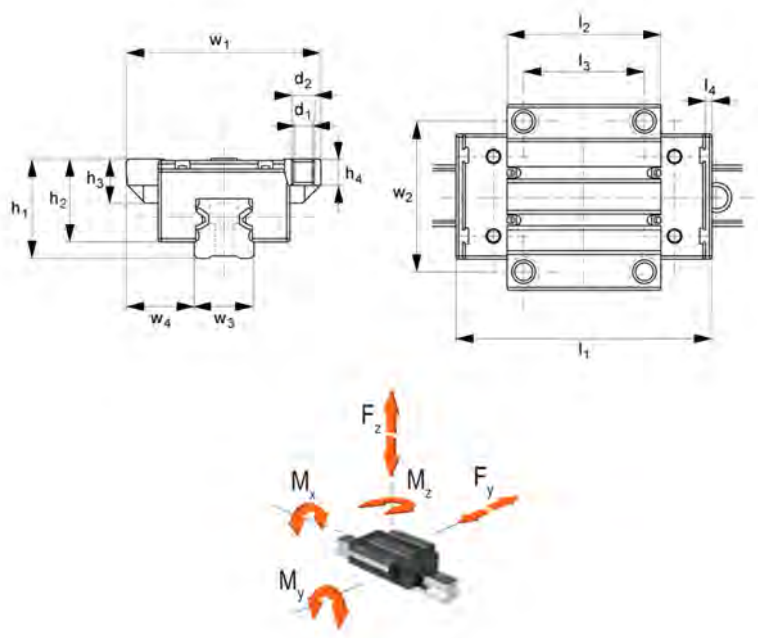



Part Number	Rail size	l1	w1	h1 ±003	d1	d2	h2
20159085	15.0	64.0	47.0	24.0	4.3	M5	19.8
20159092	20.0	85.9	63.0	30.0	5.3	M6	24.7
20159108	25.0	96.0	70.0	36.0	6.7	M8	29.9

Crossed Roller Rail Sets

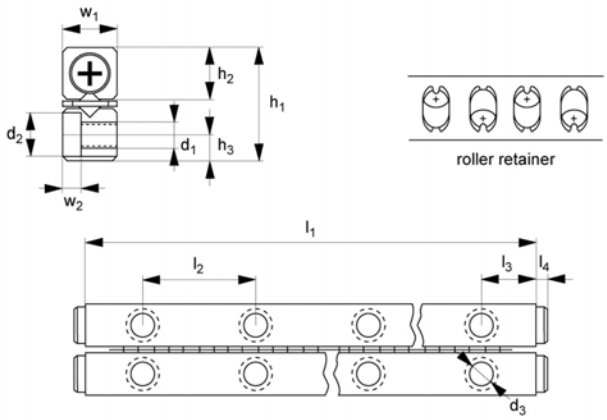



Features

- It is perfect for applications where space is restricted or a compact design is required.
- It can withstand temperatures from -40 C to +80C.
- It comes in four rails, each with two roller cages and eight head bolts.

Specifications

Material: Steel

These Crossed Roller Rail Sets are linear motion systems that provide applications with positioning and smooth guiding. Its design, which consists of two parallel rails with crossed roller bearings, allows for high-precision linear motion and outstanding load-carrying capability.

They evenly distribute loads, resulting in minimum deflection and great repeatability, allowing for precise motion control. Because of their small shape, they are perfect for applications where space is restricted or a compact design is required.

It comes in four rails, each with two roller cages and eight head bolts. They are corrosion-resistant and can withstand temperatures from -40 C to +80C. Used in applications such as industrial automotive, medical equipment, machine tools and defence.

Crossed Roller Rail Sets

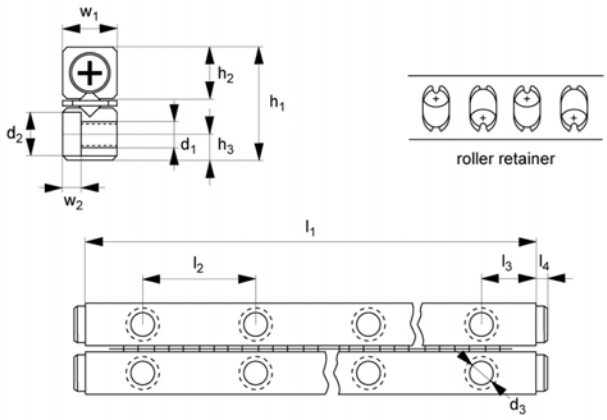



Part Number	l1	Stroke max	w1	d1	d2	d3	h1 +0|-0.3
20161897	20.0	13.0	4.0	1.65	3.0	M2	8.5
20161903	30.0	21.0	4.0	1.65	3.0	M2	8.5
20161910	40.0	29.0	4.0	1.65	3.0	M2	8.5
20161927	50.0	37.0	4.0	1.65	3.0	M2	8.5
20161934	60.0	45.0	4.0	1.65	3.0	M2	8.5
20161941	70.0	53.0	4.0	1.65	3.0	M2	8.5
20161958	80.0	61.0	4.0	1.65	3.0	M2	8.5
20161965	30.0	24.0	6.0	2.55	4.4	M3	12.0
20161972	45.0	30.0	6.0	2.55	4.4	M3	12.0
20161989	60.0	44.0	6.0	2.55	4.4	M3	12.0
20161996	75.0	58.0	6.0	2.55	4.4	M3	12.0
20162009	90.0	72.0	6.0	2.55	4.4	M3	12.0
20162016	105.0	86.0	6.0	2.55	4.4	M3	12.0
20162023	120.0	100.0	6.0	2.55	4.4	M3	12.0
20162030	135.0	106.0	6.0	2.55	4.4	M3	12.0
20162047	150.0	120.0	6.0	2.55	4.4	M3	12.0
20174033	165.0	134.0	6.0	2.55	4.4	M3	12.0
20162054	180.0	148.0	6.0	2.55	4.4	M3	12.0
20162061	50.0	34.0	8.0	3.3	6.0	M4	18.0
20162078	75.0	54.0	8.0	3.3	6.0	M4	18.0
20162085	100.0	74.0	8.0	3.3	6.0	M4	18.0
20162092	125.0	104.0	8.0	3.3	6.0	M4	18.0

Crossed Roller Rail Sets

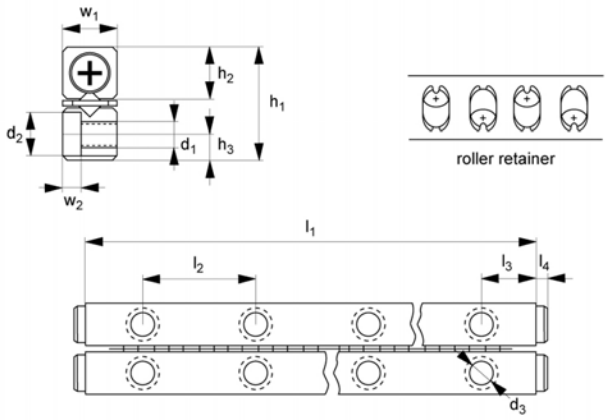



Part Number	l1	Stroke max	w1	d1	d2	d3	h1 +0|-0.3
20162108	150.0	124.0	8.0	3.3	6.0	M4	18.0
20162115	175.0	144.0	8.0	3.3	6.0	M4	18.0
20162122	200.0	164.0	8.0	3.3	6.0	M4	18.0
20162139	225.0	184.0	8.0	3.3	6.0	M4	18.0
20162146	250.0	204.0	8.0	3.3	6.0	M4	18.0
20162153	275.0	224.0	8.0	3.3	6.0	M4	18.0
20162160	300.0	244.0	8.0	3.3	6.0	M4	18.0
20159344	80.0	54.0	11.0	4.3	7.5	M5	22.0
20159313	120.0	92.0	11.0	4.3	7.5	M5	22.0
20162177	160.0	130.0	11.0	4.3	7.5	M5	22.0
20161880	200.0	154.0	11.0	4.3	7.5	M5	22.0
20162184	240.0	192.0	11.0	4.3	7.5	M5	22.0
20162467	280.0	230.0	11.0	4.3	7.5	M5	22.0
20162191	320.0	254.0	11.0	4.3	7.5	M5	22.0
20162207	360.0	292.0	11.0	4.3	7.5	M5	22.0
20162214	400.0	330.0	11.0	4.3	7.5	M5	22.0
20162450	440.0	354.0	11.0	4.3	7.5	M5	22.0
20162221	480.0	392.0	11.0	4.3	7.5	M5	22.0
20162238	100.0	80.0	15.0	5.3	9.5	M6	31.0
20162245	150.0	108.0	15.0	5.3	9.5	M6	31.0
20162252	200.0	154.0	15.0	5.3	9.5	M6	31.0
20162269	250.0	200.0	15.0	5.3	9.5	M6	31.0

Crossed Roller Rail Sets

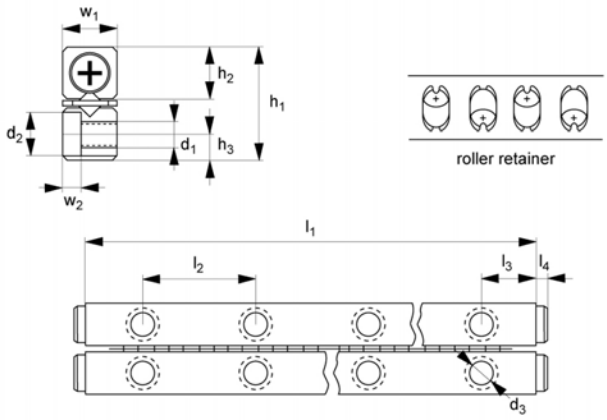



Part Number	l1	Stroke max	w1	d1	d2	d3	h1 +0|-0.3
20162276	300.0	246.0	15.0	5.3	9.5	M6	31.0
20162283	350.0	274.0	15.0	5.3	9.5	M6	31.0
20162290	400.0	320.0	15.0	5.3	9.5	M6	31.0
20162306	450.0	366.0	15.0	5.3	9.5	M6	31.0
20162313	500.0	412.0	15.0	5.3	9.5	M6	31.0
20162320	550.0	458.0	15.0	5.3	9.5	M6	31.0
20162337	600.0	486.0	15.0	5.3	9.5	M6	31.0
20159320	1000.0	805.0	22.0	6.8	10.5	M8	44.0
20159337	1100.0	894.0	22.0	6.8	10.5	M8	44.0
20174071	1200.0	982.0	22.0	6.8	10.5	M8	44.0
20162344	200.0	158.0	22.0	6.8	10.5	M8	44.0
20162351	300.0	246.0	22.0	6.8	10.5	M8	44.0
20162368	400.0	306.0	22.0	6.8	10.5	M8	44.0
20162375	500.0	394.0	22.0	6.8	10.5	M8	44.0
20162382	600.0	482.0	22.0	6.8	10.5	M8	44.0
20174040	700.0	570.0	22.0	6.8	10.5	M8	44.0
20174057	800.0	658.0	22.0	6.8	10.5	M8	44.0
20174064	900.0	746.0	22.0	6.8	10.5	M8	44.0
20159290	1000.0	824.0	28.0	8.5	13.5	M10	58.0
20174118	1100.0	916.0	28.0	8.5	13.5	M10	58.0
20174125	1200.0	972.0	28.0	8.5	13.5	M10	58.0
20162399	200.0	160.0	28.0	8.5	13.5	M10	58.0

Crossed Roller Rail Sets

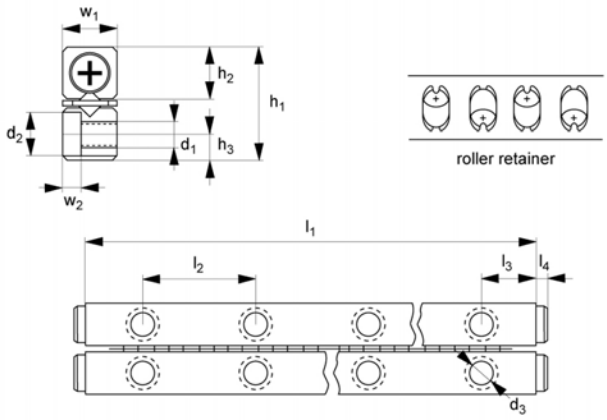



Part Number	l1	Stroke max	w1	d1	d2	d3	h1 +0|-0.3
20162405	300.0	216.0	28.0	8.5	13.5	M10	58.0
20162412	400.0	308.0	28.0	8.5	13.5	M10	58.0
20162429	500.0	400.0	28.0	8.5	13.5	M10	58.0
20162436	600.0	492.0	28.0	8.5	13.5	M10	58.0
20174088	700.0	548.0	28.0	8.5	13.5	M10	58.0
20174095	800.0	640.0	28.0	8.5	13.5	M10	58.0
20174101	900.0	732.0	28.0	8.5	13.5	M10	58.0

Lead Screws

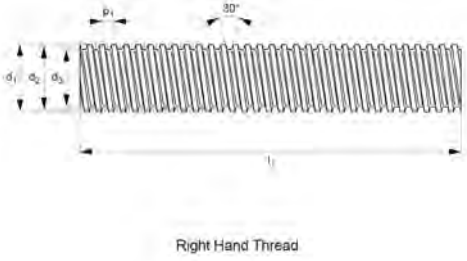

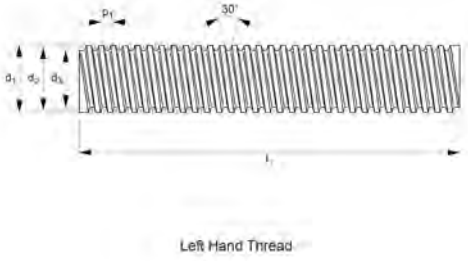



Features

- Available as standard right-hand thread lead screws as well as left-hand threaded.
- 'Lead' refers to the distance a nut will travel for a complete revolution of the screw.
- Used for standard applications that require a lower degree of precision and accuracy

Specifications

Material: Stainless Steel, Steel

Lead screws are a type of screws used to convert rotational motion into linear motion by converting the rotational movement of the screw into forward motion of the nut. 'Lead' refers to the distance a nut will travel for a complete revolution of the screw.

They are used for standard applications that require a lower degree of precision and accuracy, or where a ball screw is not suitable due to environmental conditions. They are strong, durable, and more cost efficient than ball screws.

They are also used in robotics, automotive or CNC machining industries. Available as standard right-hand thread lead screws as well as left-hand threaded. Please note: These lead screws, unlike threaded rods (not to be confused between them), have a thicker and stronger raceway which makes them ideal for heavy load applications where repetitive linear motion occurs.

Lead Screws

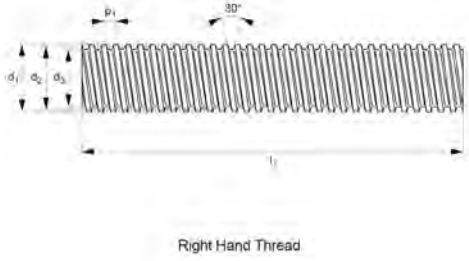

Right Hand Thread

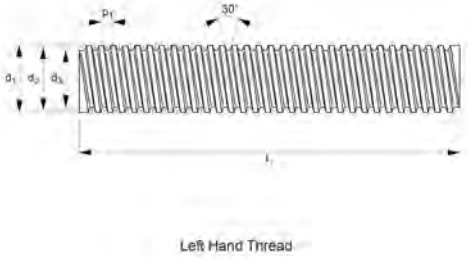

Left Hand Thread



Part Number	Thread Size	d1 tol. 7e	d2 tol. 7e min	d3 tol. 7h min	l1	p1	Material
20150877	TR10 x 2	10.0	8.739	6.891	1000.0	2.0	Steel
20150860	TR10 x 2	10.0	8.739	6.891	1500.0	2.0	Steel
20152987	TR10 x 2	10.0	8.739	6.891	2000.0	2.0	Steel
20150891	TR10 x 2	10.0	8.739	7.685	3000.0	2.0	Steel
20150914	TR10 x 4	10.0	8.716	7.685	1000.0	2.0	Steel
20151935	TR10 x 4	10.0	8.716	9.685	1500.0	2.0	Steel
20152994	TR10 x 4	10.0	8.716	9.685	2000.0	2.0	Steel
20150921	TR10 x 4	10.0	8.716	6.891	3000.0	2.0	Steel
20150884	TR10 x 2	10.0	8739.0	6.891	1000.0	2.0	Steel
20151928	TR10 x 2	10.0	8739.0	6.891	1500.0	2.0	Steel
20153298	TR10 x 2	10.0	8739.0	6.891	2000.0	2.0	Steel
20150907	TR10 x 2	10.0	8739.0	6.891	3000.0	2.0	Steel
20150143	TR10 x 2	10.0	8739.0	6.891	1000.0	2.0	Stainless Steel
20150136	TR10 x 2	10.0	8739.0	6.891	1500.0	2.0	Stainless Steel
20153472	TR10 x 2	10.0	8739.0	6.891	2000.0	2.0	Stainless Steel
20150150	TR10 x 2	10.0	8739.0	6.891	3000.0	2.0	Stainless Steel
20150952	TR12 x 3	12.0	10.191	7.685	1000.0	3.0	Steel
20150945	TR12 x 3	12.0	10.191	7.685	1500.0	3.0	Steel
20153014	TR12 x 3	12.0	10.191	7.685	2000.0	3.0	Steel
20150976	TR12 x 3	12.0	10.191	7.685	3000.0	3.0	Steel
20150990	TR12 x 6	12.0	10.164	7.685	1000.0	3.0	Steel
20151966	TR12 x 6	12.0	10.164	7.685	1500.0	3.0	Steel

Lead Screws

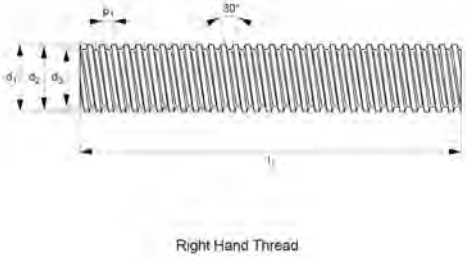

Right Hand Thread

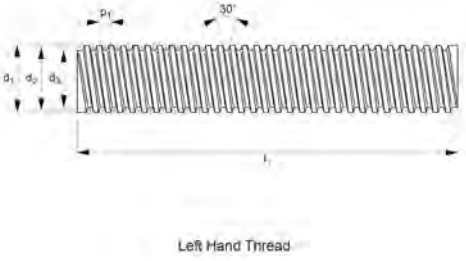

Left Hand Thread



Part Number	Thread Size	d1 tol. 7e	d2 tol. 7e min	d3 tol. 7h min	l1	p1	Material
20153021	TR12 x 6	12.0	10.164	7.685	2000.0	3.0	Steel
20151003	TR12 x 6	12.0	10.164	7.685	3000.0	3.0	Steel
20150969	TR12 x 3	12.0	10.191	7.685	1000.0	3.0	Steel
20151959	TR12 x 3	12.0	10.191	7.685	1500.0	3.0	Steel
20153304	TR12 x 3	12.0	10.191	7.685	2000.0	3.0	Steel
20150983	TR12 x 3	12.0	10.191	7.685	3000.0	3.0	Steel
20150174	TR12 x 3	12.0	10.191	7.685	1000.0	3.0	Stainless Steel
20152512	TR12 x 3	12.0	10.191	7.685	1500.0	3.0	Stainless Steel
20152734	TR12 x 3	12.0	10.191	7.685	2000.0	3.0	Stainless Steel
20150198	TR12 x 3	12.0	10.191	7.685	3000.0	3.0	Stainless Steel
20150181	TR12 x 3	12.0	10.191	7.685	1000.0	3.0	Stainless Steel
20150167	TR12 x 3	12.0	10.191	7.685	1500.0	3.0	Stainless Steel
20152871	TR12 x 3	12.0	10.191	7.685	2000.0	3.0	Stainless Steel
20150204	TR12 x 3	12.0	10.191	7.685	3000.0	3.0	Stainless Steel
20151027	TR14 x 3	14.0	12.191	9.685	1000.0	3.0	Steel
20151010	TR14 x 3	14.0	12.191	9.685	1500.0	3.0	Steel
20153038	TR14 x 3	14.0	12.191	9.685	2000.0	3.0	Steel
20151041	TR14 x 3	14.0	12.191	9.685	3000.0	3.0	Steel
20151065	TR14 x 6	14.0	12.164	9.685	1000.0	3.0	Steel
20151980	TR14 x 6	14.0	12.164	9.685	1500.0	3.0	Steel
20153045	TR14 x 6	14.0	12.164	9.685	2000.0	3.0	Steel
20152253	TR14 x 6	14.0	12.164	9.685	3000.0	3.0	Steel

Lead Screws

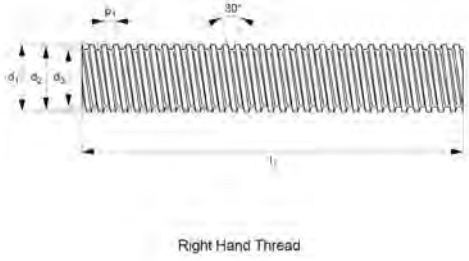

Right Hand Thread

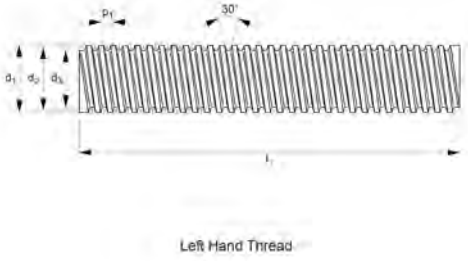

Left Hand Thread



Part Number	Thread Size	d1 tol. 7e	d2 tol. 7e min	d3 tol. 7h min	l1	p1	Material
20151034	TR14 x 3	14.0	12.191	9.685	1000.0	3.0	Steel
20151973	TR14 x 3	14.0	12.191	9.685	1500.0	3.0	Steel
20153311	TR14 x 3	14.0	12.191	9.685	2000.0	3.0	Steel
20151058	TR14 x 3	14.0	12.191	9.685	3000.0	3.0	Steel
20150228	TR14 x 3	14.0	12.191	9.685	1000.0	3.0	Stainless Steel
20150211	TR14 x 3	14.0	12.191	9.685	1500.0	3.0	Stainless Steel
20152741	TR14 x 3	14.0	12.191	9.685	2000.0	3.0	Stainless Steel
20150235	TR14 x 3	14.0	12.191	9.685	3000.0	3.0	Stainless Steel
20151089	TR16 x 4	16.0	13.640	10.474	1000.0	4.0	Steel
20151072	TR16 x 4	16.0	13.640	10.474	1500.0	4.0	Steel
20152710	TR16 x 4	16.0	13.640	10.474	2000.0	4.0	Steel
20151102	TR16 x 4	16.0	13.640	10.474	3000.0	4.0	Steel
20151126	TR16 x 8	16.0	13.608	10.474	1000.0	4.0	Steel
20152000	TR16 x 8	16.0	13.608	10.474	1500.0	4.0	Steel
20153052	TR16 x 8	16.0	13.608	10.474	2000.0	4.0	Steel
20152260	TR16 x 8	16.0	13.608	10.474	3000.0	4.0	Steel
20151096	TR16 x 4	16.0	13.640	10.474	1000.0	4.0	Steel
20151997	TR16 x 4	16.0	13.640	10.474	1500.0	4.0	Steel
20153328	TR16 x 4	16.0	13.640	10.474	2000.0	4.0	Steel
20151119	TR15 x 4	16.0	13.640	10.474	3000.0	4.0	Steel
20150259	TR16 x 4	16.0	13.640	10.474	1000.0	4.0	Stainless Steel
20152529	TR16 x 4	16.0	13.640	10.474	1500.0	4.0	Stainless Steel

Lead Screws

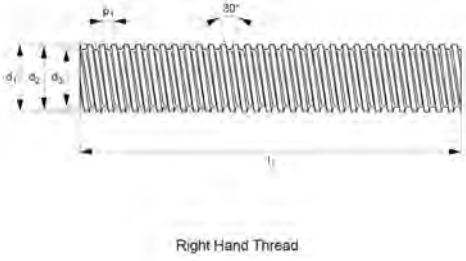

Right Hand Thread

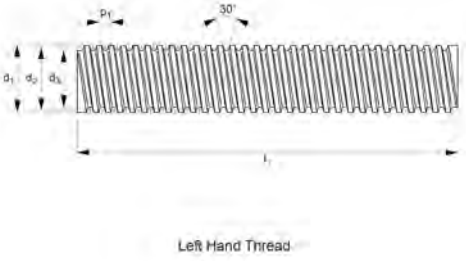

Left Hand Thread



Part Number	Thread Size	d1 tol. 7e	d2 tol. 7e min	d3 tol. 7h min	l1	p1	Material
20152758	TR16 x 4	16.0	13.640	10.474	2000.0	4.0	Stainless Steel
20150273	TR16 x 4	16.0	13.640	10.474	3000.0	4.0	Stainless Steel
20150266	TR16 x 4	16.0	13.640	10.474	1000.0	4.0	Stainless Steel
20150242	TR16 x 4	16.0	13.640	10.474	1500.0	4.0	Stainless Steel
20152888	TR16 x 4	16.0	13.640	10.474	2000.0	4.0	Stainless Steel
20150280	TR16 x 4	16.0	13.640	10.474	3000.0	4.0	Stainless Steel
20151140	TR18 x 4	18.0	15.640	12.474	1000.0	4.0	Steel
20151133	TR18 x 4	18.0	15.640	12.474	1500.0	4.0	Steel
20153069	TR18 x 4	18.0	15.640	12.474	2000.0	4.0	Steel
20151164	TR18 x 4	18.0	15.640	12.474	3000.0	4.0	Steel
20151188	TR18 x 8	18.0	15.608	12.474	1000.0	4.0	Steel
20152024	TR18 x 8	18.0	15.608	12.474	1500.0	4.0	Steel
20153076	TR18 x 8	18.0	15.608	12.474	2000.0	4.0	Steel
20152277	TR18 x 8	18.0	15.608	12.474	3000.0	4.0	Steel
20151157	TR18 x 4	18.0	15.640	12.474	1000.0	4.0	Steel
20152017	TR18 x 4	18.0	15.640	12.474	1500.0	4.0	Steel
20153335	TR18 x 4	18.0	15.640	12.474	2000.0	4.0	Steel
20151171	TR18 x 4	18.0	15.640	12.474	3000.0	4.0	Steel
20150303	TR18 x 4	18.0	15.640	12.474	1000.0	4.0	Stainless Steel
20150297	TR18 x 4	18.0	15.640	12.474	1500.0	4.0	Stainless Steel
20152765	TR18 x 4	18.0	15.640	12.474	2000.0	4.0	Stainless Steel
20150310	TR18 x 4	18.0	15.640	12.474	3000.0	4.0	Stainless Steel

Lead Screws

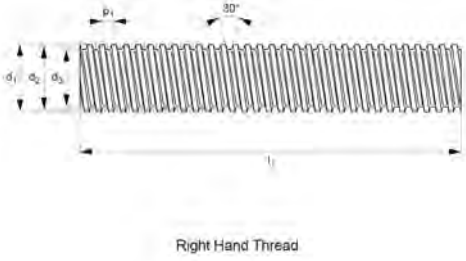

Right Hand Thread

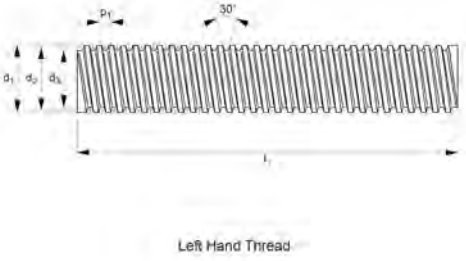

Left Hand Thread



Part Number	Thread Size	d1 tol. 7e	d2 tol. 7e min	d3 tol. 7h min	l1	p1	Material
20151201	TR20 x 4	20.0	17.640	14.474	1000.0	4.0	Steel
20151195	TR20 x 4	20.0	17.640	14.474	1500.0	4.0	Steel
20153083	TR20 x 4	20.0	17.640	14.474	2000.0	4.0	Steel
20151225	TR20 x 4	20.0	17.640	14.474	3000.0	4.0	Steel
20151256	TR20 x 8	20.0	17.608	14.474	1000.0	4.0	Steel
20151249	TR20 x 8	20.0	17.608	14.474	1500.0	4.0	Steel
20153090	TR20 x 8	20.0	17.608	14.474	2000.0	4.0	Steel
20151263	TR20 x 8	20.0	17.608	14.474	3000.0	4.0	Steel
20151218	TR20 x 4	20.0	17.640	14.474	1000.0	4.0	Steel
20152031	TR20 x 4	20.0	17.640	14.474	1500.0	4.0	Steel
20153342	TR20 x 4	20.0	17.640	14.474	2000.0	4.0	Steel
20151232	TR20 x 4	20.0	17.640	14.474	3000.0	4.0	Steel
20150334	TR20 x 4	20.0	17.640	14.474	1000.0	4.0	Stainless Steel
20152536	TR20 x 4	20.0	17.640	14.474	1500.0	4.0	Stainless Steel
20152772	TR20 x 4	20.0	17.640	14.474	2000.0	4.0	Stainless Steel
20150358	TR20 x 4	20.0	17.640	14.474	3000.0	4.0	Stainless Steel
20150341	TR20 x 4	20.0	17.640	14.474	1000.0	4.0	Stainless Steel
20150327	TR20 x 4	20.0	17.640	14.474	1500.0	4.0	Stainless Steel
20152895	TR20 x 4	20.0	17.640	14.474	2000.0	4.0	Stainless Steel
20150365	TR20 x 4	20.0	17.640	14.474	3000.0	4.0	Stainless Steel
20151287	TR22 x 5	22.0	19.114	15.294	1000.0	5.0	Steel
20151270	TR22 x 5	22.0	19.114	15.294	1500.0	5.0	Steel

Lead Screws

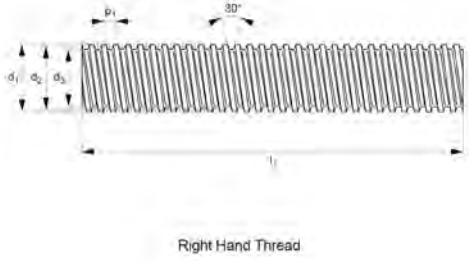

Right Hand Thread

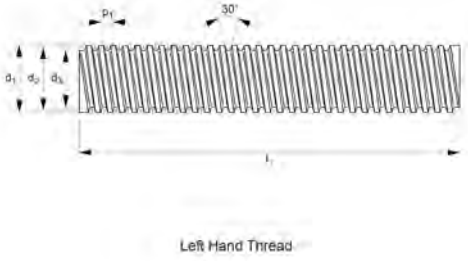

Left Hand Thread



Part Number	Thread Size	d1 tol. 7e	d2 tol. 7e min	d3 tol. 7h min	l1	p1	Material
20153106	TR22 x 5	22.0	19.114	15.294	2000.0	5.0	Steel
20151300	TR22 x 5	22.0	19.114	15.294	3000.0	5.0	Steel
20152284	TR22 x 10	22.0	19.058	15.294	1000.0	5.0	Steel
20152048	TR22 x 10	22.0	19.058	15.294	1500.0	5.0	Steel
20153113	TR22 x 10	22.0	19.058	15.294	2000.0	5.0	Steel
20152291	TR22 x 10	22.0	19.058	15.294	3000.0	5.0	Steel
20151294	TR22 x 5	22.0	19.114	15.294	1000.0	5.0	Steel
20152055	TR22 x 5	22.0	19.114	15.294	1500.0	5.0	Steel
20153359	TR22 x 5	22.0	19.114	15.294	2000.0	5.0	Steel
20151317	TR22 x 5	22.0	19.114	15.294	3000.0	5.0	Steel
20150389	TR22 x 5	22.0	19.114	15.294	1000.0	5.0	Stainless Steel
20150372	TR22 x 5	22.0	19.114	15.294	1500.0	5.0	Stainless Steel
20152789	TR22 x 5	22.0	19.114	15.294	2000.0	5.0	Stainless Steel
20150396	TR22 x 5	22.0	19.114	15.294	3000.0	5.0	Stainless Steel
20151331	TR24 x 5	24.0	21.094	17.269	1000.0	5.0	Steel
20151324	TR24 x 5	24.0	21.094	17.269	1500.0	5.0	Steel
20153120	TR24 x 5	24.0	21.094	17.269	2000.0	5.0	Steel
20151355	TR24 x 5	24.0	21.094	17.269	3000.0	5.0	Steel
20152307	TR24 x 10	24.0	21.058	17.269	1000.0	5.0	Steel
20152062	TR24 x 10	24.0	21.094	17.269	1500.0	5.0	Steel
20153137	TR24 x 10	24.0	21.094	17.269	2000.0	5.0	Steel
20152314	TR24 x 10	24.0	21.094	17.269	3000.0	5.0	Steel

Lead Screws

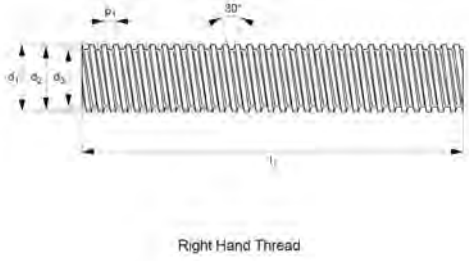

Right Hand Thread

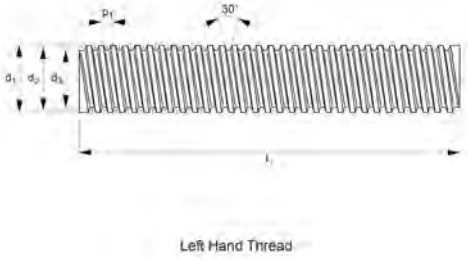

Left Hand Thread



Part Number	Thread Size	d1 tol. 7e	d2 tol. 7e min	d3 tol. 7h min	l1	p1	Material
20151348	TR24 x 5	24.0	21.094	17.269	1000.0	5.0	Steel
20152079	TR24 x 5	24.0	21.094	17.269	1500.0	5.0	Steel
20153366	TR24 x 5	24.0	21.094	17.269	2000.0	5.0	Steel
20151362	TR24 x 5	24.0	21.094	17.269	3000.0	5.0	Steel
20150419	TR24 x 5	24.0	21.094	17.269	1000.0	5.0	Stainless Steel
20152543	TR24 x 5	24.0	21.094	17.269	1500.0	5.0	Stainless Steel
20152673	TR24 x 5	24.0	21.094	17.269	2000.0	5.0	Stainless Steel
20150433	TR24 x 5	24.0	21.094	17.269	3000.0	5.0	Stainless Steel
20150426	TR24 x 5	24.0	21.094	17.269	1000.0	5.0	Stainless Steel
20150402	TR24 x 5	24.0	21.094	17.269	1500.0	5.0	Stainless Steel
20152901	TR24 x 5	24.0	21.094	17.269	2000.0	5.0	Stainless Steel
20150440	TR24 x 5	24.0	21.094	17.269	3000.0	5.0	Stainless Steel
20151386	TR26 x 5	26.0	23.094	19.269	1000.0	5.0	Steel
20151379	TR26 x 5	26.0	23.094	19.269	1500.0	5.0	Steel
20152642	TR26 x 5	26.0	23.094	19.269	2000.0	5.0	Steel
20151409	TR26 x 5	26.0	23.094	19.269	13000.0	5.0	Steel
20152321	TR26 x 10	26.0	23.058	19.269	1000.0	5.0	Steel
20152086	TR26 x 10	26.0	23.094	19.269	1500.0	5.0	Steel
20153144	TR26 x 10	26.0	23.094	19.269	2000.0	5.0	Steel
20152338	TR26 x 10	26.0	23.094	19.269	3000.0	5.0	Steel
20151393	TR26 x 5	26.0	23.094	19.269	1000.0	5.0	Steel
20152093	TR26 x 5	26.0	23.094	19.269	1500.0	5.0	Steel

Lead Screws

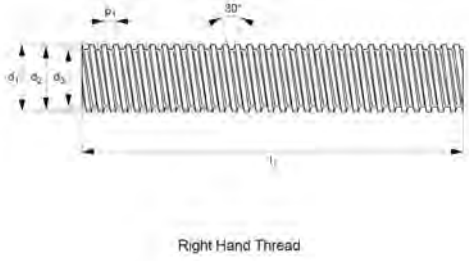

Right Hand Thread

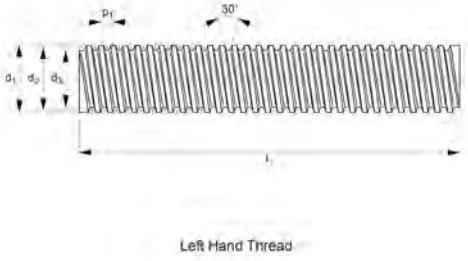

Left Hand Thread



Part Number	Thread Size	d1 tol. 7e	d2 tol. 7e min	d3 tol. 7h min	l1	p1	Material
20153373	TR26 x 5	26.0	23.094	19.269	2000.0	5.0	Steel
20151416	TR26 x 5	26.0	23.094	19.269	3000.0	5.0	Steel
20150464	TR26 x 5	26.0	23.094	19.269	1000.0	5.0	Stainless Steel
20150457	TR26 x 5	26.0	23.094	19.269	1500.0	5.0	Stainless Steel
20152796	TR26 x 5	26.0	23.094	19.269	2000.0	5.0	Stainless Steel
20150471	TR26 x 5	26.0	23.094	19.269	3000.0	5.0	Stainless Steel
20151430	TR28 x 5	28.0	25.094	21.269	1000.0	5.0	Steel
20151423	TR28 x 5	28.0	25.094	21.269	1500.0	5.0	Steel
20153151	TR28 x 5	28.0	25.094	21.269	2000.0	5.0	Steel
20151454	TR28 x 5	28.0	25.094	21.269	3000.0	5.0	Steel
20152345	TR28 x 10	28.0	25.058	21.269	1000.0	5.0	Steel
20152109	TR28 x 10	28.0	25.094	21.269	1500.0	5.0	Steel
20153168	TR28 x 10	28.0	25.094	21.269	2000.0	5.0	Steel
20152352	TR28 x 10	28.0	25.094	21.269	3000.0	5.0	Steel
20151447	TR28 x 5	28.0	25.094	21.269	1000.0	5.0	Steel
20152116	TR28 x 5	28.0	25.094	21.269	1500.0	5.0	Steel
20153380	TR28 x 5	28.0	25.094	21.269	2000.0	5.0	Steel
20151461	TR28 x 5	28.0	25.094	21.269	3000.0	5.0	Steel
20150495	TR28 x 5	28.0	25.094	21.269	1000.0	5.0	Stainless Steel
20150488	TR28 x 5	28.0	25.094	21.269	1500.0	5.0	Stainless Steel
20152802	TR28 x 5	28.0	25.094	21.269	2000.0	5.0	Stainless Steel
20150501	TR28 x 5	28.0	25.094	21.269	3000.0	5.0	Stainless Steel

Lead Screws

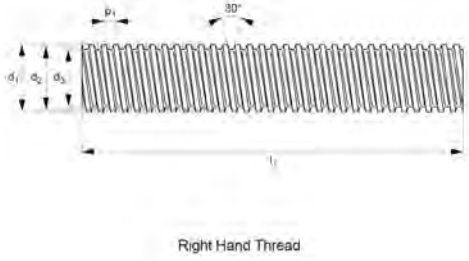

Right Hand Thread

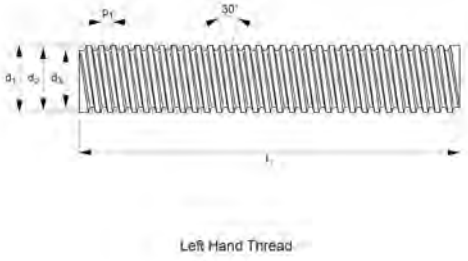

Left Hand Thread



Part Number	Thread Size	d1 tol. 7e	d2 tol. 7e min	d3 tol. 7h min	l1	p1	Material
20151485	TR30 x 6	30.0	26.547	21.563	1000.0	6.0	Steel
20151478	TR30 x 6	30.0	26.547	21.563	1500.0	6.0	Steel
20152697	TR30 x 6	30.0	26.547	21.563	2000.0	6.0	Steel
20151492	TR30 x 6	30.0	26.547	21.563	3000.0	6.0	Steel
20152369	TR30 x 12	30.0	26.058	21.563	1000.0	6.0	Steel
20152123	TR30 x 12	30.0	26.547	21.563	1500.0	6.0	Steel
20153175	TR30 x 12	30.0	26.547	21.563	2000.0	6.0	Steel
20152376	TR30 x 12	30.0	26.547	21.563	3000.0	6.0	Steel
20152628	TR30 x 6	30.0	26.547	21.563	1000.0	6.0	Steel
20152130	TR30 x 6	30.0	26.547	21.563	1500.0	6.0	Steel
20152703	TR30 x 6	30.0	26.547	21.563	2000.0	6.0	Steel
20151508	TR30 x 6	30.0	26.547	21.563	3000.0	6.0	Steel
20150525	TR30 x 6	30.0	26.547	21.563	1000.0	6.0	Stainless Steel
20152550	TR30 x 6	30.0	26.547	21.563	1500.0	6.0	Stainless Steel
20152819	TR30 x 6	30.0	26.547	21.563	2000.0	6.0	Stainless Steel
20150549	TR30 x 6	30.0	26.547	21.563	3000.0	6.0	Stainless Steel
20150532	TR30 x 6	30.0	26.547	21.563	1000.0	6.0	Stainless Steel
20150518	TR30 x 6	30.0	26.547	21.563	1500.0	6.0	Stainless Steel
20152918	TR30 x 6	30.0	26.547	21.563	2000.0	6.0	Stainless Steel
20150556	TR30 x 6	30.0	26.547	21.563	3000.0	6.0	Stainless Steel
20151515	TR32 x 6	32.0	28.547	23.563	1000.0	6.0	Steel
20152635	TR32 x 6	32.0	28.547	23.563	1500.0	6.0	Steel

Lead Screws

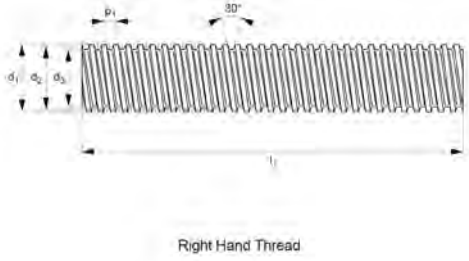

Right Hand Thread

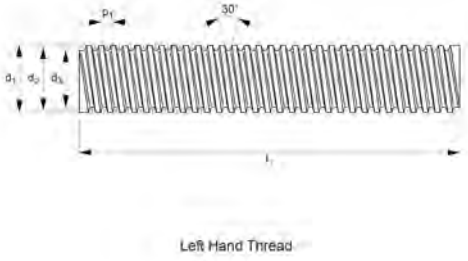

Left Hand Thread



Part Number	Thread Size	d1 tol. 7e	d2 tol. 7e min	d3 tol. 7h min	l1	p1	Material
20152659	TR32 x 6	32.0	28.547	23.563	2000.0	6.0	Steel
20151539	TR32 x 6	32.0	28.547	23.563	3000.0	6.0	Steel
20152383	TR32 x 12	32.0	28.507	23.563	1000.0	6.0	Steel
20152147	TR32 x 12	32.0	28.547	23.563	1500.0	6.0	Steel
20152666	TR32 x 12	32.0	28.547	23.563	2000.0	6.0	Steel
20152390	TR32 x 12	32.0	28.547	23.563	3000.0	6.0	Steel
20151522	TR32 x 6	32.0	28.547	23.563	1000.0	6.0	Steel
20152154	TR32 x 6	32.0	28.547	23.563	1500.0	6.0	Steel
20153397	TR32 x 6	32.0	28.547	23.563	2000.0	6.0	Steel
20151546	TR32 x 6	32.0	28.547	23.563	3000.0	6.0	Steel
20150570	TR32 x 6	32.0	28.547	23.563	1000.0	6.0	Stainless Steel
20152567	TR32 x 6	32.0	28.547	23.563	1500.0	6.0	Stainless Steel
20152826	TR32 x 6	32.0	28.547	23.563	2000.0	6.0	Stainless Steel
20150594	TR32 x 6	32.0	28.547	23.563	3000.0	6.0	Stainless Steel
20150587	TR32 x 6	32.0	28.547	23.563	1000.0	6.0	Stainless Steel
20150563	TR32 x 6	32.0	28.547	23.563	1500.0	6.0	Stainless Steel
20152925	TR32 x 6	32.0	28.547	23.563	2000.0	6.0	Stainless Steel
20150600	TR32 x 6	32.0	28.547	23.563	3000.0	6.0	Stainless Steel
20151560	TR36 x 6	36.0	32.547	27.563	1000.0	6.0	Steel
20151553	TR36 x 6	36.0	32.547	27.563	1500.0	6.0	Steel
20153182	TR36 x 6	36.0	32.547	27.563	2000.0	6.0	Steel
20151584	TR36 x 6	36.0	32.547	27.563	3000.0	6.0	Steel

Lead Screws

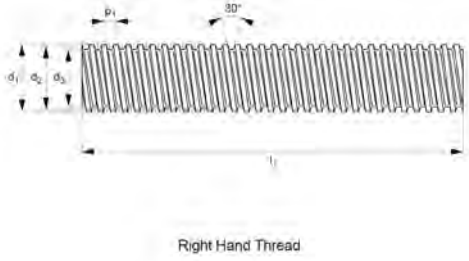

Right Hand Thread

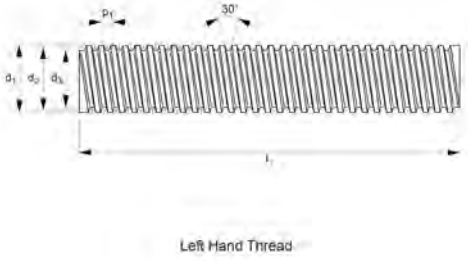

Left Hand Thread



Part Number	Thread Size	d1 tol. 7e	d2 tol. 7e min	d3 tol. 7h min	l1	p1	Material
20152406	TR36 x 12	36.0	32.507	27.563	1000.0	6.0	Steel
20152161	TR36 x 12	36.0	32.547	27.563	1500.0	6.0	Steel
20153199	TR36 x 12	36.0	32.547	27.563	2000.0	6.0	Steel
20152413	TR36 x 12	36.0	32.547	27.563	3000.0	6.0	Steel
20151577	TR36 x 6	36.0	32.547	27.563	1000.0	6.0	Steel
20152178	TR36 x 6	36.0	32.547	27.563	1500.0	6.0	Steel
20153403	TR36 x 6	36.0	32.547	27.563	2000.0	6.0	Steel
20151591	TR36 x 6	36.0	32.547	27.563	3000.0	6.0	Steel
20150617	TR36 x 6	36.0	32.547	27.563	1000.0	6.0	Stainless Steel
20152574	TR36 x 6	36.0	32.547	27.563	1500.0	6.0	Stainless Steel
20152833	TR36 x 6	36.0	32.547	27.563	2000.0	6.0	Stainless Steel
20150631	TR36 x 6	36.0	32.547	27.563	3000.0	6.0	Stainless Steel
20150624	TR36 x 6	36.0	32.547	27.563	1000.0	6.0	Stainless Steel
20152611	TR36 x 6	36.0	32.547	27.563	1500.0	6.0	Stainless Steel
20152932	TR36 x 6	36.0	32.547	27.563	2000.0	6.0	Stainless Steel
20150648	TR36 x 6	36.0	32.547	27.563	3000.0	6.0	Stainless Steel
20151614	TR40 x 7	40.0	36.020	30.381	1000.0	7.0	Steel
20151607	TR40 x 7	40.0	36.020	30.381	1500.0	7.0	Steel
20152680	TR40 x 7	40.0	36.020	30.381	2000.0	7.0	Steel
20151638	TR40 x 7	40.0	36.020	30.381	3000.0	7.0	Steel
20152420	TR40 x 14	40.0	35.977	30.381	1000.0	7.0	Steel
20152185	TR40 x 14	40.0	36.020	30.381	1500.0	7.0	Steel

Lead Screws

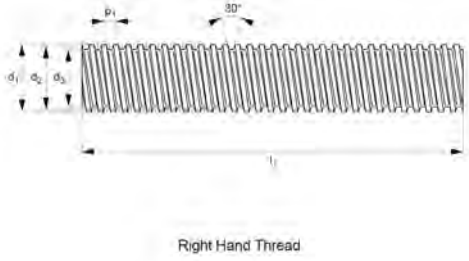

Right Hand Thread

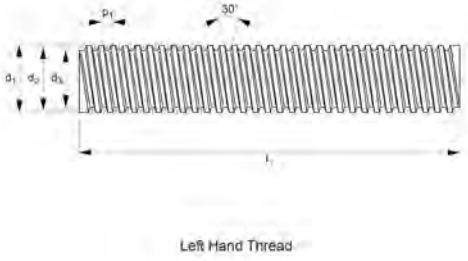

Left Hand Thread



Part Number	Thread Size	d1 tol. 7e	d2 tol. 7e min	d3 tol. 7h min	l1	p1	Material
20153205	TR40 x 14	40.0	36.020	30.381	2000.0	7.0	Steel
20153519	TR40 x 14	40.0	36.020	30.381	3000.0	7.0	Steel
20151621	TR40 x 7	40.0	36.020	30.381	1000.0	7.0	Steel
20152192	TR40 x 7	40.0	36.020	30.381	1500.0	7.0	Steel
20153410	TR40 x 7	40.0	36.020	30.381	2000.0	7.0	Steel
20151645	TR40 x 7	40.0	36.020	30.381	3000.0	7.0	Steel
20150662	TR40 x 7	40.0	36.020	30.381	1000.0	7.0	Stainless Steel
20152581	TR40 x 7	40.0	36.020	30.381	1500.0	7.0	Stainless Steel
20152727	TR40 x 7	40.0	36.020	30.381	2000.0	7.0	Stainless Steel
20150686	TR40 x 7	40.0	36.020	30.381	3000.0	7.0	Stainless Steel
20150679	TR40 x 7	40.0	36.020	30.381	1000.0	7.0	Stainless Steel
20150655	TR40 x 7	40.0	36.020	30.381	1500.0	7.0	Stainless Steel
20152949	TR40 x 7	40.0	36.020	30.381	2000.0	7.0	Stainless Steel
20150693	TR40 x 7	40.0	36.020	30.381	3000.0	7.0	Stainless Steel
20151669	TR44 x 7	44.0	40.020	34.381	1000.0	7.0	Steel
20151652	TR44 x 7	44.0	40.020	34.381	1500.0	7.0	Steel
20153212	TR44 x 7	44.0	40.020	34.381	2000.0	7.0	Steel
20151683	TR44 x 7	44.0	40.020	34.381	3000.0	7.0	Steel
20153908	TR44 x 14	44.0	39.977	34.381	1000.0	7.0	Steel
20153915	TR44 x 14	44.0	39.977	34.381	1500.0	7.0	Steel
20153922	TR44 x 14	44.0	39.977	34.381	2000.0	7.0	Steel
20153939	TR44 x 14	44.0	39.977	34.381	3000.0	7.0	Steel

Lead Screws

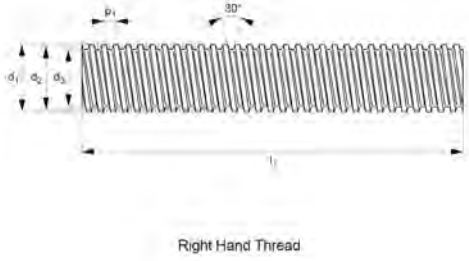

Right Hand Thread

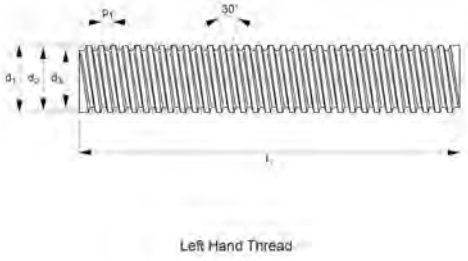

Left Hand Thread



Part Number	Thread Size	d1 tol. 7e	d2 tol. 7e min	d3 tol. 7h min	l1	p1	Material
20151676	TR44 x 7	44.0	40.020	34.381	1000.0	7.0	Steel
20152208	TR44 x 7	44.0	40.020	34.381	1500.0	7.0	Steel
20153427	TR44 x 7	44.0	40.020	34.381	2000.0	7.0	Steel
20151690	TR44 x 7	44.0	40.020	34.381	3000.0	7.0	Steel
20151713	TR50 x 8	50.0	45.468	39.168	1000.0	8.0	Steel
20151706	TR50 x 8	50.0	45.468	39.168	1500.0	8.0	Steel
20153229	TR50 x 8	50.0	45.468	39.168	2000.0	8.0	Steel
20151737	TR50 x 8	50.0	45.468	39.168	3000.0	8.0	Steel
20151720	TR50 x 8	50.0	45.468	39.168	1000.0	8.0	Steel
20152215	TR50 x 8	50.0	45.468	39.168	1500.0	8.0	Steel
20153434	TR50 x 8	50.0	45.468	39.168	2000.0	8.0	Steel
20151744	TR50 x 8	50.0	45.468	39.168	3000.0	8.0	Steel
20150709	TR50 x 8	50.0	45.468	39.168	1000.0	8.0	Stainless Steel
20152598	TR50 x 8	50.0	45.468	39.168	1500.0	8.0	Stainless Steel
20152840	TR50 x 8	50.0	45.468	39.168	2000.0	8.0	Stainless Steel
20150723	TR50 x 8	50.0	45.468	39.168	3000.0	8.0	Stainless Steel
20151768	TR55 x 9	55.0	49.935	42.979	1000.0	9.0	Steel
20151751	TR55 x 9	55.0	49.935	42.979	1500.0	9.0	Steel
20153236	TR55 x 9	55.0	49.935	42.979	2000.0	9.0	Steel
20151775	TR55 x 9	55.0	49.935	42.979	3000.0	9.0	Steel
20151799	TR60 x 9	60.0	54.935	47.979	1000.0	9.0	Steel
20151782	TR60 x 9	60.0	54.935	47.979	1500.0	9.0	Steel

Lead Screws

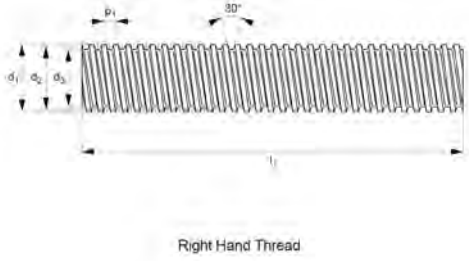

Right Hand Thread

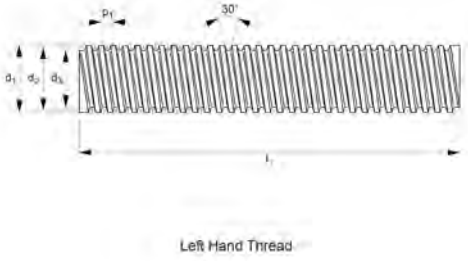

Left Hand Thread



Part Number	Thread Size	d1 tol. 7e	d2 tol. 7e min	d3 tol. 7h min	l1	p1	Material
20153243	TR60 x 9	60.0	54.935	47.979	2000.0	9.0	Steel
20151812	TR60 x 9	60.0	54.935	47.979	3000.0	9.0	Steel
20151805	TR60 x 9	60.0	54.935	47.979	1000.0	9.0	Steel
20152222	TR60 x 9	60.0	54.935	47.979	1500.0	9.0	Steel
20153441	TR60 x 9	60.0	54.935	47.979	2000.0	9.0	Steel
20151829	TR60 x 9	60.0	54.935	47.979	3000.0	9.0	Steel
20150754	TR60 x 9	60.0	54.935	47.979	1000.0	9.0	Stainless Steel
20152604	TR60 x 9	60.0	54.935	47.979	1500.0	9.0	Stainless Steel
20152857	TR60 x 9	60.0	54.935	47.979	2000.0	9.0	Stainless Steel
20150778	TR60 x 9	60.0	54.935	47.979	3000.0	9.0	Stainless Steel
20150761	TR60 x 9	60.0	54.935	47.979	1000.0	9.0	Stainless Steel
20150747	TR60 x 9	60.0	54.935	47.979	1500.0	9.0	Stainless Steel
20152963	TR60 x 9	60.0	54.935	47.979	2000.0	9.0	Stainless Steel
20150785	TR60 x 9	60.0	54.935	47.979	3000.0	9.0	Stainless Steel
20151836	TR70 x 10	70.0	64.425	56.819	1000.0	10.0	Steel
20152437	TR70 x 10	70.0	64.425	56.819	1500.0	10.0	Steel
20153250	TR70 x 10	70.0	64.425	56.819	2000.0	10.0	Steel
20151843	TR70 x 10	70.0	64.425	56.819	3000.0	10.0	Steel
20152444	TR70 x 10	70.0	64.425	56.819	1000.0	10.0	Steel
20152239	TR70 x 10	70.0	64.425	56.819	1500.0	10.0	Steel
20153458	TR70 x 10	70.0	64.425	56.819	2000.0	10.0	Steel
20152451	TR70 x 10	70.0	64.425	56.819	3000.0	10.0	Steel

Lead Screws

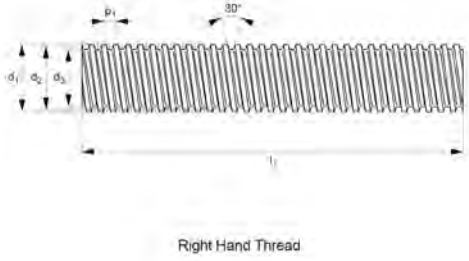

Right Hand Thread

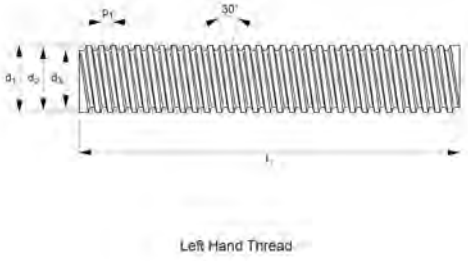

Left Hand Thread



Part Number	Thread Size	d1 tol. 7e	d2 tol. 7e min	d3 tol. 7h min	l1	p1	Material
20150808	TR70 x 10	70.0	64.425	56.819	1000.0	10.0	Stainless Steel
20150822	TR70 x 10	70.0	64.425	56.819	1500.0	10.0	Stainless Steel
20152864	TR70 x 10	70.0	64.425	56.819	2000.0	10.0	Stainless Steel
20150815	TR70 x 10	70.0	64.425	56.819	3000.0	10.0	Stainless Steel
20150839	TR70 x 10	70.0	64.425	56.819	1000.0	10.0	Stainless Steel
20150792	TR70 x 10	70.0	64.425	56.819	1500.0	10.0	Stainless Steel
20152970	TR70 x 10	70.0	64.425	56.819	2000.0	10.0	Stainless Steel
20150846	TR70 x 10	70.0	64.425	56.819	3000.0	10.0	Stainless Steel
20151850	TR80 x 10	80.0	74.425	66.819	1000.0	10.0	Steel
20152468	TR80 x 10	80.0	74.425	66.819	1500.0	10.0	Steel
20153267	TR80 x 10	80.0	74.425	66.819	2000.0	10.0	Steel
20151867	TR80 x 10	80.0	74.425	66.819	3000.0	10.0	Steel
20152475	TR80 x 10	80.0	74.425	66.819	1000.0	10.0	Steel
20152246	TR80 x 10	80.0	74.425	66.819	1500.0	10.0	Steel
20153465	TR80 x 10	80.0	74.425	66.819	2000.0	10.0	Steel
20152482	TR80 x 10	80.0	74.425	66.819	3000.0	10.0	Steel
20151874	TR90 x 12	90.0	83.365	74.446	1000.0	12.0	Steel
20152499	TR90 x 12	90.0	83.365	74.446	1500.0	12.0	Steel
20153274	TR90 x 12	90.0	83.365	74.446	2000.0	12.0	Steel
20151881	TR90 x 12	90.0	83.365	74.446	3000.0	12.0	Steel
20151898	TR95 x 16	95.0	86.250	73.710	1000.0	16.0	Steel
20152505	TR95 x 16	95.0	86.250	73.710	1500.0	16.0	Steel

Lead Screws

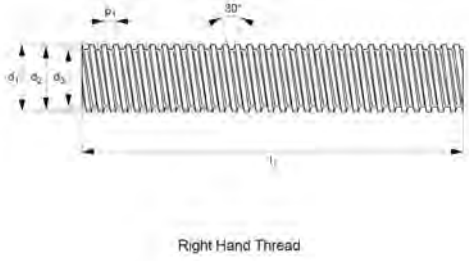

Right Hand Thread

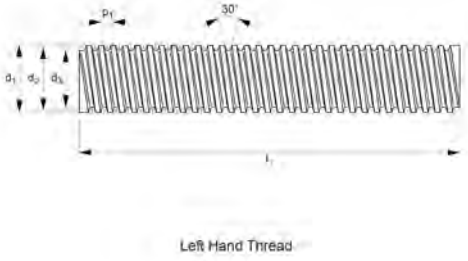

Left Hand Thread



Part Number	Thread Size	d1 tol. 7e	d2 tol. 7e min	d3 tol. 7h min	l1	p1	Material
20153281	TR95 x 16	95.0	86.250	73.710	2000.0	16.0	Steel
20151904	TR95 x 16	95.0	86.250	73.710	3000.0	16.0	Steel
20153496	TR100 x 16	100.0	91.250	78.710	1000.0	16.0	Steel
20151911	TR100 x 16	100.0	91.250	78.710	1500.0	16.0	Steel
20153489	TR100 x 16	100.0	91.250	78.710	2000.0	16.0	Steel
20150853	TR100 x 16	100.0	91.250	78.710	3000.0	16.0	Steel
20153502	TR120 x 16	120.0	111.25	98.710	1000.0	16.0	Steel
20151942	TR120 x 16	120.0	111.25	98.710	1500.0	16.0	Steel
20153007	TR120 x 16	120.0	111.25	98.710	2000.0	16.0	Steel
20150938	TR120 x 16	120.0	111.25	98.710	3000.0	16.0	Steel

Cylindrical Bronze Nuts

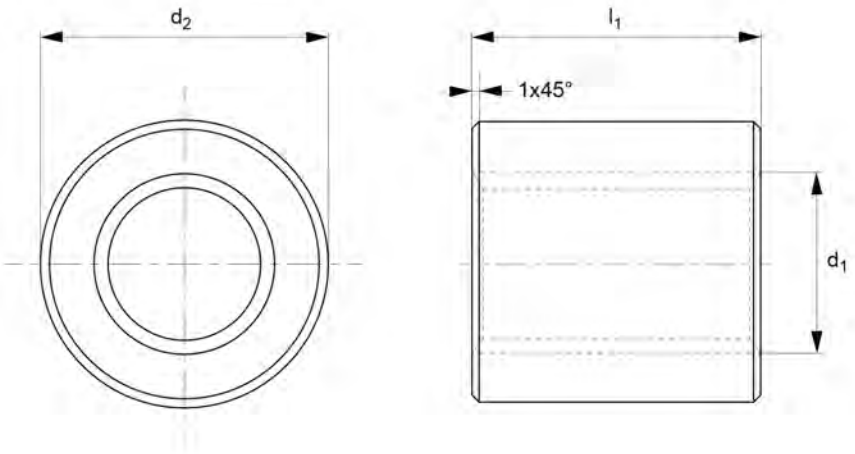

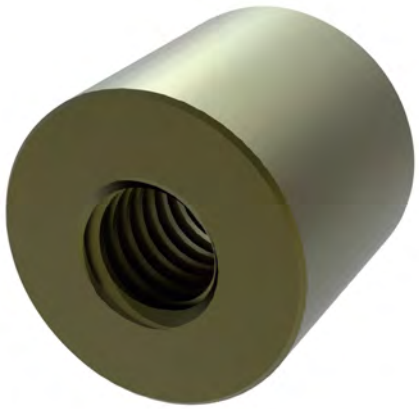

Features

- Available as standard right-hand thread cylindrical bronze nuts as well as left-hand threaded.
- Ideal for manual or motorised applications at low to medium rotation.
- It has internal threads that match the screw, which ensures exceptional durability and wear resistance due to the material.

Specifications

Material: Bronze

Cylindrical Bronze Nuts are used with our lead screws to convert rotary motion into linear motion. The nut is threaded onto the screw and moves along the length of the screw as it rotates, providing smooth and precise linear motion.

Ideal for manual or motorised applications at low to medium rotation. It has internal threads that match the screw, which ensures exceptional durability and wear resistance due to the material. Made of Bronze which has better corrosion resistance than steel but is less strong or heat resistant.

It is used in the automotive, aerospace or construction industries to secure lead screws in place. Available as standard right-hand thread cylindrical bronze nuts as well as left-hand threaded.

Cylindrical Bronze Nuts

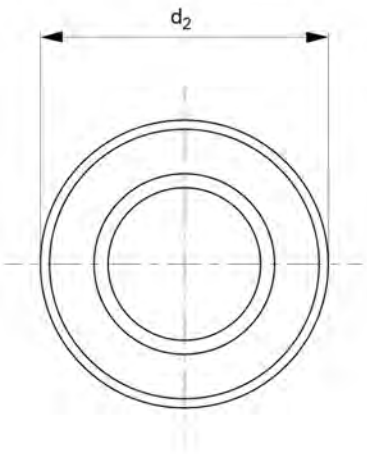

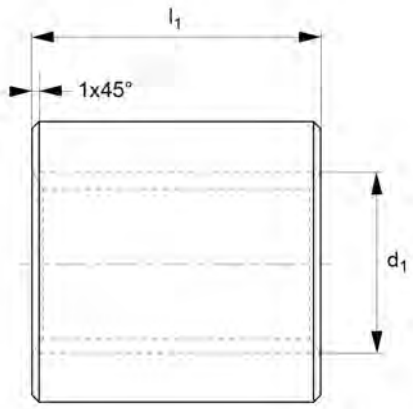

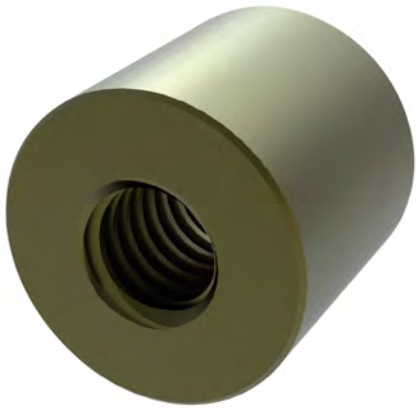

Part Number	Thread Size	d1 tol. 7H	d2 tol. h10	l1	Lead	Contact Surface	Thread Direction
20147747	TR10 x 2	10.0	22.0	20.0	2.0	200.0	Left Hand
20147730	TR10 x 2	10.0	22.0	20.0	2.0	200.0	Right Hand
20149604	TR10 x 4	10.0	22.0	20.0	4.0	200.0	Right Hand
20147761	TR12 x 3	12.0	26.0	24.0	3.0	280.0	Left Hand
20147754	TR12 x 3	12.0	26.0	24.0	3.0	280.0	Right Hand
20147778	TR12 x 6	12.0	26.0	24.0	6.0	280.0	Right Hand
20147792	TR14 x 3	14.0	30.0	28.0	3.0	380.0	Left Hand
20147785	TR14 x 3	14.0	30.0	28.0	3.0	380.0	Right Hand
20147808	TR14 x 6	14.0	30.0	28.0	6.0	380.0	Right Hand
20147822	TR16 x 3	16.0	36.0	32.0	4.0	490.0	Left Hand
20147815	TR16 x 4	16.0	36.0	32.0	4.0	490.0	Right Hand
20147839	TR16 x 8	16.0	36.0	32.0	8.0	490.0	Right Hand
20147853	TR18 x 4	18.0	40.0	36.0	4.0	630.0	Left Hand
20147846	TR18 x 4	18.0	40.0	36.0	4.0	630.0	Right Hand
20147860	TR18 x 8	18.0	40.0	36.0	8.0	630.0	Right Hand
20147884	TR20 x 4	20.0	45.0	40.0	4.0	790.0	Left Hand
20147877	TR20 x 4	20.0	45.0	40.0	4.0	790.0	Right Hand
20147891	TR20 x 8	20.0	45.0	40.0	8.0	790.0	Right Hand
20147921	TR22 x 5	22.0	45.0	44.0	5.0	940.0	Left Hand
20147914	TR22 x 5	22.0	45.0	44.0	5.0	940.0	Right Hand

Cylindrical Bronze Nuts

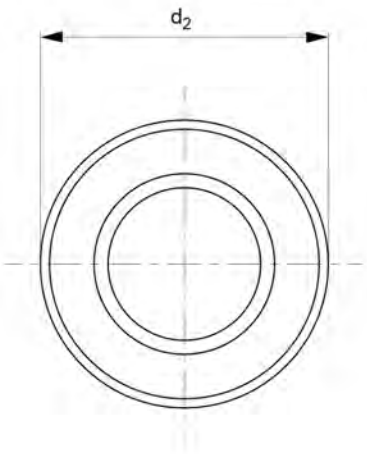

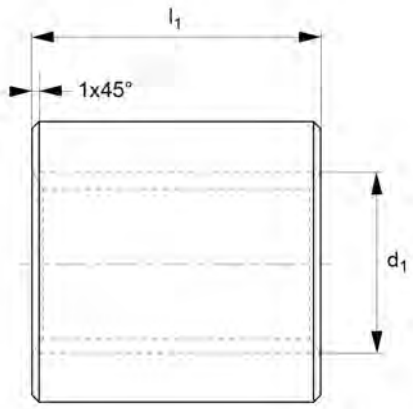

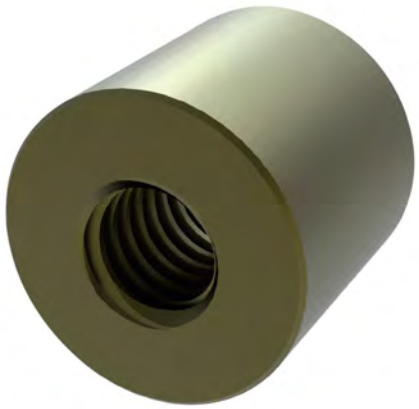

Part Number	Thread Size	d1 tol. 7H	d2 tol. h10	l1	Lead	Contact Surface	Thread Direction
20147907	TR22 x 10	22.0	45.0	44.0	10.0	940.0	Right Hand
20147952	TR24 x 5	24.0	50.0	48.0	5.0	1130.0	Left Hand
20147945	TR24 x 5	24.0	50.0	48.0	5.0	1130.0	Right Hand
20147938	TR24 x 10	24.0	50.0	48.0	10.0	1130.0	Right Hand
20147976	TR26 x 5	26.0	50.0	52.0	5.0	1340.0	Left Hand
20147969	TR26 x 5	26.0	50.0	52.0	5.0	1340.0	Right Hand
20148003	TR28 x 5	28.0	60.0	56.0	5.0	2400.0	Left Hand
20147990	TR28 x 5	28.0	60.0	56.0	5.0	240.0	Right Hand
20147983	TR28 x 10	28.0	60.0	56.0	10.0	1570.0	Right Hand
20148034	TR30 x 6	30.0	60.0	60.0	6.0	1780.0	Left Hand
20148027	TR30 x 6	30.0	60.0	60.0	6.0	1780.0	Right Hand
20148010	TR30 x 12	30.0	60.0	60.0	12.0	1780.0	Right Hand
20148065	TR32 x 6	32.0	60.0	64.0	6.0	1910.0	Left Hand
20148058	TR32 x 6	32.0	60.0	64.0	6.0	1910.0	Right Hand
20148041	TR32 x 12	32.0	60.0	64.0	12.0	1910.0	Right Hand
20148096	TR36 x 6	36.0	75.0	72.0	6.0	2610.0	Left Hand
20148089	TR36 x 6	36.0	75.0	72.0	6.0	2610.0	Right Hand
20148072	TR36 x 12	36.0	75.0	72.0	12.0	2610.0	Right Hand
20148126	TR40 x 7	40.0	80.0	80.0	7.0	3210.0	Left Hand
20148119	TR40 x 7	40.0	80.0	80.0	7.0	3210.0	Right Hand

Cylindrical Bronze Nuts

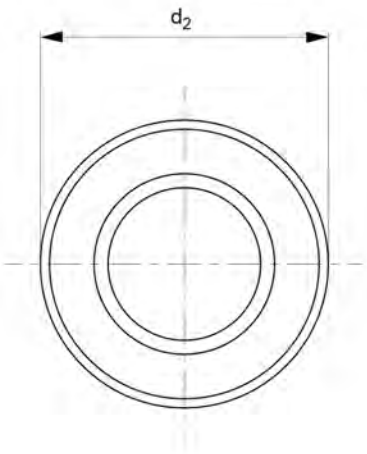

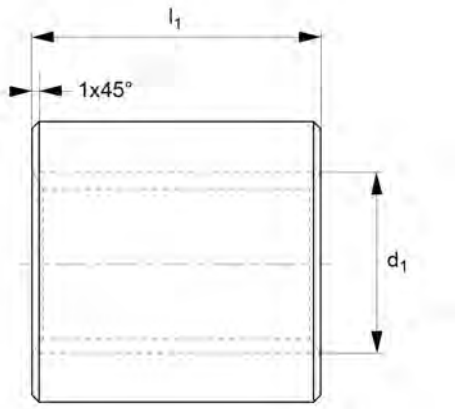

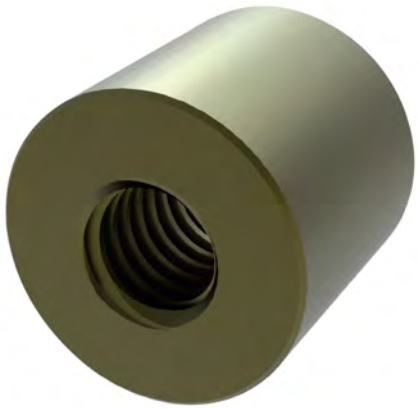

Part Number	Thread Size	d1 tol. 7H	d2 tol. h10	l1	Lead	Contact Surface	Thread Direction
20148102	TR40 x 14	40.0	80.0	80.0	14.0	3210.0	Right Hand
20148140	TR44 x 7	44.0	80.0	88.0	7.0	3920.0	Left Hand
20148133	TR44 x 7	44.0	80.0	88.0	7.0	3920.0	Right Hand
20148164	TR50 x 8	50.0	90.0	100.0	8.0	5060.0	Left Hand
20148157	TR50 x 8	50.0	90.0	100.0	8.0	5060.0	Right Hand
20148188	TR60 x 9	60.0	100.0	120.0	9.0	7320.0	Left Hand
20148171	TR60 x 9	60.0	100.0	120.0	9.0	7320.0	Right Hand
20148201	TR70 x 10	70.0	110.0	140.0	10.0	10000.0	Left Hand
20148195	TR70 x 10	70.0	110.0	140.0	10.0	10000.0	Right Hand
20149512	TR80 x 10	80.0	120.0	160.0	10.0	12950.0	Left Hand
20149505	TR80 x 10	80.0	120.0	160.0	10.0	12950.0	Right Hand

Flanged Bronze Nuts

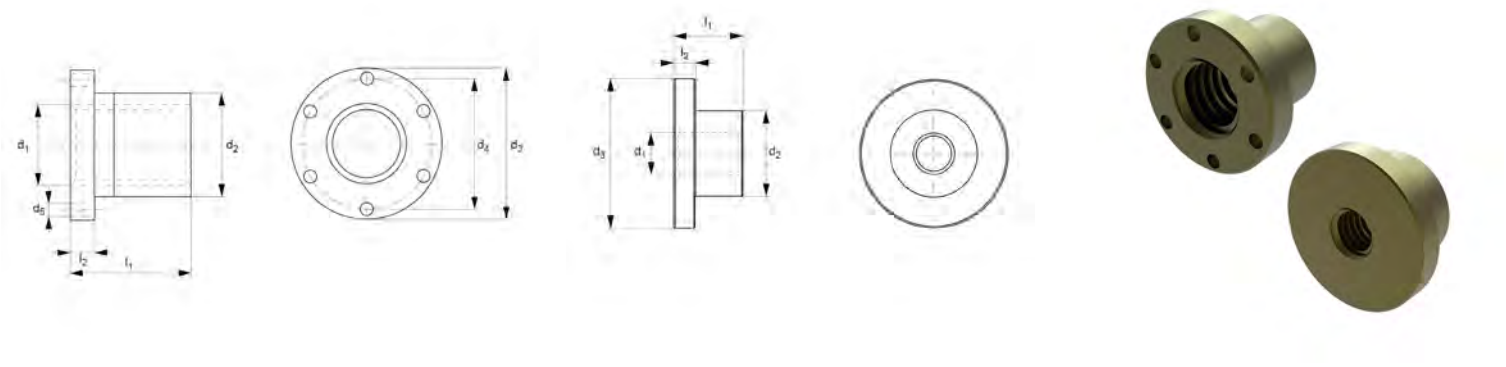

Features

- Flanged Bronze Nuts are an important part of lead screw assemblies
- It is intended for manual or motorised applications at low rotational speeds under load
- Available as standard right-hand thread flanged bronze nuts as well as left-hand threaded.

Specifications

Material: Bronze

Flanged Bronze Nuts are an important part of lead screw assemblies, extensively employed in linear motion systems. It is intended for manual or motorised applications at low rotational speeds under load, and it has a smooth surface that reduces lead screw wear.

They are extremely durable and have an element of self lubrication. The bronze material also assures dependable performance, making them one of the most popular nut choices in lead screw assemblies.

These are widely utilised in a variety of industrial applications, including in automotive, aerospace, and medical equipment. Available as standard right-hand thread flanged bronze nuts as well as left-hand threaded.

Flanged Bronze Nuts

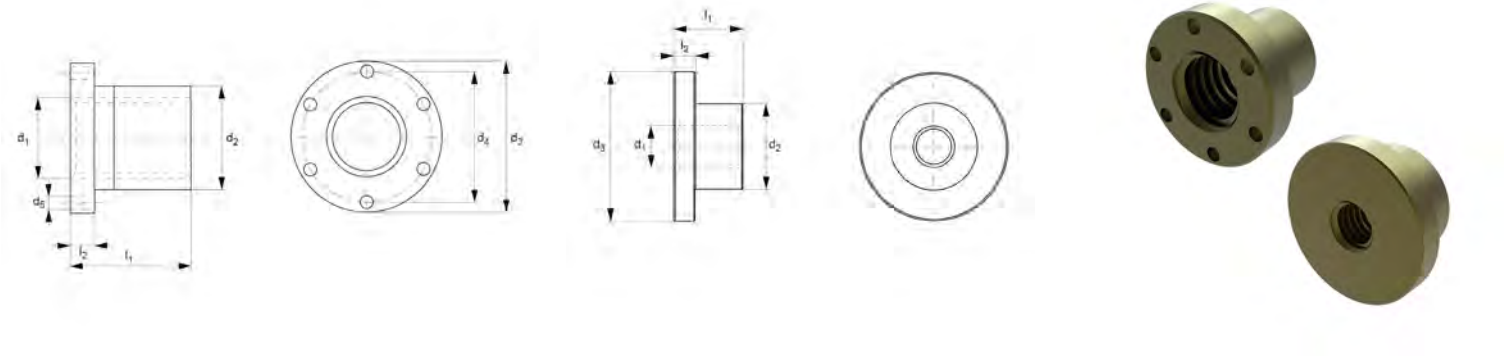

Part Number	Thread Size	d1 tol. 7H	d2 tol. H9	d3 tol. h11	l1	l2	No. of starts
20146610	TR10 x 2	10.0	25.0	42.0	25.0	10.0	1.0
20146603	TR10 x 2	10.0	25.0	42.0	25.0	10.0	1.0
20147099	TR10 x 2	10.0	20.0	35.0	15.0	6.0	1.0
20147082	TR10 x 2	10.0	20.0	35.0	15.0	6.0	1.0
20149666	TR10 x 4	10.0	25.0	42.0	25.0	10.0	2.0
20146634	TR12 x 3	12.0	28.0	48.0	35.0	12.0	1.0
20146627	TR12 x 3	12.0	28.0	48.0	35.0	12.0	1.0
20147112	TR12 x 3	12.0	24.0	42.0	20.0	7.0	1.0
20147105	TR12 x 3	12.0	24.0	42.0	20.0	7.0	1.0
20146641	TR12 x 6	12.0	28.0	48.0	35.0	12.0	2.0
20147129	TR12 x 6	12.0	24.0	42.0	20.0	7.0	2.0
20146665	TR14 x 3	14.0	28.0	48.0	35.0	12.0	1.0
20146658	TR14 x 3	14.0	28.0	48.0	35.0	12.0	1.0
20147143	TR14 x 3	14.0	30.0	52.0	24.0	10.0	1.0
20147136	TR14 x 3	14.0	30.0	52.0	24.0	10.0	1.0
20146672	TR14 x 6	14.0	28.0	48.0	35.0	12.0	2.0
20146696	TR16 x 4	16.0	28.0	48.0	35.0	12.0	1.0
20146689	TR16 x 4	16.0	28.0	48.0	35.0	12.0	1.0
20147167	TR16 x 4	16.0	30.0	52.0	24.0	10.0	1.0
20147150	TR16 x 4	16.0	30.0	52.0	24.0	10.0	1.0
20146702	TR16 x 8	16.0	28.0	48.0	35.0	12.0	2.0
20147174	TR16 x 8	16.0	30.0	52.0	24.0	12.0	2.0
20146726	TR18 x 4	18.0	28.0	48.0	35.0	12.0	1.0

Flanged Bronze Nuts

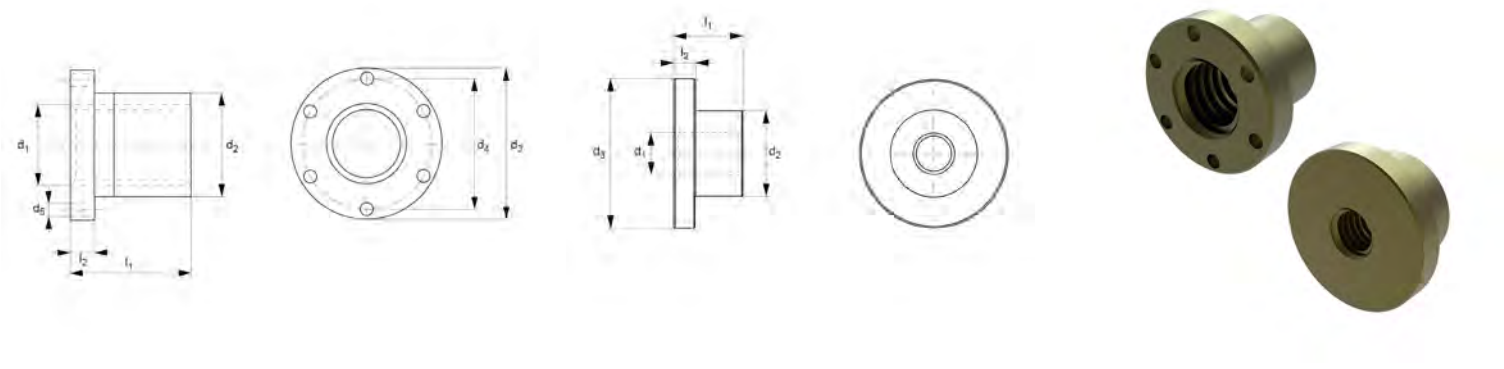

Part Number	Thread Size	d1 tol. 7H	d2 tol. H9	d3 tol. h11	l1	l2	No. of starts
20146719	TR18 x 4	18.0	28.0	48.0	35.0	12.0	1.0
20146733	TR18 x 8	18.0	28.0	48.0	35.0	12.0	2.0
20146757	TR20 x 4	20.0	32.0	55.0	44.0	12.0	1.0
20146740	TR20 x 4	20.0	32.0	55.0	44.0	12.0	1.0
20147198	TR20 x 4	20.0	38.0	62.0	26.0	11.0	1.0
20147181	TR20 x 4	20.0	38.0	62.0	26.0	11.0	1.0
20146764	TR20 x 8	20.0	32.0	55.0	44.0	12.0	2.0
20147204	TR20 x 8	20.0	38.0	62.0	26.0	12.0	2.0
20146795	TR22 x 5	22.0	32.0	55.0	44.0	12.0	1.0
20146788	TR22 x 5	22.0	32.0	55.0	44.0	12.0	1.0
20146771	TR22 x10	22.0	32.0	55.0	44.0	12.0	2.0
20146825	TR24 x 5	24.0	32.0	55.0	44.0	12.0	1.0
20146818	TR24 x 5	24.0	32.0	55.0	44.0	12.0	1.0
20147235	TR24 x 5	24.0	50.0	77.0	33.0	13.0	1.0
20147228	TR24 x 5	24.0	50.0	77.0	33.0	13.0	1.0
20147211	TR24 x 10	24.0	50.0	77.0	33.0	12.0	2.0
20146801	TR24 x10	24.0	32.0	55.0	44.0	12.0	2.0
20146849	TR26 x 5	26.0	38.0	62.0	46.0	14.0	1.0
20146832	TR26 x 5	26.0	38.0	62.0	46.0	14.0	1.0
20149581	TR26 x 10	26.0	38.0	62.0	46.0	14.0	2.0
20146870	TR28 x 5	28.0	38.0	62.0	46.0	14.0	1.0
20146863	TR28 x 5	28.0	38.0	62.0	46.0	14.0	1.0
20146856	TR28 x 10	28.0	38.0	62.0	46.0	14.0	2.0

Flanged Bronze Nuts

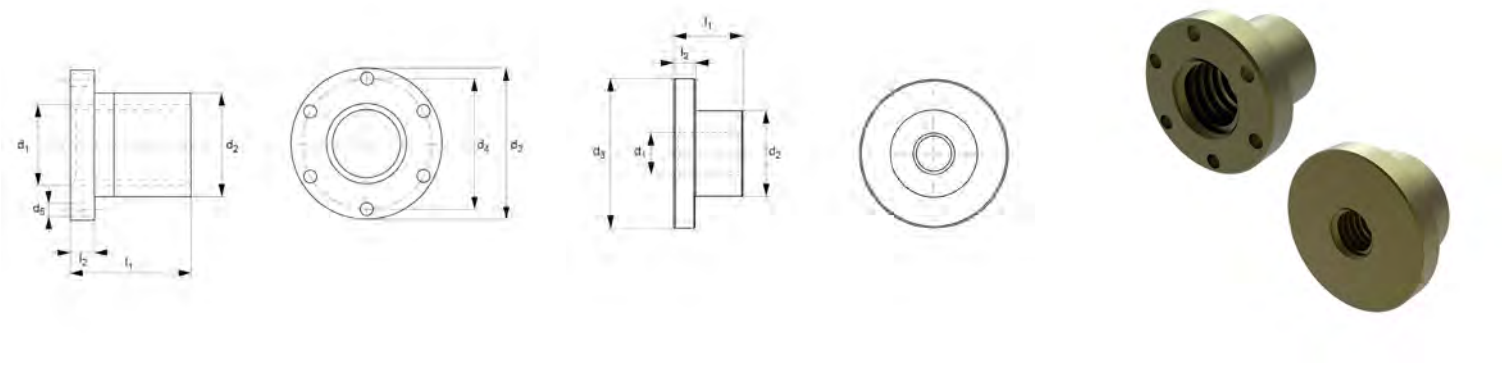

Part Number	Thread Size	d1 tol. 7H	d2 tol. H9	d3 tol. h11	l1	l2	No. of starts
20146900	TR30 x 6	30.0	38.0	62.0	46.0	14.0	1.0
20146894	TR30 x 6	30.0	38.0	62.0	46.0	14.0	1.0
20147266	TR30 x 6	30.0	58.0	90.0	48.0	15.0	1.0
20147259	TR30 x 6	30.0	58.0	90.0	48.0	15.0	1.0
20147242	TR30 x 12	30.0	58.0	90.0	48.0	14.0	2.0
20146887	TR30 x12	30.0	38.0	62.0	46.0	14.0	2.0
20146931	TR32 x 6	32.0	45.0	70.0	54.0	16.0	1.0
20146924	TR32 x 6	32.0	45.0	70.0	54.0	16.0	1.0
20146917	TR32 x 12	32.0	45.0	70.0	54.0	16.0	2.0
20146962	TR36 x 6	36.0	45.0	70.0	54.0	16.0	1.0
20146955	TR36 x 6	36.0	45.0	70.0	54.0	16.0	1.0
20147297	TR36 x 6	36.0	80.0	115.0	60.0	20.0	1.0
20147280	TR36 x 6	36.0	80.0	115.0	60.0	20.0	1.0
20146948	TR36 x 12	36.0	45.0	70.0	54.0	16.0	2.0
20147273	TR36 x 12	36.0	80.0	115.0	60.0	16.0	2.0
20146993	TR40 x 7	40.0	63.0	95.0	66.0	16.0	1.0
20146986	TR40 x 7	40.0	63.0	95.0	66.0	16.0	1.0
20147327	TR40 x 7	40.0	80.0	140.0	65.0	20.0	1.0
20147310	TR40 x 7	40.0	80.0	140.0	65.0	20.0	1.0
20146979	TR40 x 14	40.0	63.0	95.0	66.0	16.0	2.0
20147303	TR40 x 14	40.0	80.0	140.0	65.0	16.0	2.0
20147013	TR44 x 7	44.0	63.0	95.0	66.0	16.0	1.0
20147006	TR44 x 7	44.0	63.0	95.0	66.0	16.0	1.0

Flanged Bronze Nuts

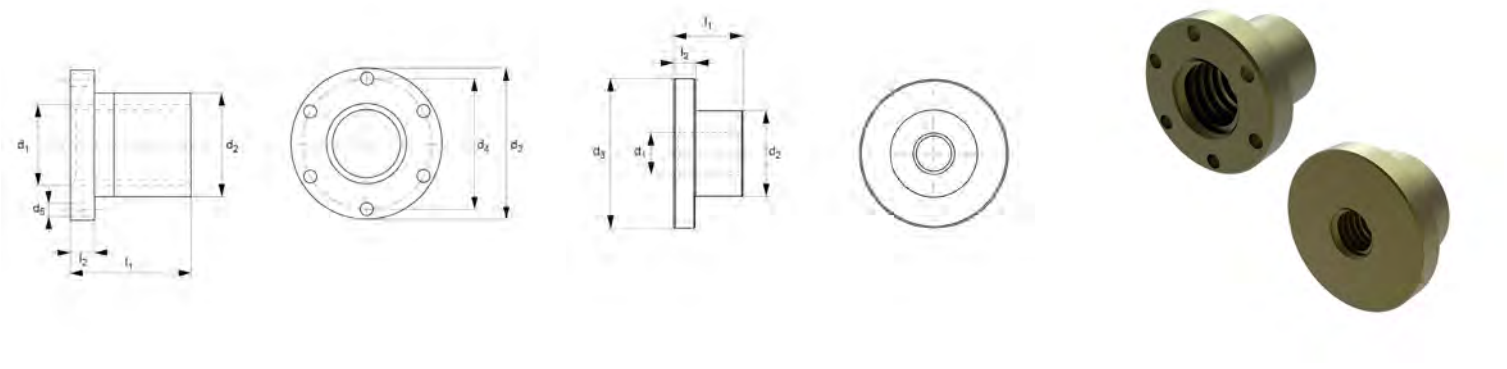

Part Number	Thread Size	d1 tol. 7H	d2 tol. H9	d3 tol. h11	l1	l2	No. of starts
20147037	TR50 x 8	50.0	72.0	110.0	75.0	18.0	1.0
20147020	TR50 x 8	50.0	72.0	110.0	75.0	18.0	1.0
20147341	TR50 x 8	50.0	90.0	170.0	70.0	20.0	1.0
20147334	TR50 x 8	50.0	90.0	170.0	70.0	20.0	1.0
20147051	TR60 x 9	60.0	88.0	130.0	90.0	20.0	1.0
20147044	TR60 x 9	60.0	88.0	130.0	90.0	20.0	1.0
20147075	TR70 x 10	70.0	95.0	140.0	105.0	22.0	1.0
20147068	TR70 x 10	70.0	95.0	140.0	105.0	22.0	1.0

Cylindrical Steel Nuts

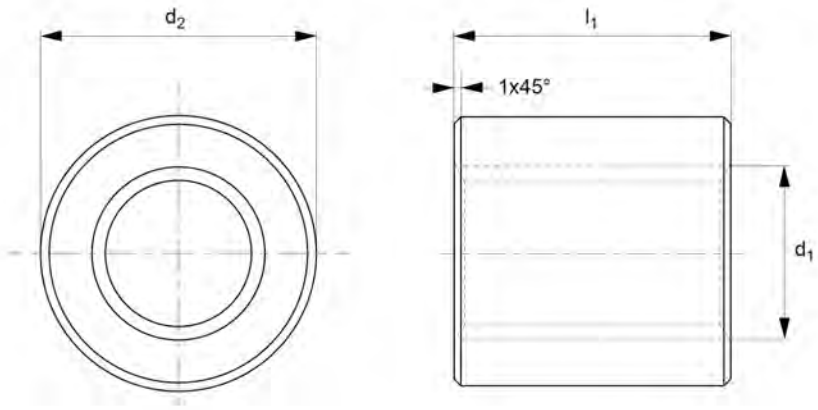



Features

- The nut is threaded onto the screw and moves along the length of the screw as it rotates
- It is used in the automotive, aerospace or construction industries
- Available as standard right-hand thread cylindrical steel nuts as well as left-hand threaded.

Specifications

Material: Steel

Cylindrical Steel Nuts are fasteners that are commonly used in conjunction with lead screws or ball screws to convert rotary motion to linear motion. The nut is threaded onto the screw and moves along the length of the screw as it rotates, providing smooth and precise linear motion.

They are used for low rotational speeds, manual control, and clamping functions. It is not suitable for motorised movements. It has internal threads that match the screw, which ensures exceptional durability and wear resistance due to the material.

It is used in the automotive, aerospace or construction industries to secure lead screws in place. Available as standard right-hand thread cylindrical steel nuts as well as left-hand threaded.

Cylindrical Steel Nuts

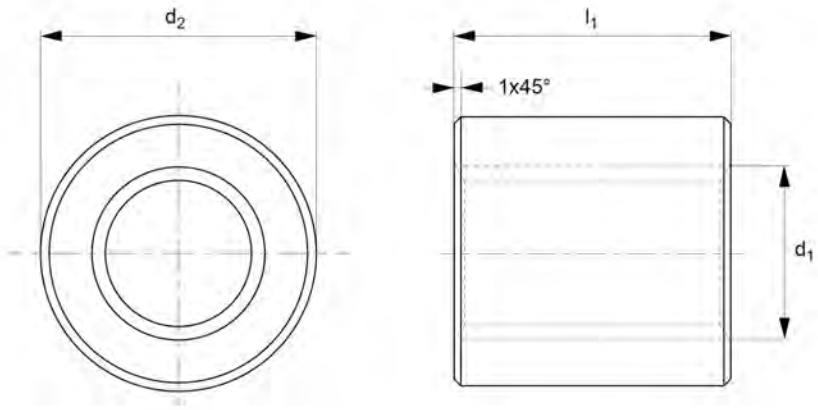



Part Number	Thread Size	d1 tol. 7H	d2 tol. h10	l1 +0.0|-0.1	Thread Direc-tion	Contact Sur-face	Lead
20147365	TR10 x 2	10.0	22.0	15.0	Left Hand	150.0	2.0
20147358	TR10 x 2	10.0	22.0	15.0	Right Hand	150.0	2.0
20149543	TR10 x 4	10.0	22.0	15.0	Right Hand	150.0	4.0
20147389	TR12 x 3	12.0	26.0	18.0	Left Hand	210.0	3.0
20147372	TR12 x 3	12.0	26.0	18.0	Right Hand	210.0	3.0
20149529	TR12 x 6	12.0	26.0	18.0	Right Hand	210.0	6.0
20147402	TR14 x 3	14.0	30.0	21.0	Left Hand	210.0	3.0
20147396	TR14 x 3	14.0	30.0	21.0	Right Hand	285.0	3.0
20149420	TR14 x 6	14.0	30.0	21.0	Right Hand	285.0	6.0
20147426	TR16 x 4	16.0	36.0	24.0	Left Hand	365.0	4.0
20147419	TR16 x 4	16.0	36.0	24.0	Right Hand	365.0	4.0
20149031	TR16 x 8	16.0	36.0	24.0	Right Hand	365.0	8.0
20147440	TR18 x 4	18.0	40.0	27.0	Left Hand	470.0	4.0
20147433	TR18 x 4	18.0	40.0	27.0	Right Hand	470.0	4.0
20149437	TR18 x 8	18.0	40.0	27.0	Right Hand	470.0	8.0
20147464	TR20 x 4	20.0	45.0	30.0	Left Hand	590.0	4.0
20147457	TR20 x 4	20.0	45.0	30.0	Right Hand	590.0	4.0
20149444	TR20 x 8	20.0	45.0	30.0	Right Hand	590.0	8.0
20147488	TR22 x 5	22.0	45.0	33.0	Left Hand	700.0	5.0
20147471	TR22 x 5	22.0	45.0	33.0	Right Hand	700.0	5.0

Cylindrical Steel Nuts

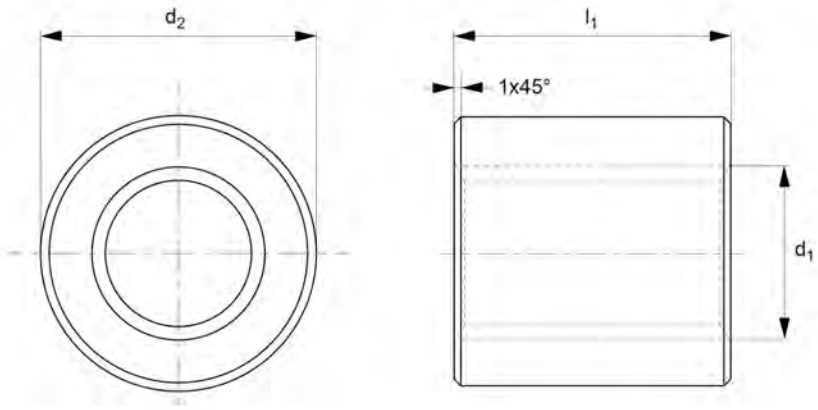



Part Number	Thread Size	d1 tol. 7H	d2 tol. h10	l1 +0.0|-0.1	Thread Direc-tion	Contact Sur-face	Lead
20147501	TR24 x 5	24.0	50.0	36.0	Left Hand	845.0	5.0
20147495	TR24 x 5	24.0	50.0	36.0	Right Hand	845.0	5.0
20149451	TR24 x 10	24.0	50.0	36.0	Right Hand	845.0	10.0
20147525	TR26 x 5	26.0	50.0	39.0	Left Hand	1005.0	5.0
20147518	TR26 x 5	26.0	50.0	39.0	Right Hand	1005.0	5.0
20147549	TR28 x 5	28.0	60.0	42.0	Left Hand	1175.0	5.0
20147532	TR28 x 5	28.0	60.0	42.0	Right Hand	1175.0	5.0
20149734	TR28 x 10	28.0	60.0	42.0	Right Hand	1175.0	10.0
20147563	TR30 x 6	30.0	60.0	45.0	Left Hand	1335.0	6.0
20147556	TR30 x 6	30.0	60.0	45.0	Right Hand	1335.0	6.0
20149536	TR30 x 12	30.0	60.0	45.0	Right Hand	1335.0	12.0
20147587	TR32 x 6	32.0	60.0	48.0	Left Hand	1430.0	6.0
20147570	TR32 x 6	32.0	60.0	48.0	Right Hand	1430.0	6.0
20147600	TR36 x 6	36.0	75.0	54.0	Left Hand	1950.0	6.0
20147594	TR36 x 6	36.0	75.0	54.0	Right Hand	1950.0	6.0
20149468	TR36 x 12	36.0	75.0	54.0	Right Hand	1950.0	12.0
20147624	TR40 x 7	40.0	80.0	60.0	Left Hand	2400.0	7.0
20147617	TR40 x 7	40.0	80.0	60.0	Right Hand	2400.0	7.0
20149475	TR40 x 14	40.0	80.0	60.0	Right Hand	2400.0	14.0
20147648	TR44 x 7	44.0	80.0	66.0	Left Hand	2940.0	7.0
20147631	TR44 x 7	44.0	80.0	66.0	Right Hand	2940.0	7.0

Cylindrical Steel Nuts

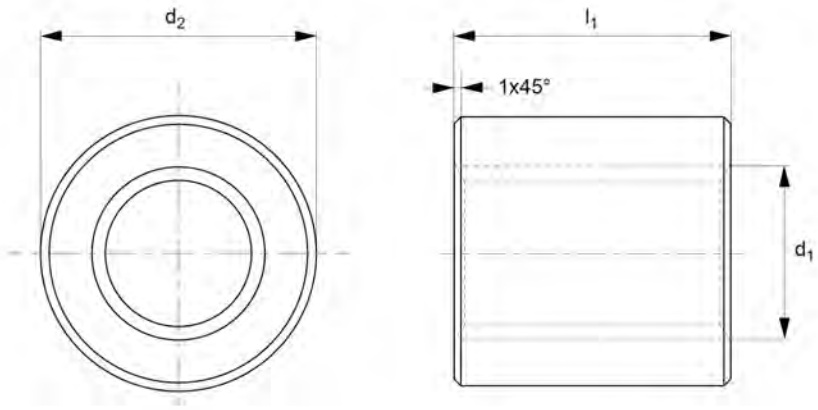



Part Number	Thread Size	d1 tol. 7H	d2 tol. h10	l1 +0.0|-0.1	Thread Direc-tion	Contact Sur-face	Lead
20147662	TR50 x 8	50.0	90.0	75.0	Left Hand	3790.0	8.0
20147655	TR50 x 8	50.0	90.0	75.0	Right Hand	3790.0	8.0
20147686	TR60 x 9	60.0	100.0	90.0	Left Hand	5490.0	9.0
20147679	TR60 x 9	60.0	100.0	90.0	Right Hand	5490.0	9.0
20147709	TR70 x 10	70.0	110.0	100.0	Left Hand	7140.0	10.0
20147693	TR70 x 10	70.0	110.0	100.0	Right Hand	7140.0	10.0
20147723	TR80 x 10	80.0	120.0	110.0	Left Hand	8900.0	10.0
20147716	TR80 x 10	80.0	120.0	110.0	Right Hand	8900.0	10.0

Hexagon Steel Nuts

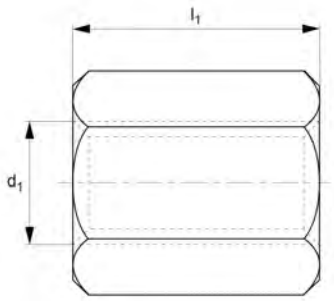

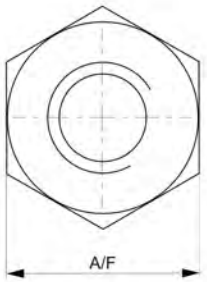

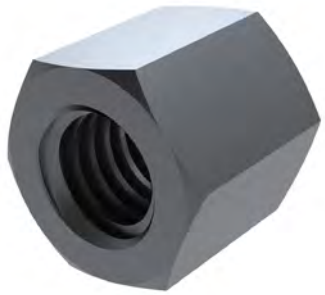

Features

- Used in a variety of industrial applications, including in automotive, aerospace, and medical equipment.
- Hexagon steel nuts give a solid grip while preventing loosening due to vibration or motion.
- It is used in applications that need high strength and durability but require lubrication to prevent the nut seizing with the screw.

Specifications

Material: Steel

Hexagon steel nuts give a solid grip while preventing loosening due to vibration or motion. They are simple to tighten and relax with a normal wrench or pliers. Hexagon steel nuts give a solid grip while preventing loosening due to vibration or motion. They are simple to tighten and relax with a normal wrench or pliers. They are used with steel or stainless steel lead screws for low rotational speeds, manual control, clamping or locking actions, and dead weight reception.

Due to its material, it is used in applications that need high strength and durability but require lubrication to prevent the nut seizing with the screw.

These are widely utilised in a variety of industrial applications, including in automotive, aerospace, and medical equipment. Available as standard right-hand thread hexagon steel nuts as well as left-hand threaded.
Please note: Steel to steel contact surfaces are inappropriate for motorised motion.

Hexagon Steel Nuts

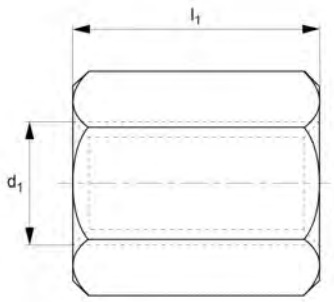

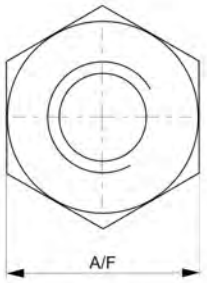

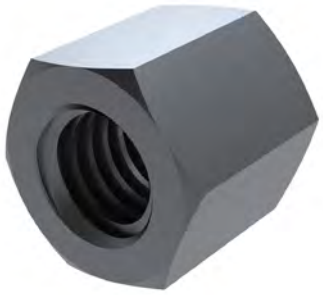

Part Number	Thread Size	l1 +0.0|-0.2	d1 tol. 7H	A/F tol. h11	Thread Direc-tion	No. of starts	Lead
20148225	TR10 x 2	15.0	10.0	17.0	Left Hand	1.0	2.0
20148218	TR10 x 2	15.0	10.0	17.0	Right Hand	1.0	2.0
20148249	TR12 x 3	18.0	12.0	19.0	Left Hand	1.0	3.0
20148232	TR12 x 3	18.0	12.0	19.0	Right Hand	1.0	3.0
20148256	TR12 x 6	18.0	12.0	19.0	Right Hand	2.0	6.0
20148270	TR14 x 3	21.0	14.0	22.0	Left Hand	1.0	3.0
20148263	TR14 x 3	21.0	14.0	22.0	Right Hand	1.0	3.0
20148287	TR14 x 6	21.0	14.0	22.0	Right Hand	2.0	6.0
20148300	TR16 x 4	24.0	16.0	24.0	Left Hand	1.0	4.0
20148294	TR16 x 4	24.0	16.0	24.0	Right Hand	1.0	4.0
20148317	TR16 x 8	24.0	16.0	24.0	Right Hand	2.0	8.0
20148331	TR18 x 4	27.0	18.0	27.0	Left Hand	1.0	4.0
20148324	TR18 x 4	27.0	18.0	27.0	Right Hand	1.0	4.0
20148348	TR18 x 8	27.0	18.0	27.0	Right Hand	2.0	8.0
20148362	TR20 x 4	30.0	20.0	30.0	Left Hand	1.0	4.0
20148355	TR20 x 4	30.0	20.0	30.0	Right Hand	1.0	4.0
20148379	TR20 x 8	30.0	20.0	30.0	Right Hand	2.0	8.0
20148393	TR22 x 5	33.0	22.0	30.0	Left Hand	1.0	5.0
20148386	TR22 x 5	33.0	22.0	30.0	Right Hand	1.0	5.0
20149697	TR22 x 10	33.0	22.0	30.0	Right Hand	2.0	5.0
20148423	TR24 x 5	36.0	24.0	36.0	Left Hand	1.0	5.0
20148416	TR24 x 5	36.0	24.0	36.0	Right Hand	1.0	5.0
20148409	TR24 x 10	36.0	24.0	36.0	Right Hand	2.0	10.0
20148447	TR26 x 5	39.0	26.0	36.0	Left Hand	1.0	5.0

Hexagon Steel Nuts

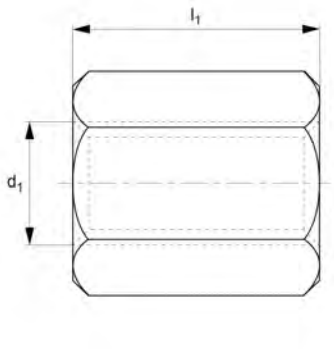

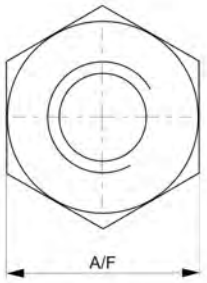

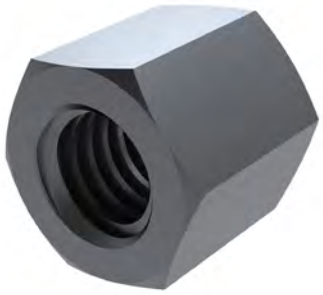

Part Number	Thread Size	l1 +0.0|-0.2	d1 tol. 7H	A/F tol. h11	Thread Direc-tion	No. of starts	Lead
20148430	TR26 x 5	39.0	26.0	36.0	Right Hand	1.0	5.0
20149703	TR26 x 10	39.0	26.0	36.0	Right Hand	2.0	10.0
20148461	TR28 x 5	42.0	28.0	41.0	Left Hand	1.0	5.0
20148454	TR28 x 5	42.0	28.0	41.0	Right Hand	1.0	5.0
20148492	TR30 x 6	45.0	30.0	46.0	Left Hand	1.0	6.0
20148485	TR30 x 6	45.0	30.0	46.0	Right Hand	1.0	6.0
20148478	TR30 x 12	54.0	30.0	55.0	Right Hand	2.0	12.0
20148515	TR32 x 6	48.0	32.0	50.0	Left Hand	1.0	6.0
20148508	TR32 x 6	48.0	32.0	50.0	Right Hand	1.0	6.0
20148546	TR36 x 6	54.0	36.0	55.0	Left Hand	1.0	6.0
20148539	TR36 x 6	54.0	36.0	55.0	Right Hand	1.0	6.0
20148522	TR36 x 12	54.0	36.0	55.0	Right Hand	2.0	12.0
20148577	TR40 x 7	60.0	40.0	60.0	Left Hand	1.0	7.0
20148560	TR40 x 7	60.0	40.0	60.0	Right Hand	1.0	7.0
20148553	TR40 x 14	60.0	40.0	60.0	Right Hand	2.0	14.0
20148591	TR44 x 7	66.0	44.0	65.0	Left Hand	1.0	7.0
20148584	TR44 x 7	66.0	44.0	65.0	Right Hand	1.0	7.0
20148614	TR50 x 8	75.0	50.0	75.0	Left Hand	1.0	8.0
20148607	TR50 x 8	75.0	50.0	75.0	Right Hand	1.0	8.0
20148638	TR60 x 9	90.0	60.0	90.0	Left Hand	1.0	9.0
20148621	TR60 x 9	90.0	60.0	90.0	Right Hand	1.0	9.0

Square Nuts

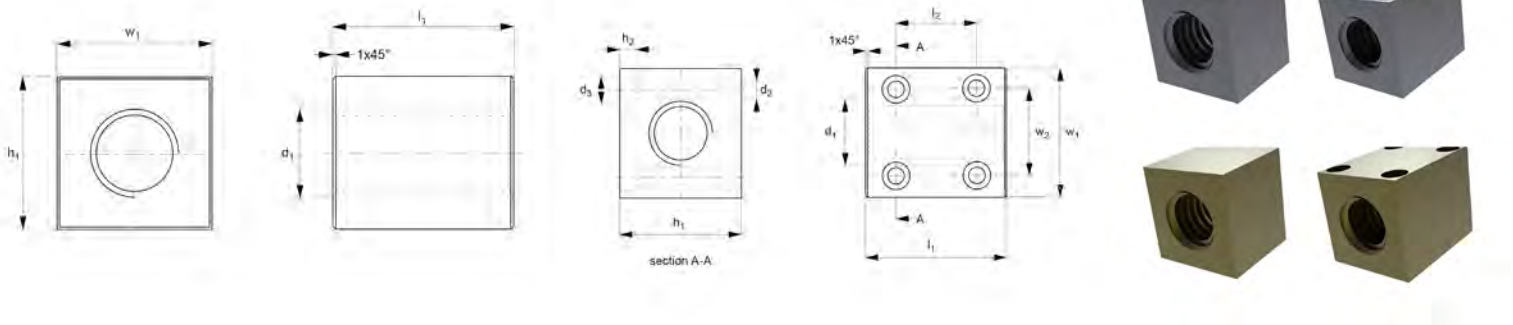

Features

In this range you will find: Square Bronze Nuts with fixing holes, Square Brass Nuts, Square Steel Nuts and Square Steel Nuts with Fixing holes.

- Utilised in a variety of industrial applications, including in automotive, aerospace, and medical equipment.
- Available as standard right-hand thread square nuts as well as left-hand threaded.

Specifications

Material: Steel, Bronze, Brass

In this range used with lead screws, you will find a wide range of Square Nuts depending on your needs: Square Bronze Nuts with fixing holes, Square Brass Nuts, Square Steel Nuts and Square Steel Nuts with Fixing holes.

- Square Bronze Nuts with through holes are used when a secure and robust connection is needed. It provides stability and strength, making it suited for medium-duty applications. It has through holes suitable for cap head screws.
- Square Brass Nut is used in applications where fairly light loads are required. It is sturdy and resistant to corrosion, moisture, and other factors.
- Square Steel Nuts are utilised in applications that need slow rotational speeds, manual control, clamping or locking actions.
- Square Steel Nuts with Holes are used for applications with low rotational speeds, manual control, and locking functions. It has through holes suitable for cap head screws.

These are widely utilised in a variety of industrial applications, including in automotive, aerospace, and medical equipment. Available as standard right-hand thread square nuts as well as left-hand threaded. Please note: Steel to steel contact surfaces are inappropriate for motorised motion.

Square Nuts

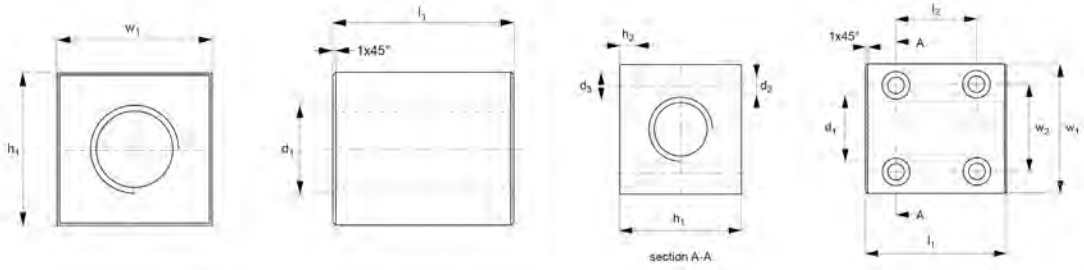



Part Number	Thread Size	d1 tol. 7H	l1 +0.0|-0.2	h1 & w1	Lead	Thread Direction	Material
20148652	TR10 x 2	10.0	15.0	17.0	2.0	Left Hand	Steel
20148645	TR10 x 2	10.0	15.0	17.0	2.0	Right Hand	Steel
20149123	TR12 x 3	12.0	25.0	25.0	3.0	Left Hand	Brass
20149192	TR12 x 3	12.0	25.0	25.0	3.0	Right Hand	Brass
20149260	TR12 x 3	12.0	30.0	25.0	3.0	Left Hand	Steel
20149345	TR12 x 3	12.0	30.0	25.0	3.0	Right Hand	Steel
20148676	TR12 x 3	12.0	18.0	25.0	3.0	Left Hand	Steel
20148669	TR12 x 3	12.0	18.0	25.0	3.0	Right Hand	Steel
20148683	TR12 x 6	12.0	18.0	25.0	6.0	Right Hand	Steel
20148706	TR14 x 3	14.0	20.0	25.0	3.0	Left Hand	Steel
20148690	TR14 x 3	14.0	20.0	25.0	3.0	Right Hand	Steel
20148713	TR14 x 6	14.0	20.0	25.0	6.0	Right Hand	Steel
20149130	TR16 x 4	16.0	35.0	30.0	4.0	Left Hand	Brass
20149208	TR16 x 4	16.0	35.0	30.0	4.0	Right Hand	Brass
20149048	TR16 x 4	16.0	40.0	35.0	4.0	Left Hand	Bronze
20149086	TR16 x 4	16.0	40.0	35.0	4.0	Right Hand	Bronze
20149277	TR16 x 4	16.0	40.0	35.0	4.0	Left Hand	Steel
20149352	TR16 x 4	16.0	40.0	35.0	4.0	Right Hand	Steel
20148737	TR16 x 4	16.0	24.0	28.0	4.0	Left Hand	Steel
20148720	TR16 x 4	16.0	24.0	28.0	4.0	Right Hand	Steel
20148744	TR16 x 8	16.0	24.0	28.0	8.0	Right Hand	Steel
20149147	TR18 x 4	18.0	45.0	35.0	4.0	Left Hand	Brass
20149215	TR18 x 4	18.0	45.0	35.0	4.0	Right Hand	Brass

Square Nuts

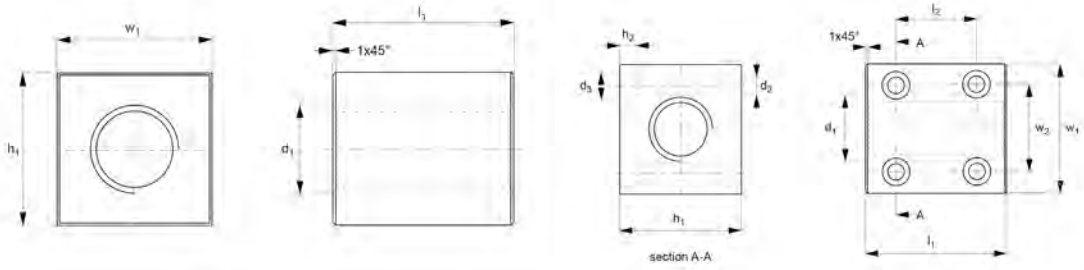



Part Number	Thread Size	d1 tol. 7H	l1 +0.0|-0.2	h1 & w1	Lead	Thread Direction	Material
20149284	TR18 x 4	18.0	45.0	35.0	4.0	Left Hand	Steel
20149369	TR18 x 4	18.0	45.0	35.0	4.0	Right Hand	Steel
20148768	TR18 x 4	18.0	28.0	30.0	4.0	Left Hand	Steel
20148751	TR18 x 4	18.0	28.0	30.0	4.0	Right Hand	Steel
20148775	TR18 x 8	18.0	28.0	30.0	8.0	Right Hand	Steel
20149154	TR20 x 4	20.0	50.0	40.0	4.0	Left Hand	Brass
20149222	TR20 x 4	20.0	50.0	40.0	4.0	Right Hand	Brass
20149055	TR20 x 4	20.0	50.0	40.0	4.0	Left Hand	Bronze
20149093	TR20 x 4	20.0	50.0	40.0	4.0	Right Hand	Bronze
20149291	TR20 x 4	20.0	50.0	40.0	4.0	Left Hand	Steel
20149376	TR20 x 4	20.0	50.0	40.0	4.0	Right Hand	Steel
20148799	TR20 x 4	20.0	30.0	35.0	4.0	Left Hand	Steel
20148782	TR20 x 4	20.0	30.0	35.0	4.0	Right Hand	Steel
20148805	TR20 x 8	20.0	30.0	35.0	8.0	Right Hand	Steel
20148829	TR22 x 5	22.0	33.0	35.0	5.0	Left Hand	Steel
20148812	TR22 x 5	22.0	33.0	35.0	5.0	Right Hand	Steel
20148850	TR24 x 5	24.0	36.0	40.0	5.0	Left Hand	Steel
20148843	TR24 x 5	24.0	36.0	40.0	5.0	Right Hand	Steel
20148836	TR24 x 10	24.0	36.0	40.0	10.0	Right Hand	Steel
20148874	TR26 x 5	26.0	39.0	40.0	5.0	Left Hand	Steel
20148867	TR26 x 5	26.0	39.0	40.0	5.0	Right Hand	Steel
20148898	TR28 x 5	28.0	42.0	45.0	5.0	Left Hand	Steel
20148881	TR28 x 5	28.0	42.0	45.0	5.0	Right Hand	Steel

Square Nuts

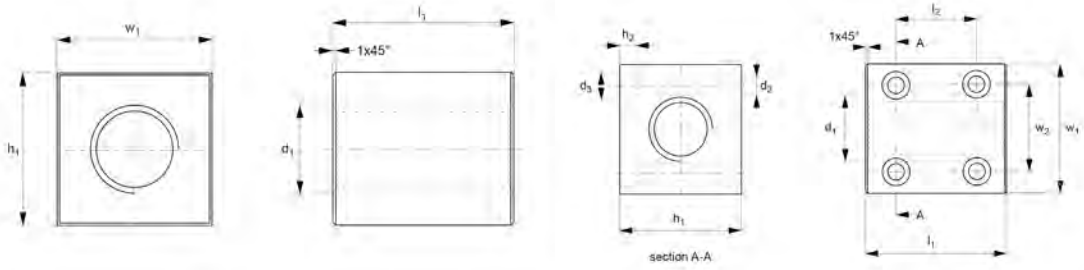



Part Number	Thread Size	d1 tol. 7H	l1 +0.0|-0.2	h1 & w1	Lead	Thread Direction	Material
20148904	TR30 x 2	30.0	45.0	45.0	2.0	Right Hand	Steel
20149161	TR30 x 6	30.0	60.0	50.0	6.0	Left Hand	Brass
20149239	TR30 x 6	30.0	60.0	50.0	6.0	Right Hand	Brass
20149062	TR30 x 6	30.0	60.0	50.0	6.0	Left Hand	Bronze
20149109	TR30 x 6	30.0	60.0	50.0	6.0	Right Hand	Bronze
20149307	TR30 x 6	30.0	60.0	50.0	6.0	Left Hand	Steel
20149383	TR30 x 6	30.0	60.0	50.0	6.0	Right Hand	Steel
20148928	TR30 x 6	30.0	45.0	45.0	6.0	Left Hand	Steel
20148911	TR30 x 6	30.0	45.0	45.0	6.0	Right Hand	Steel
20148942	TR32 x 6	32.0	48.0	55.0	6.0	Left Hand	Steel
20148935	TR32 x 6	32.0	48.0	55.0	6.0	Right Hand	Steel
20148959	TR36 x 2	36.0	54.0	60.0	2.0	Right Hand	Steel
20149178	TR36 x 6	36.0	70.0	60.0	6.0	Left Hand	Brass
20149246	TR36 x 6	36.0	70.0	60.0	6.0	Right Hand	Brass
20148973	TR36 x 6	36.0	54.0	60.0	6.0	Left Hand	Steel
20148966	TR36 x 6	36.0	54.0	60.0	6.0	Right Hand	Steel
20148980	TR40 x 4	40.0	60.0	60.0	4.0	Right Hand	Steel
20149185	TR40 x 7	40.0	70.0	60.0	7.0	Left Hand	Brass
20149253	TR40 x 7	40.0	70.0	60.0	7.0	Right Hand	Brass
20149079	TR40 x 7	40.0	75.0	60.0	7.0	Left Hand	Bronze
20149116	TR40 x 7	40.0	75.0	60.0	7.0	Right Hand	Bronze
20149314	TR40 x 7	40.0	70.0	60.0	7.0	Left Hand	Steel
20149390	TR40 x 7	40.0	70.0	60.0	7.0	Right Hand	Steel

Square Nuts

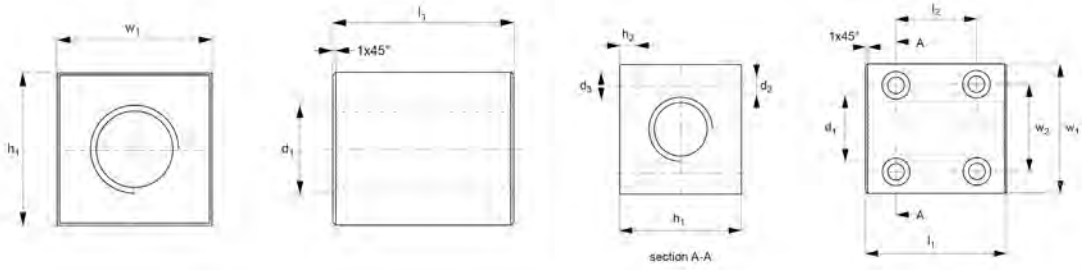



Part Number	Thread Size	d1 tol. 7H	l1 +0.0|-0.2	h1 & w1	Lead	Thread Direc-tion	Material
20149000	TR40 x 7	40.0	60.0	60.0	7.0	Left Hand	Steel
20148997	TR40 x 7	40.0	60.0	60.0	7.0	Right Hand	Steel
20149024	TR44 x 7	44.0	66.0	65.0	7.0	Left Hand	Steel
20149017	TR44 x 7	44.0	66.0	65.0	7.0	Right Hand	Steel
20149321	TR50 x 8	50.0	90.0	70.0	8.0	Left Hand	Steel
20149406	TR50 x 8	50.0	90.0	70.0	8.0	Right Hand	Steel
20149338	TR60 x 9	60.0	100.0	80.0	9.0	Left Hand	Steel
20149413	TR60 x 9	60.0	100.0	80.0	9.0	Right Hand	Steel

Ball Screws

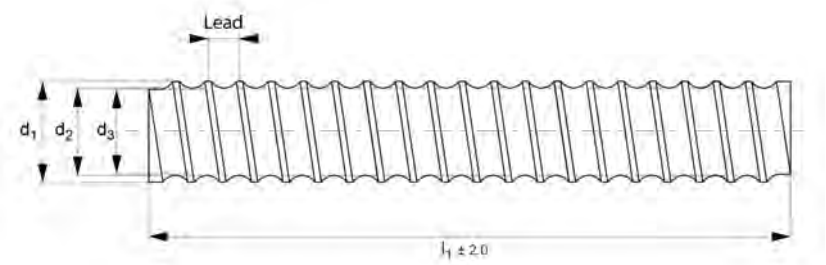



Features

Ball Screws are precision components used in linear motion systems to convert rotary motion into linear motion efficiently and accurately.

- Ball Screws are precision components used in linear motion systems.
- Converts rotary motion into linear motion.

Specifications

Material: Steel

Ball Screws are precision components used in linear motion systems to convert rotary motion into linear motion efficiently and accurately. They consist of a threaded shaft (or nut) and a set of precision ground ball bearings. The ball bearings roll between the shaft and nut, reducing friction and wear common in sliding motion systems.

These are commonly used in various industrial applications, especially in automotive, aerospace and medical equipment. Based on the diameter, a large selection of ball screws is provided.

Please note: Do not remove the ball nut from the sleeve before assembly, as the balls will come loose, and the nut will become unusable.

Ball Screws

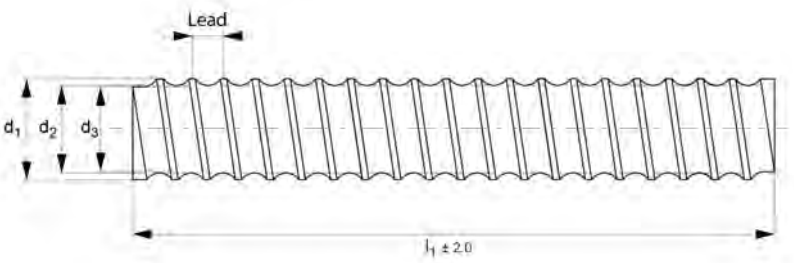



Part Number	Screw dia. x lead	l1	Lead	d1	d2	d3	Mass moment of inertia kg·m²
20176174	16x5	500.0	5.0	17.08	16.0	13.90	4,45x10-5
20176259	16x10	500.0	10.0	17.08	16.0	12.90	4,36x10-5
20176334	16x16	500.0	16.0	17.08	16.0	12.90	4,36x10-5
20176419	16x20	500.0	20.0	17.08	16.0	12.90	4,36x10-5
20176495	16x32	500.0	32.0	17.08	16.0	12.90	4,36x10-5
20176570	20x5	500.0	5.0	21.08	20.0	17.9	1,12x10-4
20176648	20x10	500.0	10.0	21.08	10.0	17.9	1,18x10-4
20176723	20x20	500.0	20.0	20.76	20.0	17.6	1,00x10-4
20176808	20x40	500.0	40.0	20.76	20.0	17.6	1,00x10-4
20176884	25x5	500.0	5.0	26.08	25.0	22.9	2,62x10-4
20177027	25x10	500.0	10.0	27.15	25.0	20.8	2,94x10-4
20177164	25x25	500.0	25.0	26.09	25.0	22.9	2,60x10-4
20177300	25x50	500.0	50.0	26.09	25.0	22.9	2,60x10-4
20177447	32x5	500.0	5.0	33.08	32.0	29.90	7,25x10-4
20177584	32x10	500.0	10.0	34.15	32.0	27.80	7,69x10-4
20177720	32x20	500.0	20.0	33.35	32.0	29.38	7,76x10-4
20177867	32x32	500.0	32.0	32.35	32.0	28.40	6,89x10-4
20178000	32x64	500.0	64.0	32.35	32.0	28.40	6,89x10-4
20178147	40x5	500.0	5.0	41.08	40.0	37.9	1,81x10-3
20178284	40x10	500.0	10.0	42.15	40.0	35.8	1,66x10-3
20178420	40x20	500.0	20.0	42.15	40.0	35.8	1,66x10-3
20178567	40x40	500.0	40.0	39.52	40.0	33.2	1,43x10-3
20178703	40x80	500.0	80.0	39.52	40.0	33.2	1,43x10-3
20178840	50x5	500.0	5.0	52.15	50.0	45.80	4,19x10-3

Ball Screws

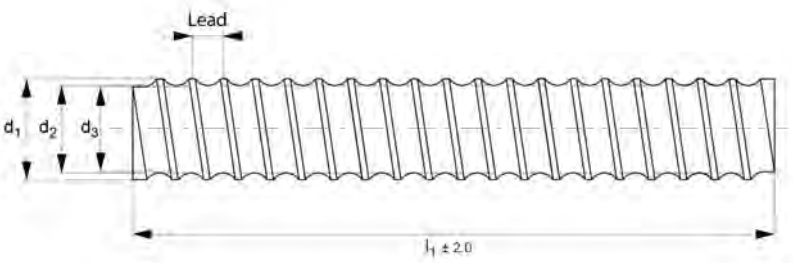



Part Number	Screw dia. x lead	l1	Lead	d1	d2	d3	Mass moment of inertia kg·m²
20178987	50x10	500.0	10.0	52.15	50.0	45.80	4,19x10-3
20179120	50x20	500.0	20.0	53.58	50.0	44.05	4,45x10-3
20179267	50x50	500.0	50.0	53.58	50.0	44.05	4,45x10-3
20179403	63x10	500.0	10.0	65.15	63.0	58.8	1,09x10-2
20179564	80x10	500.0	10.0	82.15	80.0	75.8	2,89x10-2
20176181	16x5	600.0	5.0	17.08	16.0	13.90	4,45x10-5
20176266	16x10	600.0	10.0	17.08	16.0	12.90	4,36x10-5
20176341	16x16	600.0	16.0	17.08	16.0	12.90	4,36x10-5
20176426	16x20	600.0	20.0	17.08	16.0	12.90	4,36x10-5
20176501	16x32	600.0	32.0	17.08	16.0	12.90	4,36x10-5
20176587	20x5	600.0	5.0	21.08	20.0	17.9	1,12x10-4
20176655	20x10	600.0	10.0	21.08	10.0	17.9	1,18x10-4
20176730	20x20	600.0	20.0	20.76	20.0	17.6	1,00x10-4
20176815	20x40	600.0	40.0	20.76	20.0	17.6	1,00x10-4
20176891	25x5	600.0	5.0	26.08	25.0	22.9	2,62x10-4
20177034	25x10	600.0	10.0	27.15	25.0	20.8	2,94x10-4
20177171	25x25	600.0	25.0	26.09	25.0	22.9	2,60x10-4
20177317	25x50	600.0	50.0	26.09	25.0	22.9	2,60x10-4
20177454	32x5	600.0	5.0	33.08	32.0	29.90	7,25x10-4
20177591	32x10	600.0	10.0	34.15	32.0	27.80	7,69x10-4
20177737	32x20	600.0	20.0	33.35	32.0	29.38	7,76x10-4
20177874	32x32	600.0	32.0	32.35	32.0	28.40	6,89x10-4
20178017	32x64	600.0	64.0	32.35	32.0	28.40	6,89x10-4
20178154	40x5	600.0	5.0	41.08	40.0	37.9	1,81x10-3

Ball Screws

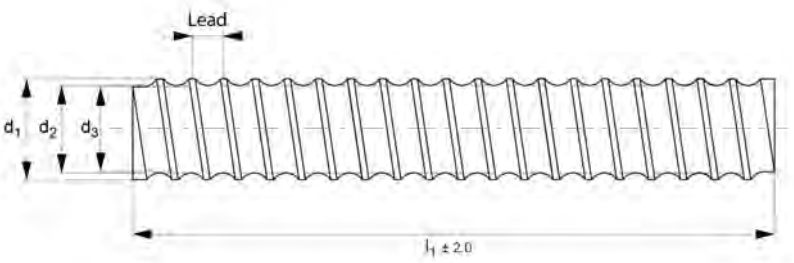



Part Number	Screw dia. x lead	l1	Lead	d1	d2	d3	Mass moment of inertia kg·m²
20178291	40x10	600.0	10.0	42.15	40.0	35.8	1,66x10-3
20178437	40x20	600.0	20.0	42.15	40.0	35.8	1,66x10-3
20178574	40x40	600.0	40.0	39.52	40.0	33.2	1,43x10-3
20178710	40x80	600.0	80.0	39.52	40.0	33.2	1,43x10-3
20178857	50x5	600.0	5.0	52.15	50.0	45.80	4,19x10-3
20178994	50x10	600.0	10.0	52.15	50.0	45.80	4,19x10-3
20179137	50x20	600.0	20.0	53.58	50.0	44.05	4,45x10-3
20179274	50x50	600.0	50.0	53.58	50.0	44.05	4,45x10-3
20179410	63x10	600.0	10.0	65.15	63.0	58.8	1,09x10-2
20179571	80x10	600.0	10.0	82.15	80.0	75.8	2,89x10-2
20179427	63x10	700.0	10.0	65.15	63.0	58.8	1,09x10-2
20179588	80x10	700.0	10.0	82.15	80.0	75.8	2,89x10-2
20176198	16x5	800.0	5.0	17.08	16.0	13.90	4,45x10-5
20176273	16x10	800.0	10.0	17.08	16.0	12.90	4,36x10-5
20176358	16x16	800.0	16.0	17.08	16.0	12.90	4,36x10-5
20176433	16x20	800.0	20.0	17.08	16.0	12.90	4,36x10-5
20176518	16x32	800.0	32.0	17.08	16.0	12.90	4,36x10-5
20176594	20x5	800.0	5.0	21.08	20.0	17.9	1,12x10-4
20176662	20x10	800.0	10.0	21.08	10.0	17.9	1,18x10-4
20176747	20x20	800.0	20.0	20.76	20.0	17.6	1,00x10-4
20176822	20x40	800.0	40.0	20.76	20.0	17.6	1,00x10-4
20176907	25x5	800.0	5.0	26.08	25.0	22.9	2,62x10-4
20177041	25x10	800.0	10.0	27.15	25.0	20.8	2,94x10-4
20177188	25x25	800.0	25.0	26.09	25.0	22.9	2,60x10-4

Ball Screws

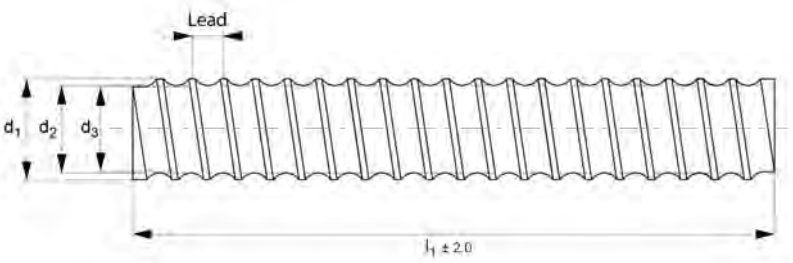



Part Number	Screw dia. x lead	l1	Lead	d1	d2	d3	Mass moment of inertia kg·m²
20177324	25x50	800.0	50.0	26.09	25.0	22.9	2,60x10-4
20177461	32x5	800.0	5.0	33.08	32.0	29.90	7,25x10-4
20177607	32x10	800.0	10.0	34.15	32.0	27.80	7,69x10-4
20177744	32x20	800.0	20.0	33.35	32.0	29.38	7,76x10-4
20177881	32x32	800.0	32.0	32.35	32.0	28.40	6,89x10-4
20178024	32x64	800.0	64.0	32.35	32.0	28.40	6,89x10-4
20178161	40x5	800.0	5.0	41.08	40.0	37.9	1,81x10-3
20178307	40x10	800.0	10.0	42.15	40.0	35.8	1,66x10-3
20178444	40x20	800.0	20.0	42.15	40.0	35.8	1,66x10-3
20178581	40x40	800.0	40.0	39.52	40.0	33.2	1,43x10-3
20178727	40x80	800.0	80.0	39.52	40.0	33.2	1,43x10-3
20178864	50x5	800.0	5.0	52.15	50.0	45.80	4,19x10-3
20179007	50x10	800.0	10.0	52.15	50.0	45.80	4,19x10-3
20179144	50x20	800.0	20.0	53.58	50.0	44.05	4,45x10-3
20179281	50x50	800.0	50.0	53.58	50.0	44.05	4,45x10-3
20179434	63x10	800.0	10.0	65.15	63.0	58.8	1,09x10-2
20179595	80x10	800.0	10.0	82.15	80.0	75.8	2,89x10-2
20176204	16x5	1000.0	5.0	17.08	16.0	13.90	4,45x10-5
20176280	16x10	1000.0	10.0	17.08	16.0	12.90	4,36x10-5
20176365	16x16	1000.0	16.0	17.08	16.0	12.90	4,36x10-5
20176440	16x20	1000.0	20.0	17.08	16.0	12.90	4,36x10-5
20176525	16x32	1000.0	32.0	17.08	16.0	12.90	4,36x10-5
20176600	20x5	1000.0	5.0	21.08	20.0	17.9	1,12x10-4
20176679	20x10	1000.0	10.0	21.08	10.0	17.9	1,18x10-4

Ball Screws

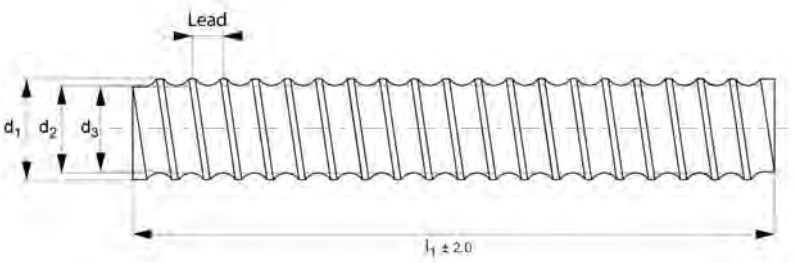



Part Number	Screw dia. x lead	l1	Lead	d1	d2	d3	Mass moment of inertia kg·m²
20176754	20x20	1000.0	20.0	20.76	20.0	17.6	1,00x10-4
20176839	20x40	1000.0	40.0	20.76	20.0	17.6	1,00x10-4
20176914	25x5	1000.0	5.0	26.08	25.0	22.9	2,62x10-4
20177058	25x10	1000.0	10.0	27.15	25.0	20.8	2,94x10-4
20177195	25x25	1000.0	25.0	26.09	25.0	22.9	2,60x10-4
20177331	25x50	1000.0	50.0	26.09	25.0	22.9	2,60x10-4
20177478	32x5	1000.0	5.0	33.08	32.0	29.90	7,25x10-4
20177614	32x10	1000.0	10.0	34.15	32.0	27.80	7,69x10-4
20177751	32x20	1000.0	20.0	33.35	32.0	29.38	7,76x10-4
20177898	32x32	1000.0	32.0	32.35	32.0	28.40	6,89x10-4
20178031	32x64	1000.0	64.0	32.35	32.0	28.40	6,89x10-4
20178178	40x5	1000.0	5.0	41.08	40.0	37.9	1,81x10-3
20178314	40x10	1000.0	10.0	42.15	40.0	35.8	1,66x10-3
20178451	40x20	1000.0	20.0	42.15	40.0	35.8	1,66x10-3
20178598	40x40	1000.0	40.0	39.52	40.0	33.2	1,43x10-3
20178734	40x80	1000.0	80.0	39.52	40.0	33.2	1,43x10-3
20178871	50x5	1000.0	5.0	52.15	50.0	45.80	4,19x10-3
20179014	50x10	1000.0	10.0	52.15	50.0	45.80	4,19x10-3
20179151	50x20	1000.0	20.0	53.58	50.0	44.05	4,45x10-3
20179298	50x50	1000.0	50.0	53.58	50.0	44.05	4,45x10-3
20179441	63x10	1000.0	10.0	65.15	63.0	58.8	1,09x10-2
20179601	80x10	1000.0	10.0	82.15	80.0	75.8	2,89x10-2
20176211	16x5	1500.0	5.0	17.08	16.0	13.90	4,45x10-5
20176297	16x10	1500.0	10.0	17.08	16.0	12.90	4,36x10-5

Ball Screws

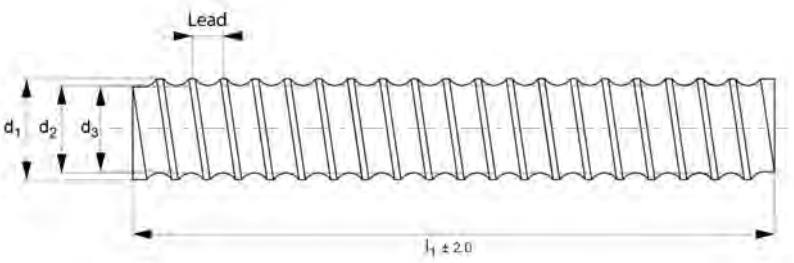



Part Number	Screw dia. x lead	l1	Lead	d1	d2	d3	Mass moment of inertia kg·m²
20176372	16x16	1500.0	16.0	17.08	16.0	12.90	4,36x10-5
20176457	16x20	1500.0	20.0	17.08	16.0	12.90	4,36x10-5
20176532	16x32	1500.0	32.0	17.08	16.0	12.90	4,36x10-5
20176167	20x5	1500.0	5.0	21.08	20.0	17.9	1,12x10-4
20176686	20x10	1500.0	10.0	21.08	10.0	17.9	1,18x10-4
20176761	20x20	1500.0	20.0	20.76	20.0	17.6	1,00x10-4
20176846	20x40	1500.0	40.0	20.76	20.0	17.6	1,00x10-4
20176921	25x5	1500.0	5.0	26.08	25.0	22.9	2,62x10-4
20177065	25x10	1500.0	10.0	27.15	25.0	20.8	2,94x10-4
20177201	25x25	1500.0	25.0	26.09	25.0	22.9	2,60x10-4
20177348	25x50	1500.0	50.0	26.09	25.0	22.9	2,60x10-4
20177485	32x5	1500.0	5.0	33.08	32.0	29.90	7,25x10-4
20177621	32x10	1500.0	10.0	34.15	32.0	27.80	7,69x10-4
20177768	32x20	1500.0	20.0	33.35	32.0	29.38	7,76x10-4
20177904	32x32	1500.0	32.0	32.35	32.0	28.40	6,89x10-4
20178048	32x64	1500.0	64.0	32.35	32.0	28.40	6,89x10-4
20178185	40x5	1500.0	5.0	41.08	40.0	37.9	1,81x10-3
20178321	40x10	1500.0	10.0	42.15	40.0	35.8	1,66x10-3
20178468	40x20	1500.0	20.0	42.15	40.0	35.8	1,66x10-3
20178604	40x40	1500.0	40.0	39.52	40.0	33.2	1,43x10-3
20178741	40x80	1500.0	80.0	39.52	40.0	33.2	1,43x10-3
20178888	50x5	1500.0	5.0	52.15	50.0	45.80	4,19x10-3
20179021	50x10	1500.0	10.0	52.15	50.0	45.80	4,19x10-3
20179168	50x20	1500.0	20.0	53.58	50.0	44.05	4,45x10-3

Ball Screws

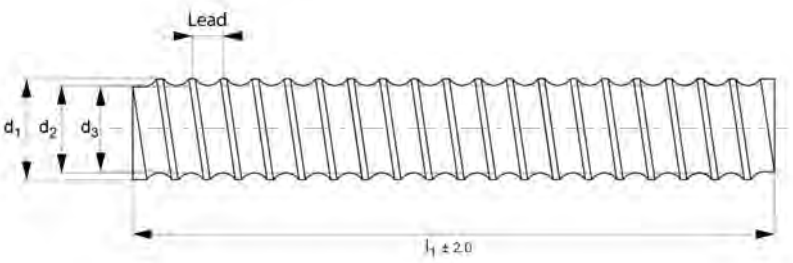



Part Number	Screw dia. x lead	l1	Lead	d1	d2	d3	Mass moment of inertia kg·m²
20179304	50x50	1500.0	50.0	53.58	50.0	44.05	4,45x10-3
20179458	63x10	1500.0	10.0	65.15	63.0	58.8	1,09x10-2
20179618	80x10	1500.0	10.0	82.15	80.0	75.8	2,89x10-2
20176228	16x5	2000.0	5.0	17.08	16.0	13.90	4,45x10-5
20176303	16x10	2000.0	10.0	17.08	16.0	12.90	4,36x10-5
20176389	16x16	2000.0	16.0	17.08	16.0	12.90	4,36x10-5
20176464	16x20	2000.0	20.0	17.08	16.0	12.90	4,36x10-5
20176549	16x32	2000.0	32.0	17.08	16.0	12.90	4,36x10-5
20176617	20x5	2000.0	5.0	21.08	20.0	17.9	1,12x10-4
20176693	20x10	2000.0	10.0	21.08	10.0	17.9	1,18x10-4
20176778	20x20	2000.0	20.0	20.76	20.0	17.6	1,00x10-4
20176853	20x40	2000.0	40.0	20.76	20.0	17.6	1,00x10-4
20176938	25x5	2000.0	5.0	26.08	25.0	22.9	2,62x10-4
20177072	25x10	2000.0	10.0	27.15	25.0	20.8	2,94x10-4
20177218	25x25	2000.0	25.0	26.09	25.0	22.9	2,60x10-4
20177355	25x50	2000.0	50.0	26.09	25.0	22.9	2,60x10-4
20177492	32x5	2000.0	5.0	33.08	32.0	29.90	7,25x10-4
20177638	32x10	2000.0	10.0	34.15	32.0	27.80	7,69x10-4
20177775	32x20	2000.0	20.0	33.35	32.0	29.38	7,76x10-4
20177911	32x32	2000.0	32.0	32.35	32.0	28.40	6,89x10-4
20178055	32x64	2000.0	64.0	32.35	32.0	28.40	6,89x10-4
20178192	40x5	2000.0	5.0	41.08	40.0	37.9	1,81x10-3
20178338	40x10	2000.0	10.0	42.15	40.0	35.8	1,66x10-3
20178475	40x20	2000.0	20.0	42.15	40.0	35.8	1,66x10-3

Ball Screws

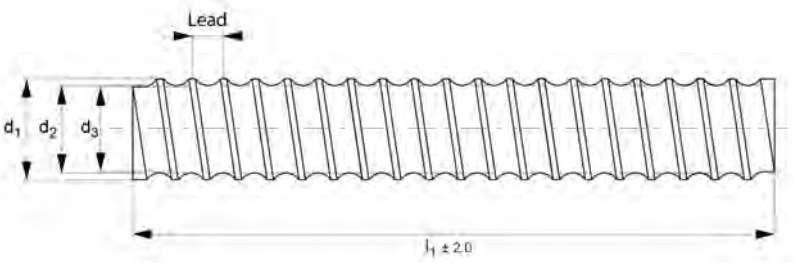



Part Number	Screw dia. x lead	l1	Lead	d1	d2	d3	Mass moment of inertia kg·m²
20178611	40x40	2000.0	40.0	39.52	40.0	33.2	1,43x10-3
20178758	40x80	2000.0	80.0	39.52	40.0	33.2	1,43x10-3
20178895	50x5	2000.0	5.0	52.15	50.0	45.80	4,19x10-3
20179038	50x10	2000.0	10.0	52.15	50.0	45.80	4,19x10-3
20179175	50x20	2000.0	20.0	53.58	50.0	44.05	4,45x10-3
20179311	50x50	2000.0	50.0	53.58	50.0	44.05	4,45x10-3
20179465	63x10	2000.0	10.0	65.15	63.0	58.8	1,09x10-2
20179625	80x10	2000.0	10.0	82.15	80.0	75.8	2,89x10-2
20176235	16x5	2500.0	5.0	17.08	16.0	13.90	4,45x10-5
20176310	16x10	2500.0	10.0	17.08	16.0	12.90	4,36x10-5
20176396	16x16	2500.0	16.0	17.08	16.0	12.90	4,36x10-5
20176471	16x20	2500.0	20.0	17.08	16.0	12.90	4,36x10-5
20176556	16x32	2500.0	32.0	17.08	16.0	12.90	4,36x10-5
20176624	20x5	2500.0	5.0	21.08	20.0	17.9	1,12x10-4
20176709	20x10	2500.0	10.0	21.08	10.0	17.9	1,18x10-4
20176785	20x20	2500.0	20.0	20.76	20.0	17.6	1,00x10-4
20176860	20x40	2500.0	40.0	20.76	20.0	17.6	1,00x10-4
20176945	25x5	2500.0	5.0	26.08	25.0	22.9	2,62x10-4
20177089	25x10	2500.0	10.0	27.15	25.0	20.8	2,94x10-4
20177225	25x25	2500.0	25.0	26.09	25.0	22.9	2,60x10-4
20177362	25x50	2500.0	50.0	26.09	25.0	22.9	2,60x10-4
20177508	32x5	2500.0	5.0	33.08	32.0	29.90	7,25x10-4
20177645	32x10	2500.0	10.0	34.15	32.0	27.80	7,69x10-4
20177782	32x20	2500.0	20.0	33.35	32.0	29.38	7,76x10-4

Ball Screws

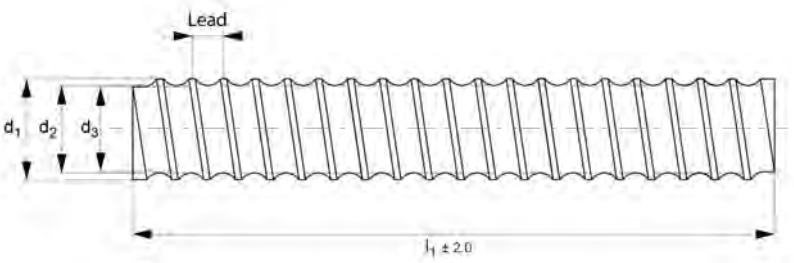



Part Number	Screw dia. x lead	l1	Lead	d1	d2	d3	Mass moment of inertia kg·m²
20177928	32x32	2500.0	32.0	32.35	32.0	28.40	6,89x10-4
20178062	32x64	2500.0	64.0	32.35	32.0	28.40	6,89x10-4
20178208	40x5	2500.0	5.0	41.08	40.0	37.9	1,81x10-3
20178345	40x10	2500.0	10.0	42.15	40.0	35.8	1,66x10-3
20178482	40x20	2500.0	20.0	42.15	40.0	35.8	1,66x10-3
20178628	40x40	2500.0	40.0	39.52	40.0	33.2	1,43x10-3
20178765	40x80	2500.0	80.0	39.52	40.0	33.2	1,43x10-3
20178901	50x5	2500.0	5.0	52.15	50.0	45.80	4,19x10-3
20179045	50x10	2500.0	10.0	52.15	50.0	45.80	4,19x10-3
20179182	50x20	2500.0	20.0	53.58	50.0	44.05	4,45x10-3
20179328	50x50	2500.0	50.0	53.58	50.0	44.05	4,45x10-3
20179472	63x10	2500.0	10.0	65.15	63.0	58.8	1,09x10-2
20179632	80x10	2500.0	10.0	82.15	80.0	75.8	2,89x10-2
20176242	16x5	3000.0	5.0	17.08	16.0	13.90	4,45x10-5
20176327	16x10	3000.0	10.0	17.08	16.0	12.90	4,36x10-5
20176402	16x16	3000.0	16.0	17.08	16.0	12.90	4,36x10-5
20176488	16x20	3000.0	20.0	17.08	16.0	12.90	4,36x10-5
20176563	16x32	3000.0	32.0	17.08	16.0	12.90	4,36x10-5
20176631	20x5	3000.0	5.0	21.08	20.0	17.9	1,12x10-4
20176716	20x10	3000.0	10.0	21.08	10.0	17.9	1,18x10-4
20176792	20x20	3000.0	20.0	20.76	20.0	17.6	1,00x10-4
20176877	20x40	3000.0	40.0	20.76	20.0	17.6	1,00x10-4
20176952	25x5	3000.0	5.0	26.08	25.0	22.9	2,62x10-4
20177096	25x10	3000.0	10.0	27.15	25.0	20.8	2,94x10-4

Ball Screws

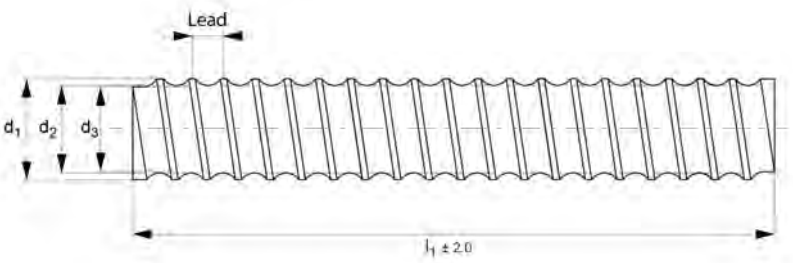



Part Number	Screw dia. x lead	l1	Lead	d1	d2	d3	Mass moment of inertia kg·m²
20177232	25x25	3000.0	25.0	26.09	25.0	22.9	2,60x10-4
20177379	25x50	3000.0	50.0	26.09	25.0	22.9	2,60x10-4
20177515	32x5	3000.0	5.0	33.08	32.0	29.90	7,25x10-4
20177652	32x10	3000.0	10.0	34.15	32.0	27.80	7,69x10-4
20177799	32x20	3000.0	20.0	33.35	32.0	29.38	7,76x10-4
20177935	32x32	3000.0	32.0	32.35	32.0	28.40	6,89x10-4
20178079	32x64	3000.0	64.0	32.35	32.0	28.40	6,89x10-4
20178215	40x5	3000.0	5.0	41.08	40.0	37.9	1,81x10-3
20178352	40x10	3000.0	10.0	42.15	40.0	35.8	1,66x10-3
20178499	40x20	3000.0	20.0	42.15	40.0	35.8	1,66x10-3
20178635	40x40	3000.0	40.0	39.52	40.0	33.2	1,43x10-3
20178772	40x80	3000.0	80.0	39.52	40.0	33.2	1,43x10-3
20178918	50x5	3000.0	5.0	52.15	50.0	45.80	4,19x10-3
20179052	50x10	3000.0	10.0	52.15	50.0	45.80	4,19x10-3
20179199	50x20	3000.0	20.0	53.58	50.0	44.05	4,45x10-3
20179335	50x50	3000.0	50.0	53.58	50.0	44.05	4,45x10-3
20179489	63x10	3000.0	10.0	65.15	63.0	58.8	1,09x10-2
20179649	80x10	3000.0	10.0	82.15	80.0	75.8	2,89x10-2
20176969	25x5	3500.0	5.0	26.08	25.0	22.9	2,62x10-4
20177102	25x10	3500.0	10.0	26.08	25.0	22.9	2,62x10-4
20177249	25x25	3500.0	25.0	26.08	25.0	22.9	2,62x10-4
20177386	25x50	3500.0	50.0	26.08	25.0	22.9	2,62x10-4
20177522	32x5	3500.0	5.0	33.08	32.0	29.90	7,25x10-4
20177669	32x10	3500.0	10.0	33.08	32.0	29.90	7,25x10-4

Ball Screws

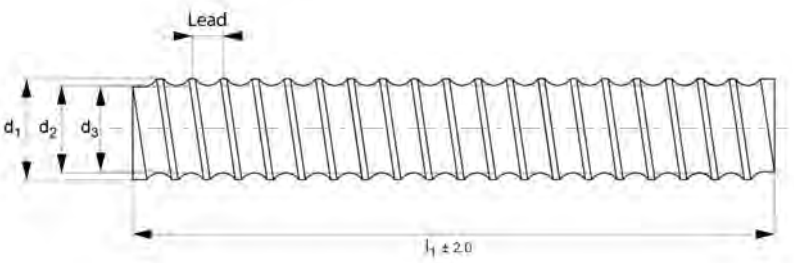



Part Number	Screw dia. x lead	l1	Lead	d1	d2	d3	Mass moment of inertia kg·m²
20177805	32x20	3500.0	20.0	33.08	32.0	29.90	7,25x10-4
20177942	32x32	3500.0	32.0	32.35	32.0	28.40	6,89x10-4
20178086	32x64	3500.0	64.0	32.35	32.0	28.40	6,89x10-4
20178222	40x5	3500.0	5.0	41.08	40.0	37.9	1,81x10-3
20178369	40x10	3500.0	10.0	42.15	40.0	37.9	1,81x10-3
20178505	40x20	3500.0	20.0	41.08	40.0	37.9	1,81x10-3
20178642	40x40	3500.0	40.0	41.08	40.0	37.9	1,81x10-3
20178789	40x80	3500.0	80.0	41.08	40.0	37.9	1,81x10-3
20178925	50x5	3500.0	5.0	52.15	50.0	45.80	4,19x10-3
20179069	50x10	3500.0	10.0	52.15	50.0	45.80	4,19x10-3
20179205	50x20	3500.0	20.0	53.58	50.0	44.05	4,45x10-3
20179342	50x50	3500.0	50.0	53.58	50.0	44.05	4,45x10-3
20179496	63x10	3500.0	10.0	65.15	63.0	58.8	1,09x10-2
20179656	80x10	3500.0	10.0	82.15	80.0	75.8	2,89x10-2
20176976	25x5	4000.0	5.0	26.08	25.0	22.9	2,62x10-4
20177119	25x10	4000.0	10.0	26.08	25.0	22.9	2,62x10-4
20177256	25x25	4000.0	25.0	26.08	25.0	22.9	2,62x10-4
20177393	25x50	4000.0	50.0	26.08	25.0	22.9	2,62x10-4
20177539	32x5	4000.0	5.0	33.08	32.0	29.90	7,25x10-4
20177676	32x10	4000.0	10.0	33.08	32.0	29.90	7,25x10-4
20177812	32x20	4000.0	20.0	33.08	32.0	29.90	7,25x10-4
20177959	32x32	4000.0	32.0	32.35	32.0	28.40	6,89x10-4
20178093	32x64	4000.0	64.0	32.35	32.0	28.40	6,89x10-4
20178239	40x5	4000.0	5.0	41.08	40.0	37.9	1,81x10-3

Ball Screws

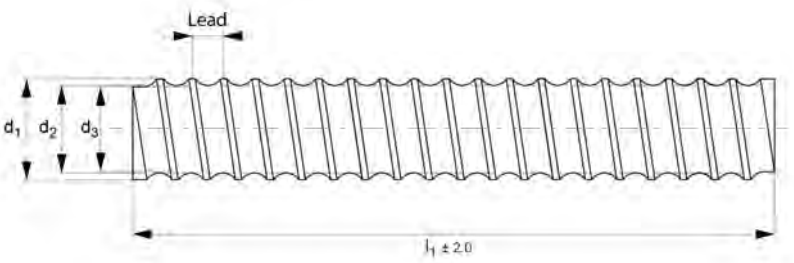



Part Number	Screw dia. x lead	l1	Lead	d1	d2	d3	Mass moment of inertia kg·m²
20178376	40x10	4000.0	10.0	42.15	40.0	37.9	1,81x10-3
20178512	40x20	4000.0	20.0	41.08	40.0	37.9	1,81x10-3
20178659	40x40	4000.0	40.0	41.08	40.0	37.9	1,81x10-3
20178796	40x80	4000.0	80.0	41.08	40.0	37.9	1,81x10-3
20178932	50x5	4000.0	5.0	52.15	50.0	45.80	4,19x10-3
20179076	50x10	4000.0	10.0	52.15	50.0	45.80	4,19x10-3
20179212	50x20	4000.0	20.0	53.58	50.0	44.05	4,45x10-3
20179359	50x50	4000.0	50.0	53.58	50.0	44.05	4,45x10-3
20179502	63x10	4000.0	10.0	65.15	63.0	58.8	1,09x10-2
20179663	80x10	4000.0	10.0	82.15	80.0	75.8	2,89x10-2
20176983	25x5	4500.0	5.0	26.08	25.0	22.9	2,62x10-4
20177126	25x10	4500.0	10.0	26.08	25.0	22.9	2,62x10-4
20177263	25x25	4500.0	25.0	26.08	25.0	22.9	2,62x10-4
20177409	25x50	4500.0	50.0	26.08	25.0	22.9	2,62x10-4
20177546	32x5	4500.0	5.0	33.08	32.0	29.90	7,25x10-4
20177683	32x10	4500.0	10.0	33.08	32.0	29.90	7,25x10-4
20177829	32x20	4500.0	20.0	33.08	32.0	29.90	7,25x10-4
20177966	32x32	4500.0	32.0	32.35	32.0	28.40	6,89x10-4
20178109	32x64	4500.0	64.0	32.35	32.0	28.40	6,89x10-4
20178246	40x5	4500.0	5.0	41.08	40.0	37.9	1,81x10-3
20178383	40x10	4500.0	10.0	42.15	40.0	37.9	1,81x10-3
20178529	40x20	4500.0	20.0	41.08	40.0	37.9	1,81x10-3
20178666	40x40	4500.0	40.0	41.08	40.0	37.9	1,81x10-3
20178802	40x80	4500.0	80.0	41.08	40.0	37.9	1,81x10-3

Ball Screws

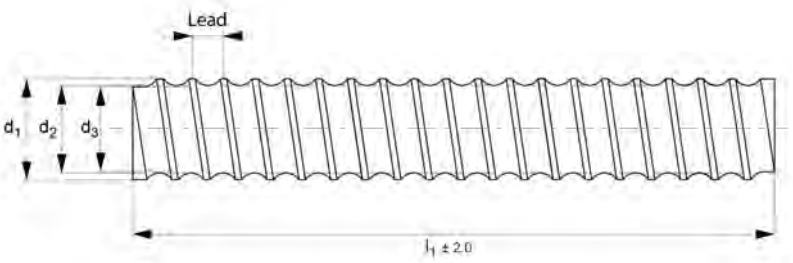



Part Number	Screw dia. x lead	l1	Lead	d1	d2	d3	Mass moment of inertia kg·m²
20178949	50x5	4500.0	5.0	52.15	50.0	45.80	4,19x10-3
20179083	50x10	4500.0	10.0	52.15	50.0	45.80	4,19x10-3
20179229	50x20	4500.0	20.0	53.58	50.0	44.05	4,45x10-3
20179366	50x50	4500.0	50.0	53.58	50.0	44.05	4,45x10-3
20179519	63x10	4500.0	10.0	65.15	63.0	58.8	1,09x10-2
20179670	80x10	4500.0	10.0	82.15	80.0	75.8	2,89x10-2
20176990	25x5	5000.0	5.0	26.08	25.0	22.9	2,62x10-4
20177133	25x10	5000.0	10.0	26.08	25.0	22.9	2,62x10-4
20177270	25x25	5000.0	25.0	26.08	25.0	22.9	2,62x10-4
20177416	25x50	5000.0	50.0	26.08	25.0	22.9	2,62x10-4
20177553	32x5	5000.0	5.0	33.08	32.0	29.90	7,25x10-4
20177690	32x10	5000.0	10.0	33.08	32.0	29.90	7,25x10-4
20177836	32x20	5000.0	20.0	33.08	32.0	29.90	7,25x10-4
20177973	32x32	5000.0	32.0	32.35	32.0	28.40	6,89x10-4
20178116	32x64	5000.0	64.0	32.35	32.0	28.40	6,89x10-4
20178253	40x5	5000.0	5.0	41.08	40.0	37.9	1,81x10-3
20178390	40x10	5000.0	10.0	42.15	40.0	37.9	1,81x10-3
20178536	40x20	5000.0	20.0	41.08	40.0	37.9	1,81x10-3
20178673	40x40	5000.0	40.0	41.08	40.0	37.9	1,81x10-3
20178819	40x80	5000.0	80.0	41.08	40.0	37.9	1,81x10-3
20178956	50x5	5000.0	5.0	52.15	50.0	45.80	4,19x10-3
20179090	50x10	5000.0	10.0	52.15	50.0	45.80	4,19x10-3
20179236	50x20	5000.0	20.0	53.58	50.0	44.05	4,45x10-3
20179373	50x50	5000.0	50.0	53.58	50.0	44.05	4,45x10-3

Ball Screws

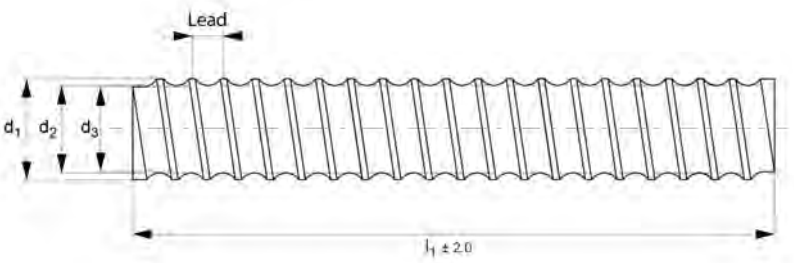



Part Number	Screw dia. x lead	l1	Lead	d1	d2	d3	Mass moment of inertia kg·m²
20179526	63x10	5000.0	10.0	65.15	63.0	58.8	1,09x10-2
20179687	80x10	5000.0	10.0	82.15	80.0	75.8	2,89x10-2
20177003	25x5	5500.0	5.0	26.08	25.0	22.9	2,62x10-4
20177140	25x10	5500.0	10.0	26.08	25.0	22.9	2,62x10-4
20177287	25x25	5500.0	25.0	26.08	25.0	22.9	2,62x10-4
20177423	25x50	5500.0	50.0	26.08	25.0	22.9	2,62x10-4
20177560	32x5	5500.0	5.0	33.08	32.0	29.90	7,25x10-4
20177706	32x10	5500.0	10.0	33.08	32.0	29.90	7,25x10-4
20177843	32x20	5500.0	20.0	33.08	32.0	29.90	7,25x10-4
20177980	32x32	5500.0	32.0	32.35	32.0	28.40	6,89x10-4
20178123	32x64	5500.0	64.0	32.35	32.0	28.40	6,89x10-4
20178260	40x5	5500.0	5.0	41.08	40.0	37.9	1,81x10-3
20178406	40x10	5500.0	10.0	42.15	40.0	37.9	1,81x10-3
20178543	40x20	5500.0	20.0	41.08	40.0	37.9	1,81x10-3
20178680	40x40	5500.0	40.0	41.08	40.0	37.9	1,81x10-3
20178826	40x80	5500.0	80.0	41.08	40.0	37.9	1,81x10-3
20178963	50x5	5500.0	5.0	52.15	50.0	45.80	4,19x10-3
20179106	50x10	5500.0	10.0	52.15	50.0	45.80	4,19x10-3
20179243	50x20	5500.0	20.0	53.58	50.0	44.05	4,45x10-3
20179380	50x50	5500.0	50.0	53.58	50.0	44.05	4,45x10-3
20179533	63x10	5500.0	10.0	65.15	63.0	58.8	1,09x10-2
20179694	80x10	5500.0	10.0	82.15	80.0	75.8	2,89x10-2
20177010	25x5	6000.0	5.0	26.08	25.0	22.9	2,62x10-4
20177157	25x10	6000.0	10.0	26.08	25.0	22.9	2,62x10-4

Ball Screws

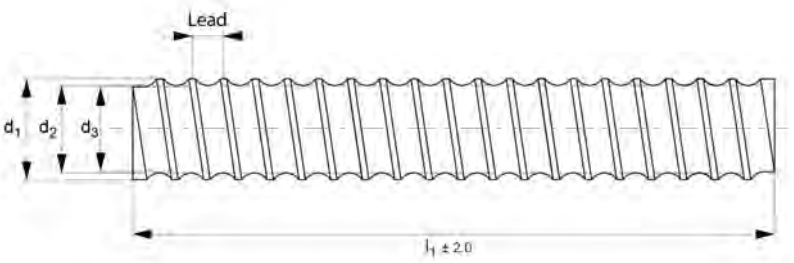



Part Number	Screw dia. x lead	l1	Lead	d1	d2	d3	Mass moment of inertia kg·m²
20177294	25x25	6000.0	25.0	26.08	25.0	22.9	2,62x10-4
20177430	25x50	6000.0	50.0	26.08	25.0	22.9	2,62x10-4
20177577	32x5	6000.0	5.0	33.08	32.0	29.90	7,25x10-4
20177713	32x10	6000.0	10.0	33.08	32.0	29.90	7,25x10-4
20177850	32x20	6000.0	20.0	33.08	32.0	29.90	7,25x10-4
20177997	32x32	6000.0	32.0	32.35	32.0	28.40	6,89x10-4
20178130	32x64	6000.0	64.0	32.35	32.0	28.40	6,89x10-4
20178277	40x5	6000.0	5.0	41.08	40.0	37.9	1,81x10-3
20178413	40x10	6000.0	10.0	42.15	40.0	37.9	1,81x10-3
20178550	40x20	6000.0	20.0	41.08	40.0	37.9	1,81x10-3
20178697	40x40	6000.0	40.0	41.08	40.0	37.9	1,81x10-3
20178833	40x80	6000.0	80.0	41.08	40.0	37.9	1,81x10-3
20178970	50x5	6000.0	5.0	52.15	50.0	45.80	4,19x10-3
20179113	50x10	6000.0	10.0	52.15	50.0	45.80	4,19x10-3
20179250	50x20	6000.0	20.0	53.58	50.0	44.05	4,45x10-3
20179397	50x50	6000.0	50.0	53.58	50.0	44.05	4,45x10-3
20179540	63x10	6000.0	10.0	65.15	63.0	58.8	1,09x10-2
20179700	80x10	6000.0	10.0	82.15	80.0	75.8	2,89x10-2
20179557	63x10	6500.0	10.0	65.15	63.0	58.8	1,09x10-2
20179717	80x10	6500.0	10.0	82.15	80.0	75.8	2,89x10-2

Flanged Ball Nuts

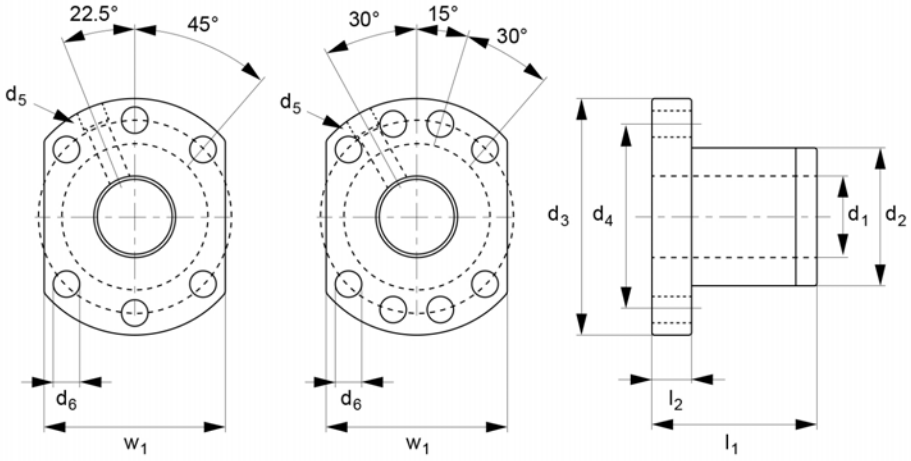

for d_1 ≤Ø32
type 1

for d_1 ≥Ø40
type 2



Features

- It is intended for manual or motorised applications at low rotational speeds under load.
- Extremely durable and have an element of self lubrication.
- Utilised in a variety of industrial applications, including in automotive, aerospace, and medical equipment.

Specifications

Material: Steel

Flanged Ball Nuts are an essential component of ball screw assemblies. They are precision mechanical components used in linear motion systems. These nuts, as the name implies, include a flange, which is a flat, projecting rim that extends from the nut and offers additional support and ease of installation.

It's used in conjunction with ball screws to convert rotary motion to linear motion. Ball bearings in the nut roll along the ball screw as it turns, giving smooth and precise linear motion. The flange features a tight tolerance, ensuring minimum backlash and high precision and accuracy.

These are widely utilised in a variety of industrial applications, including in automotive, aerospace, and medical equipment. Please keep in mind that removing the ball nut from the sleeve provided can cause the ball bearings to come loose, rendering the ball nut useless.

Flanged Ball Nuts

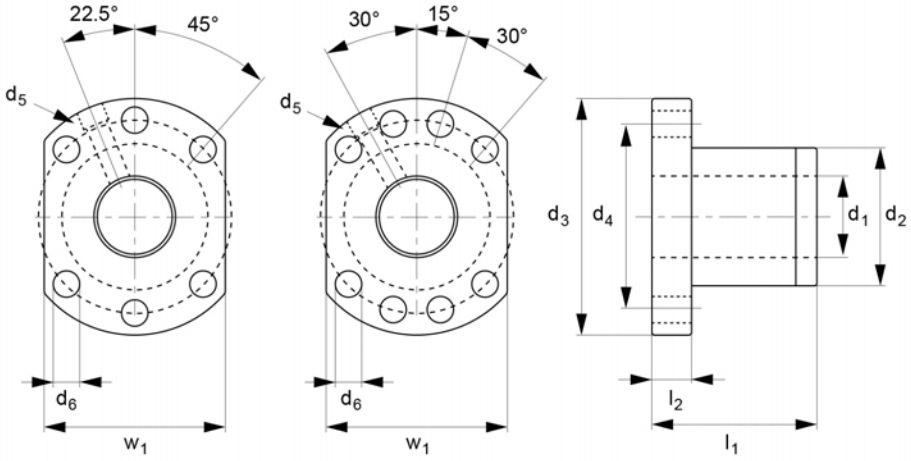

for d_1 ≤Ø32
type 1

for d_1 ≥Ø40
type 2

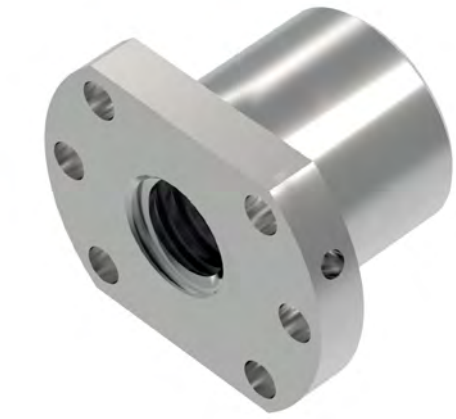

Part Number	Type	d1 for screw	d2 tol. G6	d3 ±0.15	d4 ±0.15	l1	l2
20176013	Type 1	16.0	28.0	48.0	38.0	45.0	10.0
20176020	Type 1	16.0	28.0	48.0	38.0	57.0	1.0
20176037	Type 1	20.0	36.0	58.0	47.0	51.0	10.0
20176044	Type 1	25.0	40.0	62.0	51.0	51.0	10.0
20176051	Type 1	25.0	40.0	62.0	51.0	80.0	12.0
20176068	Type 1	32.0	50.0	80.0	65.0	52.0	12.0
20176075	Type 1	32.0	50.0	80.0	65.0	85.0	12.0
20176082	Type 2	40.0	63.0	93.0	78.0	55.0	14.0
20176099	Type 2	40.0	63.0	93.0	78.0	88.0	14.0
20176105	Type 2	50.0	75.0	110.0	93.0	88.0	16.0
20176112	Type 2	63.0	90.0	125.0	108.0	93.0	18.0
20176129	Type 2	80.0	105.0	145.0	125.0	93.0	20.0

Hardened Steel Shafts

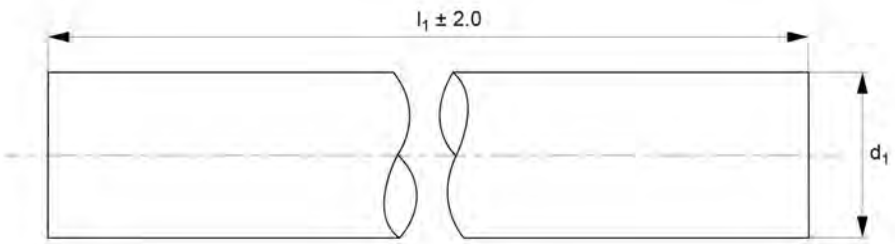



Features

- Combine exceptional size precision, straightness, and concentricity to reduce wear in high-speed applications.
- Suitable for applications such as industrial machinery, automotive systems, and medical devices.
- Shafts made from high-quality steel that undergoes a specialised hardening process.

Specifications

Material: Steel

These Hardened Steel Shafts are robust and reliable components used in various mechanical applications. They are used with all types of linear bushings. They combine exceptional size precision, straightness, and concentricity to reduce wear in high-speed applications.

The shafts are made from high-quality steel that undergoes a specialised hardening process, resulting in increased strength, longevity, and resistance to wear and corrosion. When combined with a linear ball bushing, it ensures smooth and precise rotational motion.

Their material makes them suitable for applications that require heavy-duty performance, such as industrial machinery, automotive systems, and medical devices.

Part Number	d1 tol. h6	l1	Depth of hardness min
20338121	5.0	100.0	0.4
20336943	5.0	150.0	0.4
20336950	5.0	200.0	0.4
20336967	5.0	250.0	0.4
20336974	5.0	300.0	0.4
20336981	5.0	350.0	0.4
20336998	5.0	400.0	0.4
20337001	5.0	450.0	0.4

Hardened Steel Shafts

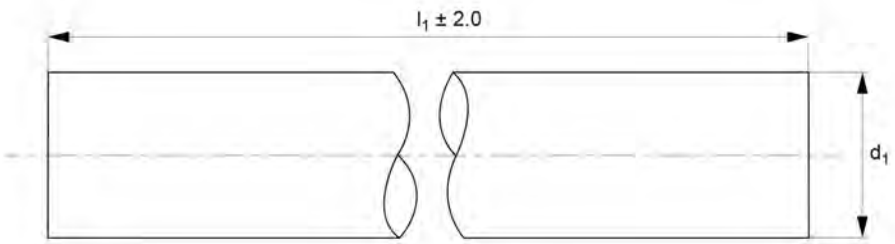



Part Number	d1 tol. h6	l1	Depth of hardness min
20337018	5.0	500.0	0.4
20337025	5.0	550.0	0.4
20337032	5.0	600.0	0.4
20337049	5.0	650.0	0.4
20337056	5.0	700.0	0.4
20337063	5.0	750.0	0.4
20337070	5.0	800.0	0.4
20337087	5.0	850.0	0.4
20337094	5.0	900.0	0.4
20337100	5.0	950.0	0.4
20337117	5.0	1000.0	0.4
20337124	5.0	1050.0	0.4
20337131	5.0	1100.0	0.4
20337148	5.0	1150.0	0.4
20337155	5.0	1200.0	0.4
20337162	5.0	1250.0	0.4
20337179	5.0	1300.0	0.4
20337186	5.0	1350.0	0.4
20337193	5.0	1400.0	0.4
20337209	5.0	1450.0	0.4
20337216	5.0	1500.0	0.4
20337223	5.0	1550.0	0.4
20337230	5.0	1600.0	0.4
20337247	5.0	1650.0	0.4
20337254	5.0	1700.0	0.4
20337261	5.0	1750.0	0.4
20337278	5.0	1800.0	0.4

Hardened Steel Shafts

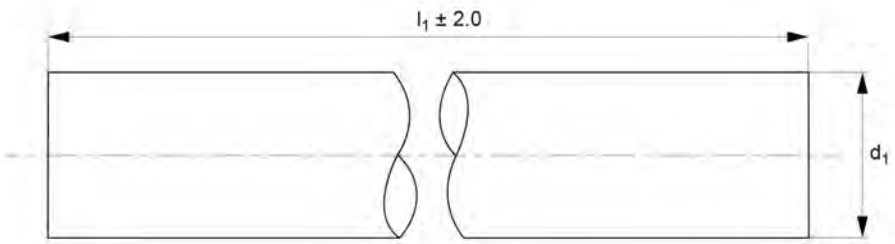



Part Number	d1 tol. h6	l1	Depth of hardness min
20337285	5.0	1850.0	0.4
20337292	5.0	1900.0	0.4
20337308	5.0	1950.0	0.4
20337315	5.0	2000.0	0.4
20337322	5.0	2050.0	0.4
20337339	5.0	2100.0	0.4
20337346	5.0	2150.0	0.4
20337353	5.0	2200.0	0.4
20337360	5.0	2250.0	0.4
20337377	5.0	2300.0	0.4
20337384	5.0	2350.0	0.4
20337391	5.0	2400.0	0.4
20337407	5.0	2450.0	0.4
20337414	5.0	2500.0	0.4
20337421	5.0	2550.0	0.4
20337438	5.0	2600.0	0.4
20337445	5.0	2650.0	0.4
20337452	5.0	2700.0	0.4
20337469	5.0	2750.0	0.4
20337476	5.0	2800.0	0.4
20337483	5.0	2850.0	0.4
20337490	5.0	2900.0	0.4
20337506	5.0	2950.0	0.4
20337513	5.0	3000.0	0.4
20337520	5.0	3050.0	0.4
20337537	5.0	3100.0	0.4

Hardened Steel Shafts

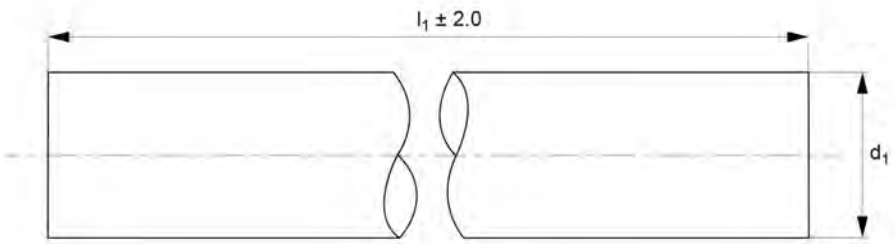



Part Number	d1 tol. h6	l1	Depth of hardness min
20337544	5.0	3150.0	0.4
20337551	5.0	3200.0	0.4
20337568	5.0	3250.0	0.4
20337575	5.0	3300.0	0.4
20337582	5.0	3350.0	0.4
20337599	5.0	3400.0	0.4
20337605	5.0	3450.0	0.4
20337612	5.0	3500.0	0.4
20337629	5.0	3550.0	0.4
20337636	5.0	3600.0	0.4
20337643	5.0	3650.0	0.4
20337650	5.0	3700.0	0.4
20337667	5.0	3750.0	0.4
20337674	5.0	3800.0	0.4
20337681	5.0	3850.0	0.4
20337698	5.0	3900.0	0.4
20337704	5.0	3950.0	0.4
20337711	5.0	4000.0	0.4
20337728	5.0	4050.0	0.4
20337735	5.0	4100.0	0.4
20337742	5.0	4150.0	0.4
20337759	5.0	4200.0	0.4
20337766	5.0	4250.0	0.4
20337773	5.0	4300.0	0.4
20337780	5.0	4350.0	0.4
20337797	5.0	4400.0	0.4
20337803	5.0	4450.0	0.4

Hardened Steel Shafts

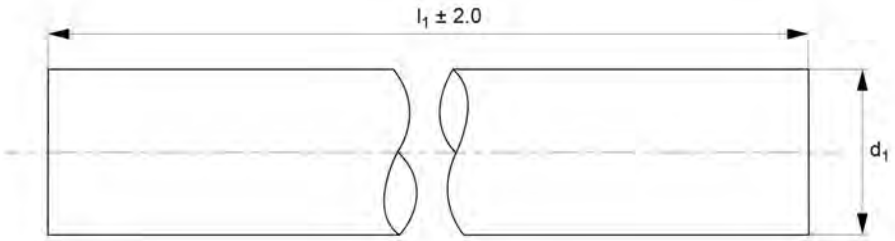



Part Number	d1 tol. h6	l1	Depth of hardness min
20337810	5.0	4500.0	0.4
20337827	5.0	4550.0	0.4
20337834	5.0	4600.0	0.4
20337841	5.0	4650.0	0.4
20337858	5.0	4700.0	0.4
20337865	5.0	4750.0	0.4
20337872	5.0	4800.0	0.4
20337889	5.0	4850.0	0.4
20337896	5.0	4900.0	0.4
20337902	5.0	4950.0	0.4
20337919	5.0	5000.0	0.4
20337926	5.0	5050.0	0.4
20337933	5.0	5100.0	0.4
20337940	5.0	5150.0	0.4
20337957	5.0	5200.0	0.4
20337964	5.0	5250.0	0.4
20337971	5.0	5300.0	0.4
20337988	5.0	5350.0	0.4
20337995	5.0	5400.0	0.4
20338008	5.0	5450.0	0.4
20338015	5.0	5500.0	0.4
20338022	5.0	5550.0	0.4
20338039	5.0	5600.0	0.4
20338046	5.0	5650.0	0.4
20338053	5.0	5700.0	0.4
20338060	5.0	5750.0	0.4
20338077	5.0	5800.0	0.4

Hardened Steel Shafts

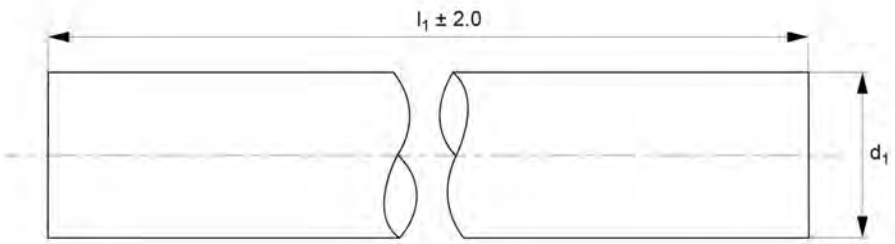



Part Number	d1 tol. h6	l1	Depth of hardness min
20338084	5.0	5850.0	0.4
20338091	5.0	5900.0	0.4
20338107	5.0	5950.0	0.4
20338114	5.0	6000.0	0.4
20272906	6.0	100.0	0.4
20272913	6.0	150.0	0.4
20272920	6.0	200.0	0.4
20272937	6.0	250.0	0.4
20272944	6.0	300.0	0.4
20272951	6.0	350.0	0.4
20272968	6.0	400.0	0.4
20272975	6.0	450.0	0.4
20272982	6.0	500.0	0.4
20272999	6.0	550.0	0.4
20273002	6.0	600.0	0.4
20273019	6.0	650.0	0.4
20273026	6.0	700.0	0.4
20273033	6.0	750.0	0.4
20273040	6.0	800.0	0.4
20273057	6.0	850.0	0.4
20273064	6.0	900.0	0.4
20273071	6.0	950.0	0.4
20273088	6.0	1000.0	0.4
20273095	6.0	1050.0	0.4
20273101	6.0	1100.0	0.4
20273118	6.0	1150.0	0.4
20273125	6.0	1200.0	0.4

Hardened Steel Shafts

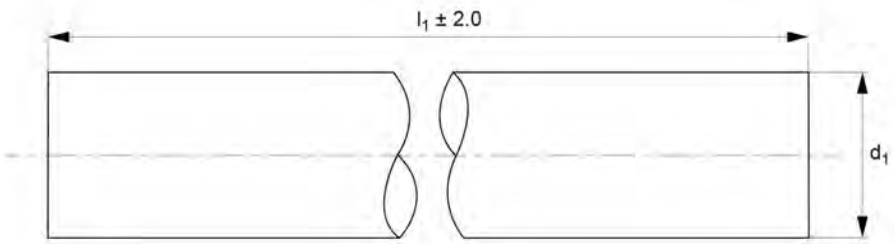



Part Number	d1 tol. h6	l1	Depth of hardness min
20273132	6.0	1250.0	0.4
20273149	6.0	1300.0	0.4
20273156	6.0	1350.0	0.4
20273163	6.0	1400.0	0.4
20273170	6.0	1450.0	0.4
20273187	6.0	1500.0	0.4
20273194	6.0	1550.0	0.4
20273200	6.0	1600.0	0.4
20273217	6.0	1650.0	0.4
20273224	6.0	1700.0	0.4
20273231	6.0	1750.0	0.4
20273248	6.0	1800.0	0.4
20273255	6.0	1850.0	0.4
20273262	6.0	1900.0	0.4
20273279	6.0	1950.0	0.4
20273286	6.0	2000.0	0.4
20273293	6.0	2050.0	0.4
20273309	6.0	2100.0	0.4
20273316	6.0	2150.0	0.4
20273323	6.0	2200.0	0.4
20273330	6.0	2250.0	0.4
20273347	6.0	2300.0	0.4
20273354	6.0	2350.0	0.4
20273361	6.0	2400.0	0.4
20273378	6.0	2450.0	0.4
20273385	6.0	2500.0	0.4
20273392	6.0	2550.0	0.4

Hardened Steel Shafts

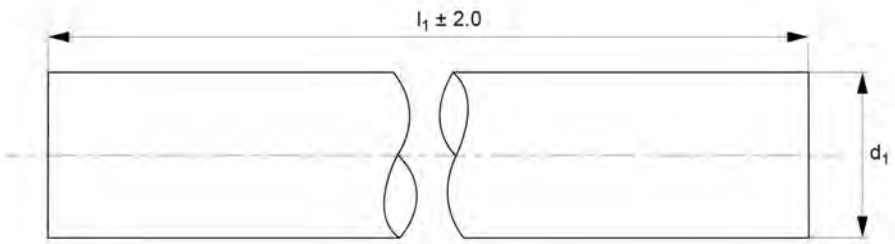



Part Number	d1 tol. h6	l1	Depth of hardness min
20273408	6.0	2600.0	0.4
20273415	6.0	2650.0	0.4
20273422	6.0	2700.0	0.4
20273439	6.0	2750.0	0.4
20273446	6.0	2800.0	0.4
20273453	6.0	2850.0	0.4
20273460	6.0	2900.0	0.4
20273477	6.0	2950.0	0.4
20273484	6.0	3000.0	0.4
20273491	6.0	3050.0	0.4
20273507	6.0	3100.0	0.4
20273514	6.0	3150.0	0.4
20273521	6.0	3200.0	0.4
20273538	6.0	3250.0	0.4
20273545	6.0	3300.0	0.4
20273552	6.0	3350.0	0.4
20273569	6.0	3400.0	0.4
20273576	6.0	3450.0	0.4
20273583	6.0	3500.0	0.4
20273590	6.0	3550.0	0.4
20273606	6.0	3600.0	0.4
20273613	6.0	3650.0	0.4
20273620	6.0	3700.0	0.4
20273637	6.0	3750.0	0.4
20273644	6.0	3800.0	0.4
20273651	6.0	3850.0	0.4
20273668	6.0	3900.0	0.4

Hardened Steel Shafts

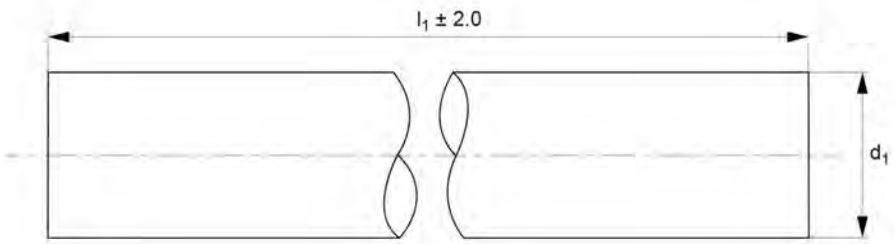



Part Number	d1 tol. h6	l1	Depth of hardness min
20273675	6.0	3950.0	0.4
20273682	6.0	4000.0	0.4
20273699	6.0	4050.0	0.4
20273705	6.0	4100.0	0.4
20273712	6.0	4150.0	0.4
20273729	6.0	4200.0	0.4
20273736	6.0	4250.0	0.4
20273743	6.0	4300.0	0.4
20273750	6.0	4350.0	0.4
20273767	6.0	4400.0	0.4
20273774	6.0	4450.0	0.4
20273781	6.0	4500.0	0.4
20273798	6.0	4550.0	0.4
20273804	6.0	4600.0	0.4
20273811	6.0	4650.0	0.4
20273828	6.0	4700.0	0.4
20273835	6.0	4750.0	0.4
20273842	6.0	4800.0	0.4
20273859	6.0	4850.0	0.4
20273866	6.0	4900.0	0.4
20273873	6.0	4950.0	0.4
20273880	6.0	5000.0	0.4
20273897	6.0	5050.0	0.4
20273903	6.0	5100.0	0.4
20273910	6.0	5150.0	0.4
20273927	6.0	5200.0	0.4
20273934	6.0	5250.0	0.4

Hardened Steel Shafts

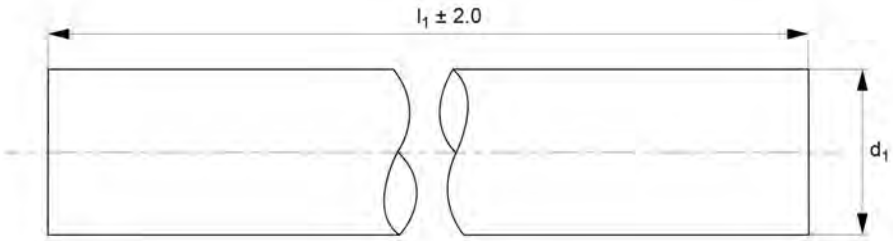



Part Number	d1 tol. h6	l1	Depth of hardness min
20273941	6.0	5300.0	0.4
20273958	6.0	5350.0	0.4
20273965	6.0	5400.0	0.4
20273972	6.0	5450.0	0.4
20273989	6.0	5500.0	0.4
20273996	6.0	5550.0	0.4
20274009	6.0	5600.0	0.4
20274016	6.0	5650.0	0.4
20274023	6.0	5700.0	0.4
20274030	6.0	5750.0	0.4
20274047	6.0	5800.0	0.4
20274054	6.0	5850.0	0.4
20274061	6.0	5900.0	0.4
20274078	6.0	5950.0	0.4
20274085	6.0	6000.0	0.4
20274092	8.0	100.0	0.4
20274108	8.0	150.0	0.4
20274115	8.0	200.0	0.4
20274122	8.0	250.0	0.4
20274139	8.0	300.0	0.4
20274146	8.0	350.0	0.4
20274153	8.0	400.0	0.4
20274160	8.0	450.0	0.4
20274177	8.0	500.0	0.4
20274184	8.0	550.0	0.4
20274191	8.0	600.0	0.4

Hardened Steel Shafts

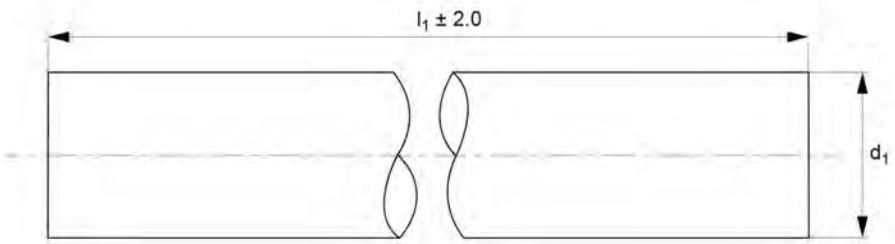



Part Number	d1 tol. h6	l1	Depth of hardness min
20274207	8.0	650.0	0.4
20274214	8.0	700.0	0.4
20274221	8.0	750.0	0.4
20274238	8.0	800.0	0.4
20274245	8.0	850.0	0.4
20274252	8.0	900.0	0.4
20274269	8.0	950.0	0.4
20274276	8.0	1000.0	0.4
20274283	8.0	1050.0	0.4
20274290	8.0	1100.0	0.4
20274306	8.0	1150.0	0.4
20274313	8.0	1200.0	0.4
20274320	8.0	1250.0	0.4
20274337	8.0	1300.0	0.4
20274344	8.0	1350.0	0.4
20274351	8.0	1400.0	0.4
20274368	8.0	1450.0	0.4
20274375	8.0	1500.0	0.4
20274382	8.0	1550.0	0.4
20274399	8.0	1600.0	0.4
20274405	8.0	1650.0	0.4
20274412	8.0	1700.0	0.4
20274429	8.0	1750.0	0.4
20274436	8.0	1800.0	0.4
20274443	8.0	1850.0	0.4
20274450	8.0	1900.0	0.4
20274467	8.0	1950.0	0.4

Hardened Steel Shafts

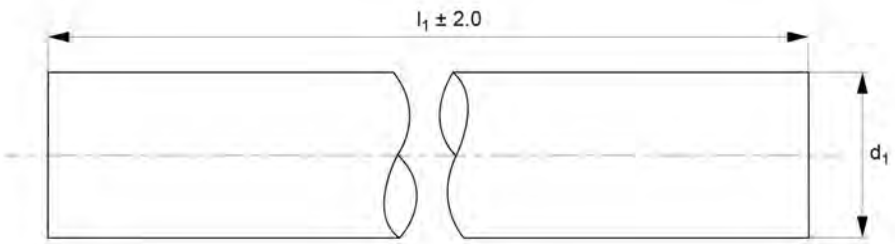



Part Number	d1 tol. h6	l1	Depth of hardness min
20274474	8.0	2000.0	0.4
20274481	8.0	2050.0	0.4
20274498	8.0	2100.0	0.4
20274504	8.0	2150.0	0.4
20274511	8.0	2200.0	0.4
20274528	8.0	2250.0	0.4
20274535	8.0	2300.0	0.4
20274542	8.0	2350.0	0.4
20274559	8.0	2400.0	0.4
20274566	8.0	2450.0	0.4
20274573	8.0	2500.0	0.4
20274580	8.0	2550.0	0.4
20274597	8.0	2600.0	0.4
20274603	8.0	2650.0	0.4
20274610	8.0	2700.0	0.4
20274627	8.0	2750.0	0.4
20274634	8.0	2800.0	0.4
20274641	8.0	2850.0	0.4
20274658	8.0	2900.0	0.4
20274665	8.0	2950.0	0.4
20274672	8.0	3000.0	0.4
20274689	8.0	3050.0	0.4
20274696	8.0	3100.0	0.4
20274702	8.0	3150.0	0.4
20274719	8.0	3200.0	0.4
20274726	8.0	3250.0	0.4
20274733	8.0	3300.0	0.4

Hardened Steel Shafts

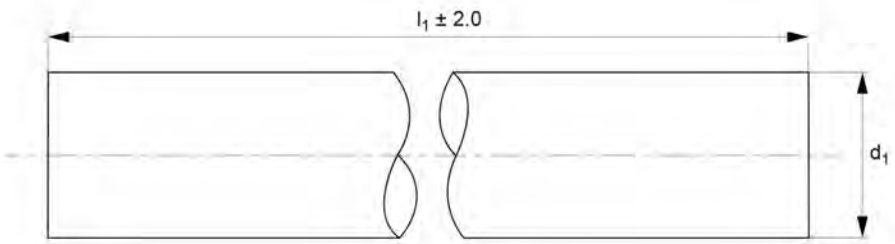



Part Number	d1 tol. h6	l1	Depth of hardness min
20274740	8.0	3350.0	0.4
20274757	8.0	3400.0	0.4
20274764	8.0	3450.0	0.4
20274771	8.0	3500.0	0.4
20274788	8.0	3550.0	0.4
20274795	8.0	3600.0	0.4
20274801	8.0	3650.0	0.4
20274818	8.0	3700.0	0.4
20274825	8.0	3750.0	0.4
20274832	8.0	3800.0	0.4
20274849	8.0	3850.0	0.4
20274856	8.0	3900.0	0.4
20274863	8.0	3950.0	0.4
20274870	8.0	4000.0	0.4
20274887	8.0	4050.0	0.4
20274894	8.0	4100.0	0.4
20274900	8.0	4150.0	0.4
20274917	8.0	4200.0	0.4
20274924	8.0	4250.0	0.4
20274931	8.0	4300.0	0.4
20274948	8.0	4350.0	0.4
20274955	8.0	4400.0	0.4
20274962	8.0	4450.0	0.4
20274979	8.0	4500.0	0.4
20274986	8.0	4550.0	0.4
20274993	8.0	4600.0	0.4
20275006	8.0	4650.0	0.4

Hardened Steel Shafts

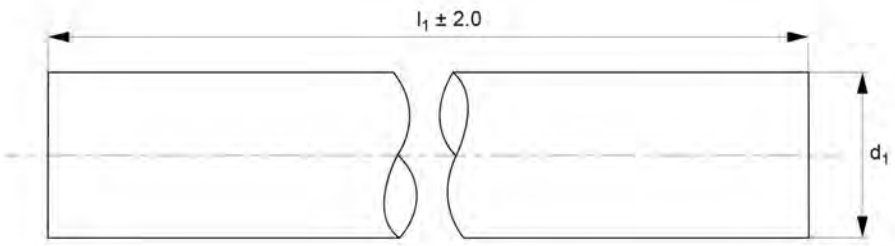



Part Number	d1 tol. h6	l1	Depth of hardness min
20275013	8.0	4700.0	0.4
20275020	8.0	4750.0	0.4
20275037	8.0	4800.0	0.4
20275044	8.0	4850.0	0.4
20275051	8.0	4900.0	0.4
20275068	8.0	4950.0	0.4
20275075	8.0	5000.0	0.4
20275082	8.0	5050.0	0.4
20275099	8.0	5100.0	0.4
20275105	8.0	5150.0	0.4
20275112	8.0	5200.0	0.4
20275129	8.0	5250.0	0.4
20275136	8.0	5300.0	0.4
20275143	8.0	5350.0	0.4
20275150	8.0	5400.0	0.4
20275167	8.0	5450.0	0.4
20275174	8.0	5500.0	0.4
20275181	8.0	5550.0	0.4
20275198	8.0	5600.0	0.4
20275204	8.0	5650.0	0.4
20275211	8.0	5700.0	0.4
20275228	8.0	5750.0	0.4
20275235	8.0	5800.0	0.4
20275242	8.0	5850.0	0.4
20275259	8.0	5900.0	0.4
20275266	8.0	5950.0	0.4
20275273	8.0	6000.0	0.4

Hardened Steel Shafts

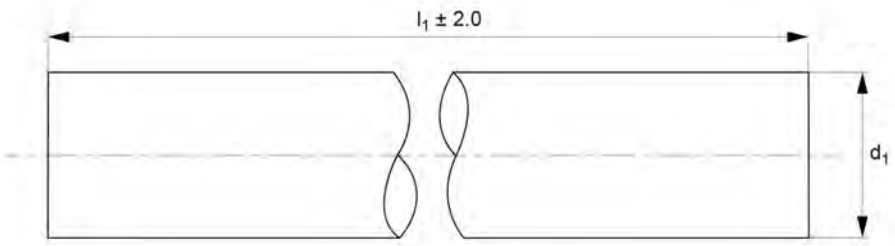



Part Number	d1 tol. h6	l1	Depth of hardness min
20275280	10.0	100.0	0.4
20275297	10.0	150.0	0.4
20275303	10.0	200.0	0.4
20275310	10.0	250.0	0.4
20275327	10.0	300.0	0.4
20275334	10.0	350.0	0.4
20275341	10.0	400.0	0.4
20275358	10.0	450.0	0.4
20275365	10.0	500.0	0.4
20275372	10.0	550.0	0.4
20275389	10.0	600.0	0.4
20275396	10.0	650.0	0.4
20275402	10.0	700.0	0.4
20275419	10.0	750.0	0.4
20275426	10.0	800.0	0.4
20275433	10.0	850.0	0.4
20275440	10.0	900.0	0.4
20275457	10.0	950.0	0.4
20275464	10.0	1000.0	0.4
20275471	10.0	1050.0	0.4
20275488	10.0	1100.0	0.4
20275495	10.0	1150.0	0.4
20275501	10.0	1200.0	0.4
20275518	10.0	1250.0	0.4
20275525	10.0	1300.0	0.4
20275532	10.0	1350.0	0.4
20275549	10.0	1400.0	0.4

Hardened Steel Shafts

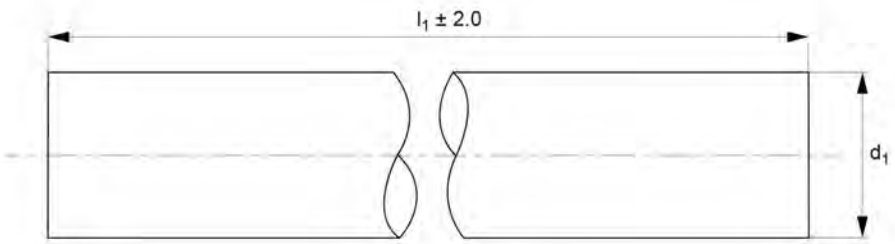



Part Number	d1 tol. h6	l1	Depth of hardness min
20275556	10.0	1450.0	0.4
20275563	10.0	1500.0	0.4
20275570	10.0	1550.0	0.4
20275587	10.0	1600.0	0.4
20275594	10.0	1650.0	0.4
20275600	10.0	1700.0	0.4
20275617	10.0	1750.0	0.4
20275624	10.0	1800.0	0.4
20275631	10.0	1850.0	0.4
20275648	10.0	1900.0	0.4
20275655	10.0	1950.0	0.4
20275662	10.0	2000.0	0.4
20275679	10.0	2050.0	0.4
20275686	10.0	2100.0	0.4
20275693	10.0	2150.0	0.4
20275709	10.0	2200.0	0.4
20275716	10.0	2250.0	0.4
20275723	10.0	2300.0	0.4
20275730	10.0	2350.0	0.4
20275747	10.0	2400.0	0.4
20275754	10.0	2450.0	0.4
20275761	10.0	2500.0	0.4
20275778	10.0	2550.0	0.4
20275785	10.0	2600.0	0.4
20275792	10.0	2650.0	0.4
20275808	10.0	2700.0	0.4
20275815	10.0	2750.0	0.4

Hardened Steel Shafts

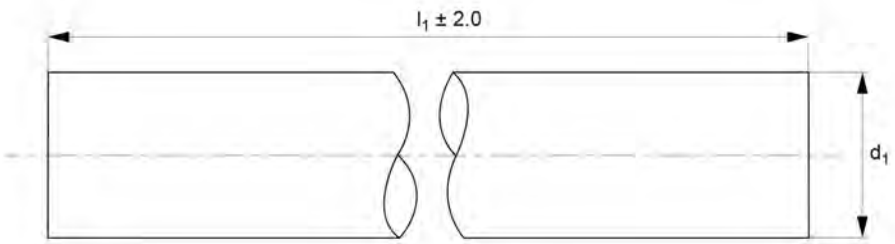



Part Number	d1 tol. h6	l1	Depth of hardness min
20275822	10.0	2800.0	0.4
20275839	10.0	2850.0	0.4
20275846	10.0	2900.0	0.4
20275853	10.0	2950.0	0.4
20275860	10.0	3000.0	0.4
20275877	10.0	3050.0	0.4
20275884	10.0	3100.0	0.4
20275891	10.0	3150.0	0.4
20275907	10.0	3200.0	0.4
20275914	10.0	3250.0	0.4
20275921	10.0	3300.0	0.4
20275938	10.0	3350.0	0.4
20275945	10.0	3400.0	0.4
20275952	10.0	3450.0	0.4
20275969	10.0	3500.0	0.4
20275976	10.0	3550.0	0.4
20275983	10.0	3600.0	0.4
20275990	10.0	3650.0	0.4
20276003	10.0	3700.0	0.4
20276010	10.0	3750.0	0.4
20276027	10.0	3800.0	0.4
20276034	10.0	3850.0	0.4
20276041	10.0	3900.0	0.4
20276058	10.0	3950.0	0.4
20276065	10.0	4000.0	0.4
20276072	10.0	4050.0	0.4
20276089	10.0	4100.0	0.4

Hardened Steel Shafts

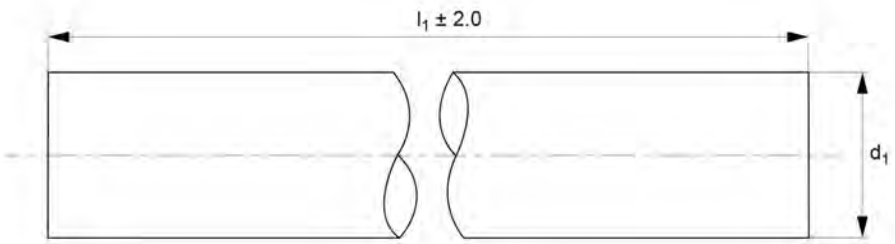



Part Number	d1 tol. h6	l1	Depth of hardness min
20276096	10.0	4150.0	0.4
20276102	10.0	4200.0	0.4
20276119	10.0	4250.0	0.4
20276126	10.0	4300.0	0.4
20276133	10.0	4350.0	0.4
20276140	10.0	4400.0	0.4
20276157	10.0	4450.0	0.4
20276164	10.0	4500.0	0.4
20276171	10.0	4550.0	0.4
20276188	10.0	4600.0	0.4
20276195	10.0	4650.0	0.4
20276201	10.0	4700.0	0.4
20276218	10.0	4750.0	0.4
20276225	10.0	4800.0	0.4
20276232	10.0	4850.0	0.4
20276249	10.0	4900.0	0.4
20276256	10.0	4950.0	0.4
20276263	10.0	5000.0	0.4
20276270	10.0	5050.0	0.4
20276287	10.0	5100.0	0.4
20276294	10.0	5150.0	0.4
20276300	10.0	5200.0	0.4
20276317	10.0	5250.0	0.4
20276324	10.0	5300.0	0.4
20276331	10.0	5350.0	0.4
20276348	10.0	5400.0	0.4
20276355	10.0	5450.0	0.4

Hardened Steel Shafts

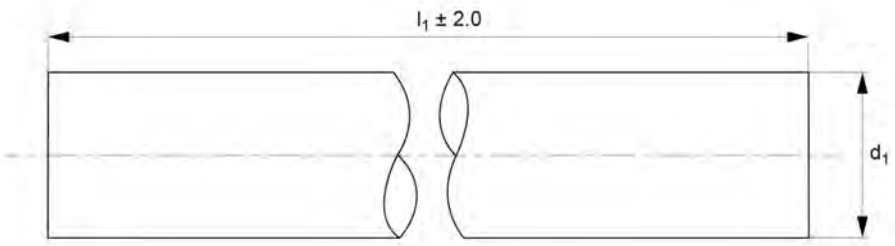



Part Number	d1 tol. h6	l1	Depth of hardness min
20276362	10.0	5500.0	0.4
20276379	10.0	5550.0	0.4
20276386	10.0	5600.0	0.4
20276393	10.0	5650.0	0.4
20276409	10.0	5700.0	0.4
20276416	10.0	5750.0	0.4
20276423	10.0	5800.0	0.4
20276430	10.0	5850.0	0.4
20276447	10.0	5900.0	0.4
20276454	10.0	5950.0	0.4
20276461	10.0	6000.0	0.4
20276478	12.0	100.0	0.6
20276485	12.0	150.0	0.6
20276492	12.0	200.0	0.6
20276508	12.0	250.0	0.6
20276515	12.0	300.0	0.6
20276522	12.0	350.0	0.6
20276539	12.0	400.0	0.6
20276546	12.0	450.0	0.6
20276553	12.0	500.0	0.6
20276560	12.0	550.0	0.6
20276577	12.0	600.0	0.6
20276584	12.0	650.0	0.6
20276591	12.0	700.0	0.6
20276607	12.0	750.0	0.6
20276614	12.0	800.0	0.6
20276621	12.0	850.0	0.6

Hardened Steel Shafts

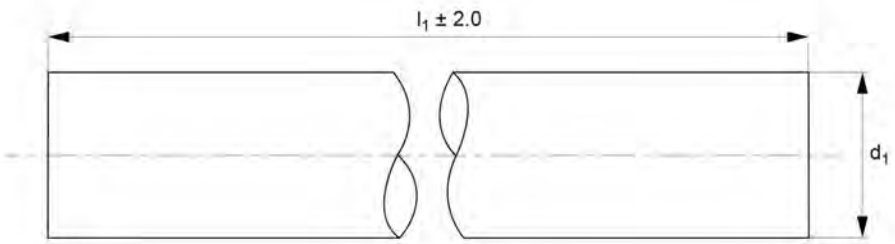



Part Number	d1 tol. h6	l1	Depth of hardness min
20276638	12.0	900.0	0.6
20276645	12.0	950.0	0.6
20276652	12.0	1000.0	0.6
20276669	12.0	1050.0	0.6
20276676	12.0	1100.0	0.6
20276683	12.0	1150.0	0.6
20276690	12.0	1200.0	0.6
20276706	12.0	1250.0	0.6
20276713	12.0	1300.0	0.6
20276720	12.0	1350.0	0.6
20276737	12.0	1400.0	0.6
20276744	12.0	1450.0	0.6
20276751	12.0	1500.0	0.6
20276768	12.0	1550.0	0.6
20276775	12.0	1600.0	0.6
20276782	12.0	1650.0	0.6
20276799	12.0	1700.0	0.6
20276805	12.0	1750.0	0.6
20276812	12.0	1800.0	0.6
20276829	12.0	1850.0	0.6
20276836	12.0	1900.0	0.6
20276843	12.0	1950.0	0.6
20276850	12.0	2000.0	0.6
20276867	12.0	2050.0	0.6
20276874	12.0	2100.0	0.6
20276881	12.0	2150.0	0.6
20276898	12.0	2200.0	0.6

Hardened Steel Shafts

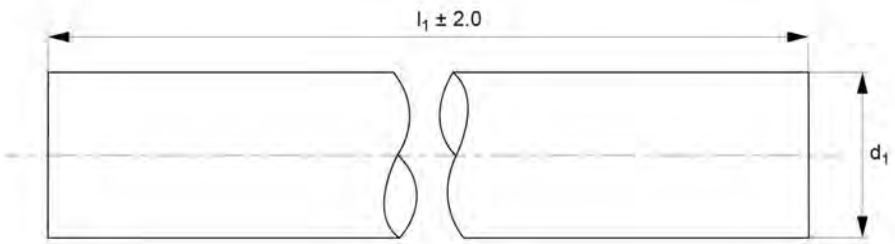



Part Number	d1 tol. h6	l1	Depth of hardness min
20276904	12.0	2250.0	0.6
20276911	12.0	2300.0	0.6
20276928	12.0	2350.0	0.6
20276935	12.0	2400.0	0.6
20276942	12.0	2450.0	0.6
20276959	12.0	2500.0	0.6
20276966	12.0	2550.0	0.6
20276973	12.0	2600.0	0.6
20276980	12.0	2650.0	0.6
20276997	12.0	2700.0	0.6
20277000	12.0	2750.0	0.6
20277017	12.0	2800.0	0.6
20277024	12.0	2850.0	0.6
20277031	12.0	2900.0	0.6
20277048	12.0	2950.0	0.6
20277055	12.0	3000.0	0.6
20277062	12.0	3050.0	0.6
20277079	12.0	3100.0	0.6
20277086	12.0	3150.0	0.6
20277093	12.0	3200.0	0.6
20277109	12.0	3250.0	0.6
20277116	12.0	3300.0	0.6
20277123	12.0	3350.0	0.6
20277130	12.0	3400.0	0.6
20277147	12.0	3450.0	0.6
20277154	12.0	3500.0	0.6
20277161	12.0	3550.0	0.6

Hardened Steel Shafts

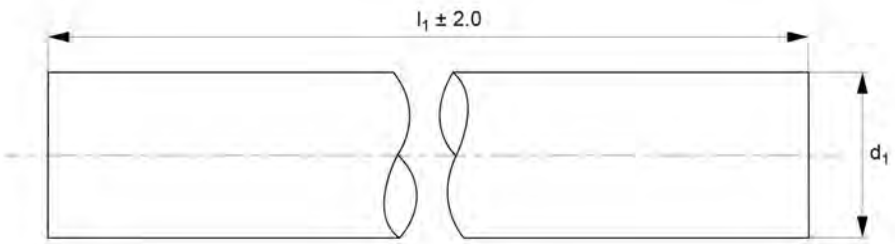



Part Number	d1 tol. h6	l1	Depth of hardness min
20277178	12.0	3600.0	0.6
20277185	12.0	3650.0	0.6
20277192	12.0	3700.0	0.6
20277208	12.0	3750.0	0.6
20277215	12.0	3800.0	0.6
20277222	12.0	3850.0	0.6
20277239	12.0	3900.0	0.6
20277246	12.0	3950.0	0.6
20277253	12.0	4000.0	0.6
20277260	12.0	4050.0	0.6
20277277	12.0	4100.0	0.6
20277284	12.0	4150.0	0.6
20277291	12.0	4200.0	0.6
20277307	12.0	4250.0	0.6
20277314	12.0	4300.0	0.6
20277321	12.0	4350.0	0.6
20277338	12.0	4400.0	0.6
20277345	12.0	4450.0	0.6
20277352	12.0	4500.0	0.6
20277369	12.0	4550.0	0.6
20277376	12.0	4600.0	0.6
20277383	12.0	4650.0	0.6
20277390	12.0	4700.0	0.6
20277406	12.0	4750.0	0.6
20277413	12.0	4800.0	0.6
20277420	12.0	4850.0	0.6
20277437	12.0	4900.0	0.6

Hardened Steel Shafts

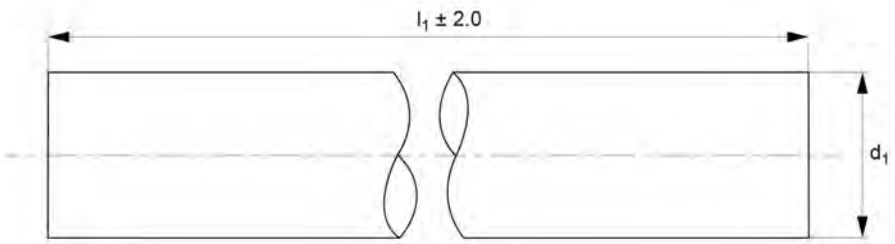



Part Number	d1 tol. h6	l1	Depth of hardness min
20277444	12.0	4950.0	0.6
20277451	12.0	5000.0	0.6
20277468	12.0	5050.0	0.6
20277475	12.0	5100.0	0.6
20277482	12.0	5150.0	0.6
20277499	12.0	5200.0	0.6
20277505	12.0	5250.0	0.6
20277512	12.0	5300.0	0.6
20277529	12.0	5350.0	0.6
20277536	12.0	5400.0	0.6
20277543	12.0	5450.0	0.6
20277550	12.0	5500.0	0.6
20277567	12.0	5550.0	0.6
20277574	12.0	5600.0	0.6
20277581	12.0	5650.0	0.6
20277598	12.0	5700.0	0.6
20277604	12.0	5750.0	0.6
20277611	12.0	5800.0	0.6
20277628	12.0	5850.0	0.6
20277635	12.0	5900.0	0.6
20277642	12.0	5950.0	0.6
20277659	12.0	6000.0	0.6
20277666	16.0	100.0	0.6
20277673	16.0	150.0	0.6
20277680	16.0	200.0	0.6
20277697	16.0	250.0	0.6
20277703	16.0	300.0	0.6

Hardened Steel Shafts

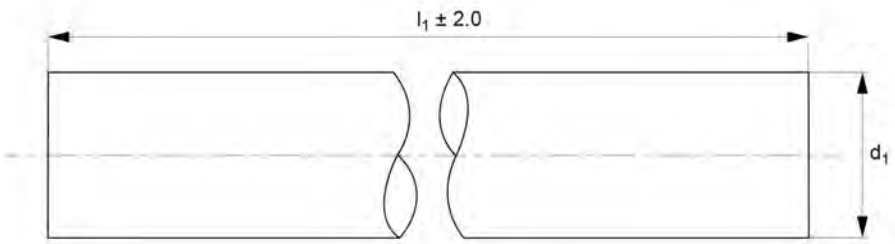



Part Number	d1 tol. h6	l1	Depth of hardness min
20277710	16.0	350.0	0.6
20277727	16.0	400.0	0.6
20277734	16.0	450.0	0.6
20277741	16.0	500.0	0.6
20277758	16.0	550.0	0.6
20277765	16.0	600.0	0.6
20277772	16.0	650.0	0.6
20277789	16.0	700.0	0.6
20277796	16.0	750.0	0.6
20277802	16.0	800.0	0.6
20277819	16.0	850.0	0.6
20277826	16.0	900.0	0.6
20277833	16.0	950.0	0.6
20277840	16.0	1000.0	0.6
20277857	16.0	1050.0	0.6
20277864	16.0	1100.0	0.6
20277871	16.0	1150.0	0.6
20277888	16.0	1200.0	0.6
20277895	16.0	1250.0	0.6
20277901	16.0	1300.0	0.6
20277918	16.0	1350.0	0.6
20277925	16.0	1400.0	0.6
20277932	16.0	1450.0	0.6
20277949	16.0	1500.0	0.6
20277956	16.0	1550.0	0.6
20277963	16.0	1600.0	0.6
20277970	16.0	1650.0	0.6

Hardened Steel Shafts

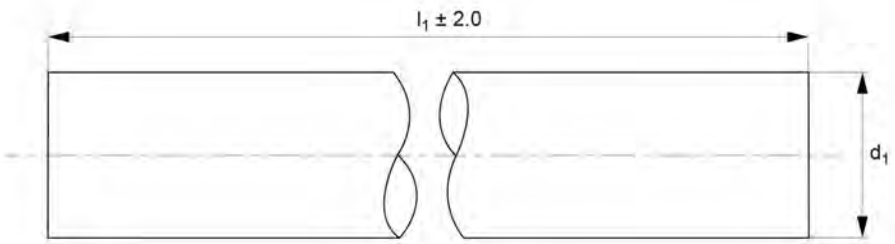



Part Number	d1 tol. h6	l1	Depth of hardness min
20277987	16.0	1700.0	0.6
20277994	16.0	1750.0	0.6
20278007	16.0	1800.0	0.6
20278014	16.0	1850.0	0.6
20278021	16.0	1900.0	0.6
20278038	16.0	1950.0	0.6
20278045	16.0	2000.0	0.6
20278052	16.0	2050.0	0.6
20278069	16.0	2100.0	0.6
20278076	16.0	2150.0	0.6
20278083	16.0	2200.0	0.6
20278090	16.0	2250.0	0.6
20278106	16.0	2300.0	0.6
20278113	16.0	2350.0	0.6
20278120	16.0	2400.0	0.6
20278137	16.0	2450.0	0.6
20278144	16.0	2500.0	0.6
20278151	16.0	2550.0	0.6
20278168	16.0	2600.0	0.6
20278175	16.0	2650.0	0.6
20278182	16.0	2700.0	0.6
20278199	16.0	2750.0	0.6
20278205	16.0	2800.0	0.6
20278212	16.0	2850.0	0.6
20278229	16.0	2900.0	0.6
20278236	16.0	2950.0	0.6
20278243	16.0	3000.0	0.6

Hardened Steel Shafts

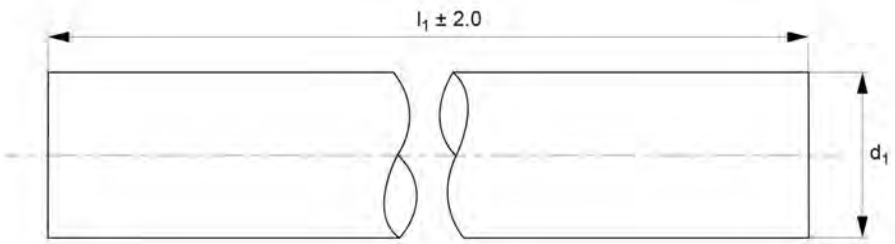



Part Number	d1 tol. h6	l1	Depth of hardness min
20278250	16.0	3050.0	0.6
20278267	16.0	3100.0	0.6
20278274	16.0	3150.0	0.6
20278281	16.0	3200.0	0.6
20278298	16.0	3250.0	0.6
20278304	16.0	3300.0	0.6
20278311	16.0	3350.0	0.6
20278328	16.0	3400.0	0.6
20278335	16.0	3450.0	0.6
20278342	16.0	3500.0	0.6
20278359	16.0	3550.0	0.6
20278366	16.0	3600.0	0.6
20278373	16.0	3650.0	0.6
20278380	16.0	3700.0	0.6
20278397	16.0	3750.0	0.6
20278403	16.0	3800.0	0.6
20278410	16.0	3850.0	0.6
20278427	16.0	3900.0	0.6
20278434	16.0	3950.0	0.6
20278441	16.0	4000.0	0.6
20278458	16.0	4050.0	0.6
20278465	16.0	4100.0	0.6
20278472	16.0	4150.0	0.6
20278489	16.0	4200.0	0.6
20278496	16.0	4250.0	0.6
20278502	16.0	4300.0	0.6
20278519	16.0	4350.0	0.6

Hardened Steel Shafts

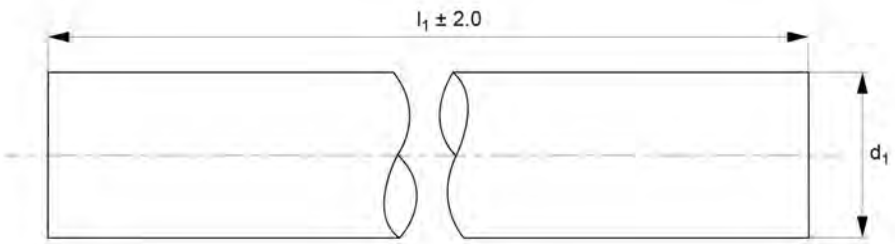



Part Number	d1 tol. h6	l1	Depth of hardness min
20278526	16.0	4400.0	0.6
20278533	16.0	4450.0	0.6
20278540	16.0	4500.0	0.6
20278557	16.0	4550.0	0.6
20278564	16.0	4600.0	0.6
20278571	16.0	4650.0	0.6
20278588	16.0	4700.0	0.6
20278595	16.0	4750.0	0.6
20278601	16.0	4800.0	0.6
20278618	16.0	4850.0	0.6
20278625	16.0	4900.0	0.6
20278632	16.0	4950.0	0.6
20278649	16.0	5000.0	0.6
20278656	16.0	5050.0	0.6
20278663	16.0	5100.0	0.6
20278670	16.0	5150.0	0.6
20278687	16.0	5200.0	0.6
20278694	16.0	5250.0	0.6
20278700	16.0	5300.0	0.6
20278717	16.0	5350.0	0.6
20278724	16.0	5400.0	0.6
20278731	16.0	5450.0	0.6
20278748	16.0	5500.0	0.6
20278755	16.0	5550.0	0.6
20278762	16.0	5600.0	0.6
20278779	16.0	5650.0	0.6
20278786	16.0	5700.0	0.6

Hardened Steel Shafts

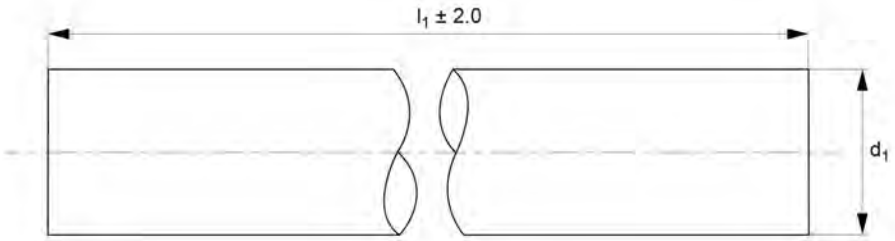



Part Number	d1 tol. h6	l1	Depth of hardness min
20278793	16.0	5750.0	0.6
20278809	16.0	5800.0	0.6
20278816	16.0	5850.0	0.6
20278823	16.0	5900.0	0.6
20278830	16.0	5950.0	0.6
20278847	16.0	6000.0	0.6
20278854	20.0	100.0	0.9
20278861	20.0	150.0	0.9
20278878	20.0	200.0	0.9
20278885	20.0	250.0	0.9
20278892	20.0	300.0	0.9
20278908	20.0	350.0	0.9
20278915	20.0	400.0	0.9
20278922	20.0	450.0	0.9
20278939	20.0	500.0	0.9
20278946	20.0	550.0	0.9
20278953	20.0	600.0	0.9
20278960	20.0	650.0	0.9
20278977	20.0	700.0	0.9
20278984	20.0	750.0	0.9
20278991	20.0	800.0	0.9
20279004	20.0	850.0	0.9
20279011	20.0	900.0	0.9
20279028	20.0	950.0	0.9
20279035	20.0	1000.0	0.9
20279042	20.0	1050.0	0.9
20279059	20.0	1100.0	0.9

Hardened Steel Shafts

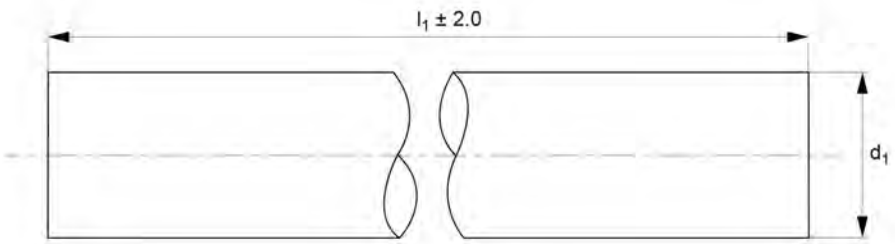



Part Number	d1 tol. h6	l1	Depth of hardness min
20279066	20.0	1150.0	0.9
20279073	20.0	1200.0	0.9
20279080	20.0	1250.0	0.9
20279097	20.0	1300.0	0.9
20279103	20.0	1350.0	0.9
20279110	20.0	1400.0	0.9
20279127	20.0	1450.0	0.9
20279134	20.0	1500.0	0.9
20279141	20.0	1550.0	0.9
20279158	20.0	1600.0	0.9
20279165	20.0	1650.0	0.9
20279172	20.0	1700.0	0.9
20279189	20.0	1750.0	0.9
20279196	20.0	1800.0	0.9
20279202	20.0	1850.0	0.9
20279219	20.0	1900.0	0.9
20279226	20.0	1950.0	0.9
20279233	20.0	2000.0	0.9
20279240	20.0	2050.0	0.9
20279257	20.0	2100.0	0.9
20279264	20.0	2150.0	0.9
20279271	20.0	2200.0	0.9
20279288	20.0	2250.0	0.9
20279295	20.0	2300.0	0.9
20279301	20.0	2350.0	0.9
20279318	20.0	2400.0	0.9
20279325	20.0	2450.0	0.9

Hardened Steel Shafts

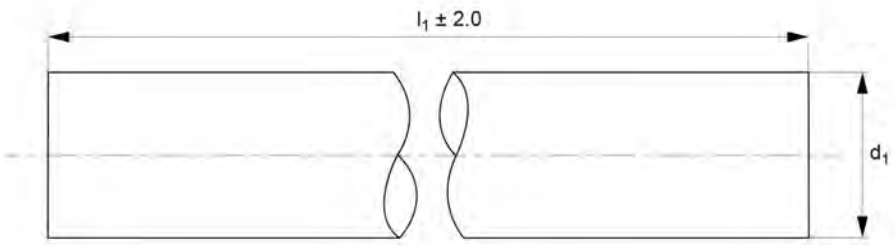



Part Number	d1 tol. h6	l1	Depth of hardness min
20279332	20.0	2500.0	0.9
20279349	20.0	2550.0	0.9
20279356	20.0	2600.0	0.9
20279363	20.0	2650.0	0.9
20279370	20.0	2700.0	0.9
20279387	20.0	2750.0	0.9
20279394	20.0	2800.0	0.9
20279400	20.0	2850.0	0.9
20279417	20.0	2900.0	0.9
20279424	20.0	2950.0	0.9
20279431	20.0	3000.0	0.9
20279448	20.0	3050.0	0.9
20279455	20.0	3100.0	0.9
20279462	20.0	3150.0	0.9
20279479	20.0	3200.0	0.9
20279486	20.0	3250.0	0.9
20279493	20.0	3300.0	0.9
20279509	20.0	3350.0	0.9
20279516	20.0	3400.0	0.9
20279523	20.0	3450.0	0.9
20279530	20.0	3500.0	0.9
20279547	20.0	3550.0	0.9
20279554	20.0	3600.0	0.9
20279561	20.0	3650.0	0.9
20279578	20.0	3700.0	0.9
20279585	20.0	3750.0	0.9
20279592	20.0	3800.0	0.9

Hardened Steel Shafts

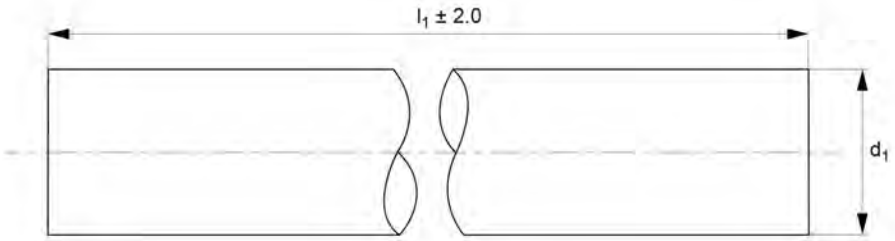



Part Number	d1 tol. h6	l1	Depth of hardness min
20279608	20.0	3850.0	0.9
20279615	20.0	3900.0	0.9
20279622	20.0	3950.0	0.9
20279639	20.0	4000.0	0.9
20279646	20.0	4050.0	0.9
20279653	20.0	4100.0	0.9
20279660	20.0	4150.0	0.9
20279677	20.0	4200.0	0.9
20279684	20.0	4250.0	0.9
20279691	20.0	4300.0	0.9
20279707	20.0	4350.0	0.9
20279714	20.0	4400.0	0.9
20279721	20.0	4450.0	0.9
20279738	20.0	4500.0	0.9
20279745	20.0	4550.0	0.9
20279752	20.0	4600.0	0.9
20279769	20.0	4650.0	0.9
20279776	20.0	4700.0	0.9
20279783	20.0	4750.0	0.9
20279790	20.0	4800.0	0.9
20279806	20.0	4850.0	0.9
20279813	20.0	4900.0	0.9
20279820	20.0	4950.0	0.9
20279837	20.0	5000.0	0.9
20279844	20.0	5050.0	0.9
20279851	20.0	5100.0	0.9
20279868	20.0	5150.0	0.9

Hardened Steel Shafts

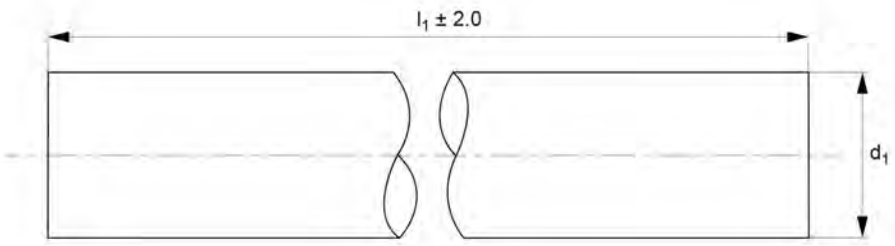



Part Number	d1 tol. h6	l1	Depth of hardness min
20279875	20.0	5200.0	0.9
20279882	20.0	5250.0	0.9
20279899	20.0	5300.0	0.9
20279905	20.0	5350.0	0.9
20279912	20.0	5400.0	0.9
20279929	20.0	5450.0	0.9
20279936	20.0	5500.0	0.9
20279943	20.0	5550.0	0.9
20279950	20.0	5600.0	0.9
20279967	20.0	5650.0	0.9
20279974	20.0	5700.0	0.9
20279981	20.0	5750.0	0.9
20279998	20.0	5800.0	0.9
20280000	20.0	5850.0	0.9
20280017	20.0	5900.0	0.9
20280024	20.0	5950.0	0.9
20280031	20.0	6000.0	0.9
20280048	25.0	100.0	0.9
20280055	25.0	150.0	0.9
20280062	25.0	200.0	0.9
20280079	25.0	250.0	0.9
20280086	25.0	300.0	0.9
20280093	25.0	350.0	0.9
20280109	25.0	400.0	0.9
20280116	25.0	450.0	0.9
20280123	25.0	500.0	0.9
20280130	25.0	550.0	0.9

Hardened Steel Shafts

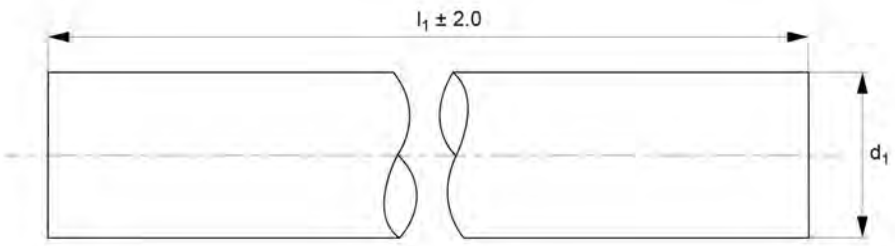



Part Number	d1 tol. h6	l1	Depth of hardness min
20280147	25.0	600.0	0.9
20280154	25.0	650.0	0.9
20280161	25.0	700.0	0.9
20280178	25.0	750.0	0.9
20280185	25.0	800.0	0.9
20280192	25.0	850.0	0.9
20280208	25.0	900.0	0.9
20280215	25.0	950.0	0.9
20280222	25.0	1000.0	0.9
20338145	25.0	1050.0	0.9
20280239	25.0	1100.0	0.9
20280246	25.0	1150.0	0.9
20280253	25.0	1200.0	0.9
20280260	25.0	1250.0	0.9
20280277	25.0	1300.0	0.9
20280284	25.0	1350.0	0.9
20280291	25.0	1400.0	0.9
20280307	25.0	1450.0	0.9
20280314	25.0	1500.0	0.9
20280321	25.0	1550.0	0.9
20280338	25.0	1600.0	0.9
20280345	25.0	1650.0	0.9
20280352	25.0	1700.0	0.9
20280369	25.0	1750.0	0.9
20280376	25.0	1800.0	0.9
20280383	25.0	1850.0	0.9
20280390	25.0	1900.0	0.9

Hardened Steel Shafts

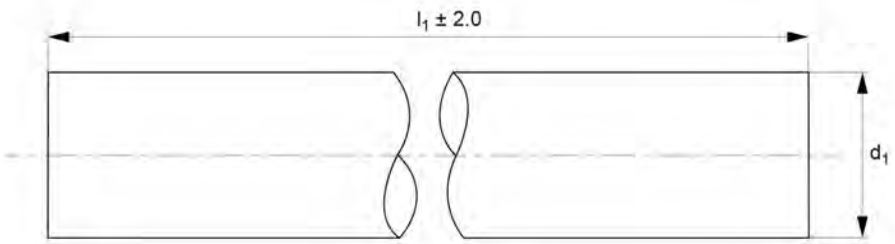



Part Number	d1 tol. h6	l1	Depth of hardness min
20280406	25.0	1950.0	0.9
20280413	25.0	2000.0	0.9
20280420	25.0	2050.0	0.9
20280437	25.0	2100.0	0.9
20280444	25.0	2150.0	0.9
20280451	25.0	2200.0	0.9
20280468	25.0	2250.0	0.9
20280475	25.0	2300.0	0.9
20280482	25.0	2350.0	0.9
20280499	25.0	2400.0	0.9
20280505	25.0	2450.0	0.9
20280512	25.0	2500.0	0.9
20280529	25.0	2550.0	0.9
20280536	25.0	2600.0	0.9
20280543	25.0	2650.0	0.9
20280550	25.0	2700.0	0.9
20280567	25.0	2750.0	0.9
20280574	25.0	2800.0	0.9
20280581	25.0	2850.0	0.9
20280598	25.0	2900.0	0.9
20280604	25.0	2950.0	0.9
20280611	25.0	3000.0	0.9
20280628	25.0	3050.0	0.9
20280635	25.0	3100.0	0.9
20280642	25.0	3150.0	0.9
20280659	25.0	3200.0	0.9
20280666	25.0	3250.0	0.9

Hardened Steel Shafts

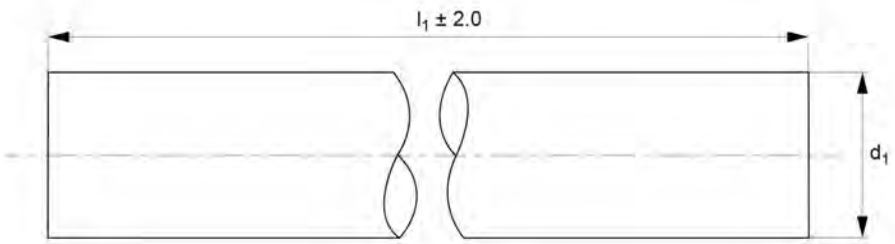



Part Number	d1 tol. h6	l1	Depth of hardness min
20280673	25.0	3300.0	0.9
20280680	25.0	3350.0	0.9
20280697	25.0	3400.0	0.9
20280703	25.0	3450.0	0.9
20280710	25.0	3500.0	0.9
20280727	25.0	3550.0	0.9
20280734	25.0	3600.0	0.9
20280741	25.0	3650.0	0.9
20280758	25.0	3700.0	0.9
20280765	25.0	3750.0	0.9
20280772	25.0	3800.0	0.9
20280789	25.0	3850.0	0.9
20280796	25.0	3900.0	0.9
20280802	25.0	3950.0	0.9
20280819	25.0	4000.0	0.9
20280826	25.0	4050.0	0.9
20280833	25.0	4100.0	0.9
20280840	25.0	4150.0	0.9
20280857	25.0	4200.0	0.9
20280864	25.0	4250.0	0.9
20280871	25.0	4300.0	0.9
20280888	25.0	4350.0	0.9
20280895	25.0	4400.0	0.9
20280901	25.0	4450.0	0.9
20280918	25.0	4500.0	0.9
20280925	25.0	4550.0	0.9
20280932	25.0	4600.0	0.9

Hardened Steel Shafts

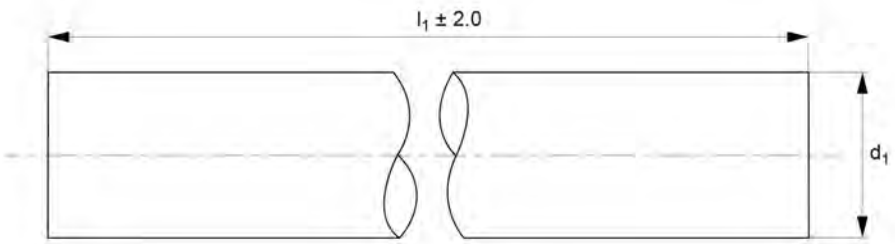



Part Number	d1 tol. h6	l1	Depth of hardness min
20280949	25.0	4650.0	0.9
20280956	25.0	4700.0	0.9
20280963	25.0	4750.0	0.9
20280970	25.0	4800.0	0.9
20280987	25.0	4850.0	0.9
20280994	25.0	4900.0	0.9
20281007	25.0	4950.0	0.9
20281014	25.0	5000.0	0.9
20281021	25.0	5050.0	0.9
20281038	25.0	5100.0	0.9
20281045	25.0	5150.0	0.9
20281052	25.0	5200.0	0.9
20281069	25.0	5250.0	0.9
20281076	25.0	5300.0	0.9
20281083	25.0	5350.0	0.9
20281090	25.0	5400.0	0.9
20281106	25.0	5450.0	0.9
20281113	25.0	5500.0	0.9
20281120	25.0	5550.0	0.9
20281137	25.0	5600.0	0.9
20281144	25.0	5650.0	0.9
20281151	25.0	5700.0	0.9
20281168	25.0	5750.0	0.9
20281175	25.0	5800.0	0.9
20281182	25.0	5850.0	0.9
20281199	25.0	5900.0	0.9
20281205	25.0	5950.0	0.9

Hardened Steel Shafts

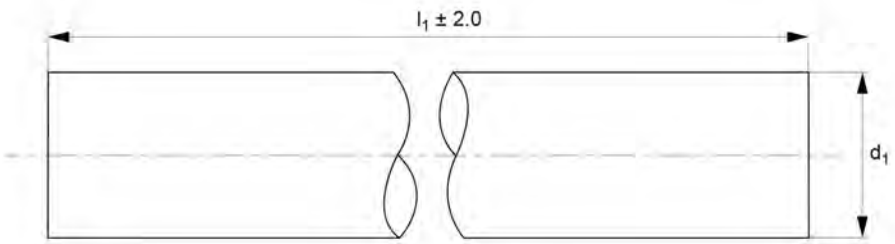



Part Number	d1 tol. h6	l1	Depth of hardness min
20281212	25.0	6000.0	0.9
20281229	30.0	100.0	1.5
20281236	30.0	150.0	1.5
20281243	30.0	200.0	1.5
20281250	30.0	250.0	1.5
20281267	30.0	300.0	1.5
20281274	30.0	350.0	1.5
20281281	30.0	400.0	1.5
20281298	30.0	450.0	1.5
20281304	30.0	500.0	1.5
20281311	30.0	550.0	1.5
20281328	30.0	600.0	1.5
20338138	30.0	650.0	1.5
20281335	30.0	700.0	1.5
20281342	30.0	750.0	1.5
20281359	30.0	800.0	1.5
20281366	30.0	850.0	1.5
20281373	30.0	900.0	1.5
20281380	30.0	950.0	1.5
20281397	30.0	1000.0	1.5
20281403	30.0	1050.0	1.5
20281410	30.0	1100.0	1.5
20281427	30.0	1150.0	1.5
20281434	30.0	1200.0	1.5
20281441	30.0	1250.0	1.5
20281458	30.0	1300.0	1.5
20281465	30.0	1350.0	1.5

Hardened Steel Shafts

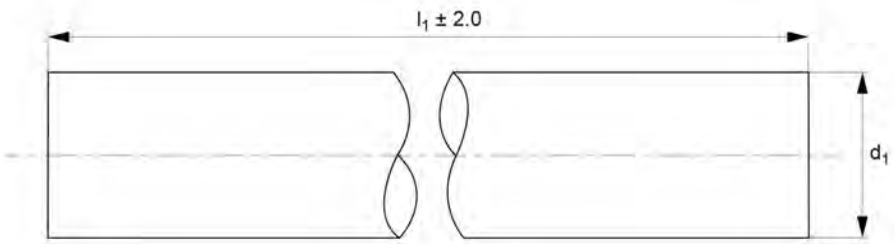



Part Number	d1 tol. h6	l1	Depth of hardness min
20281472	30.0	1400.0	1.5
20281489	30.0	1450.0	1.5
20281496	30.0	1500.0	1.5
20281502	30.0	1550.0	1.5
20281519	30.0	1600.0	1.5
20281526	30.0	1650.0	1.5
20281533	30.0	1700.0	1.5
20281540	30.0	1750.0	1.5
20281557	30.0	1800.0	1.5
20281564	30.0	1850.0	1.5
20281571	30.0	1900.0	1.5
20281588	30.0	1950.0	1.5
20281595	30.0	2000.0	1.5
20281601	30.0	2050.0	1.5
20281618	30.0	2100.0	1.5
20281625	30.0	2150.0	1.5
20281632	30.0	2200.0	1.5
20281649	30.0	2250.0	1.5
20281656	30.0	2300.0	1.5
20281663	30.0	2350.0	1.5
20281670	30.0	2400.0	1.5
20281687	30.0	2450.0	1.5
20281694	30.0	2500.0	1.5
20281700	30.0	2550.0	1.5
20281717	30.0	2600.0	1.5
20281724	30.0	2650.0	1.5
20281731	30.0	2700.0	1.5

Hardened Steel Shafts

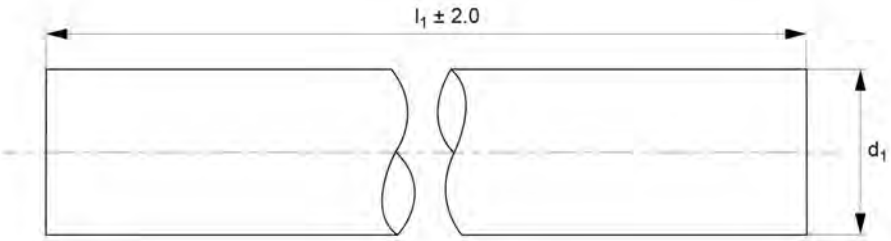



Part Number	d1 tol. h6	l1	Depth of hardness min
20281748	30.0	2750.0	1.5
20281755	30.0	2800.0	1.5
20281762	30.0	2850.0	1.5
20281779	30.0	2900.0	1.5
20281786	30.0	2950.0	1.5
20281793	30.0	3000.0	1.5
20281809	30.0	3050.0	1.5
20281816	30.0	3100.0	1.5
20281823	30.0	3150.0	1.5
20281830	30.0	3200.0	1.5
20281847	30.0	3250.0	1.5
20281854	30.0	3300.0	1.5
20281861	30.0	3350.0	1.5
20281878	30.0	3400.0	1.5
20281885	30.0	3450.0	1.5
20281892	30.0	3500.0	1.5
20281908	30.0	3550.0	1.5
20281915	30.0	3600.0	1.5
20281922	30.0	3650.0	1.5
20281939	30.0	3700.0	1.5
20281946	30.0	3750.0	1.5
20281953	30.0	3800.0	1.5
20281960	30.0	3850.0	1.5
20281977	30.0	3900.0	1.5
20281984	30.0	3950.0	1.5
20281991	30.0	4000.0	1.5
20282004	30.0	4050.0	1.5

Hardened Steel Shafts

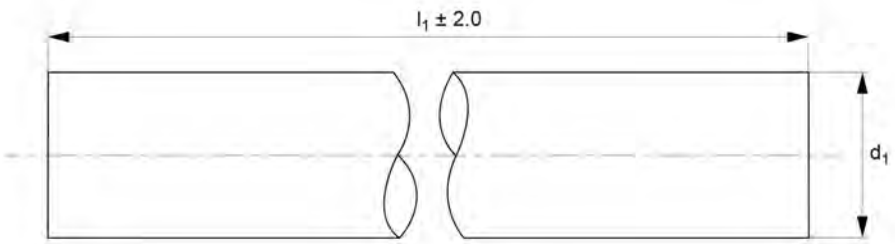



Part Number	d1 tol. h6	l1	Depth of hardness min
20282011	30.0	4100.0	1.5
20282028	30.0	4150.0	1.5
20282035	30.0	4200.0	1.5
20282042	30.0	4250.0	1.5
20282059	30.0	4300.0	1.5
20282066	30.0	4350.0	1.5
20282073	30.0	4400.0	1.5
20282080	30.0	4450.0	1.5
20282097	30.0	4500.0	1.5
20282103	30.0	4550.0	1.5
20282110	30.0	4600.0	1.5
20282127	30.0	4650.0	1.5
20282134	30.0	4700.0	1.5
20282141	30.0	4750.0	1.5
20282158	30.0	4800.0	1.5
20282165	30.0	4850.0	1.5
20282172	30.0	4900.0	1.5
20282189	30.0	4950.0	1.5
20282196	30.0	5000.0	1.5
20282202	30.0	5050.0	1.5
20282219	30.0	5100.0	1.5
20282226	30.0	5150.0	1.5
20282233	30.0	5200.0	1.5
20282240	30.0	5250.0	1.5
20282257	30.0	5300.0	1.5
20282264	30.0	5350.0	1.5
20282271	30.0	5400.0	1.5

Hardened Steel Shafts

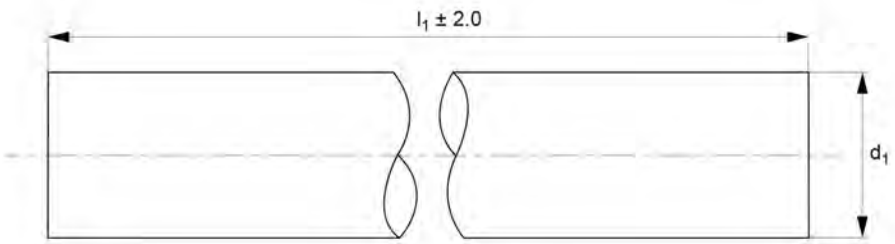



Part Number	d1 tol. h6	l1	Depth of hardness min
20282288	30.0	5450.0	1.5
20282295	30.0	5500.0	1.5
20282301	30.0	5550.0	1.5
20282318	30.0	5600.0	1.5
20282325	30.0	5650.0	1.5
20282332	30.0	5700.0	1.5
20282349	30.0	5750.0	1.5
20282356	30.0	5800.0	1.5
20282363	30.0	5850.0	1.5
20282370	30.0	5900.0	1.5
20282387	30.0	5950.0	1.5
20282394	30.0	6000.0	1.5
20282400	40.0	100.0	1.5
20282417	40.0	150.0	1.5
20282424	40.0	200.0	1.5
20282431	40.0	250.0	1.5
20282448	40.0	300.0	1.5
20282455	40.0	350.0	1.5
20282462	40.0	400.0	1.5
20282479	40.0	450.0	1.5
20282486	40.0	500.0	1.5
20282493	40.0	550.0	1.5
20282509	40.0	600.0	1.5
20282516	40.0	650.0	1.5
20282523	40.0	700.0	1.5
20282530	40.0	750.0	1.5
20282547	40.0	800.0	1.5

Hardened Steel Shafts

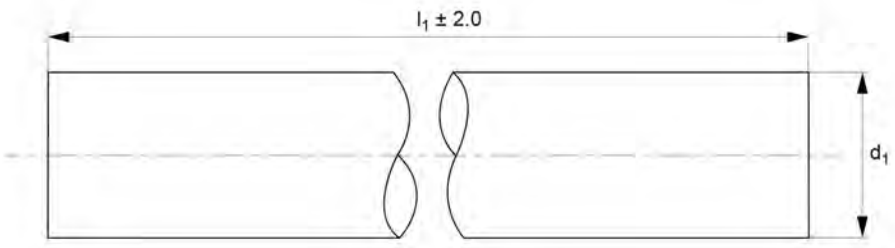



Part Number	d1 tol. h6	l1	Depth of hardness min
20282554	40.0	850.0	1.5
20282561	40.0	900.0	1.5
20282578	40.0	950.0	1.5
20282585	40.0	1000.0	1.5
20282592	40.0	1050.0	1.5
20282608	40.0	1100.0	1.5
20282615	40.0	1150.0	1.5
20282622	40.0	1200.0	1.5
20282639	40.0	1250.0	1.5
20282646	40.0	1300.0	1.5
20282653	40.0	1350.0	1.5
20282660	40.0	1400.0	1.5
20282677	40.0	1450.0	1.5
20282684	40.0	1500.0	1.5
20282691	40.0	1550.0	1.5
20282707	40.0	1600.0	1.5
20282714	40.0	1650.0	1.5
20282721	40.0	1700.0	1.5
20282738	40.0	1750.0	1.5
20282745	40.0	1800.0	1.5
20282752	40.0	1850.0	1.5
20282769	40.0	1900.0	1.5
20282776	40.0	1950.0	1.5
20282783	40.0	2000.0	1.5
20282790	40.0	2050.0	1.5
20282806	40.0	2100.0	1.5
20282813	40.0	2150.0	1.5

Hardened Steel Shafts

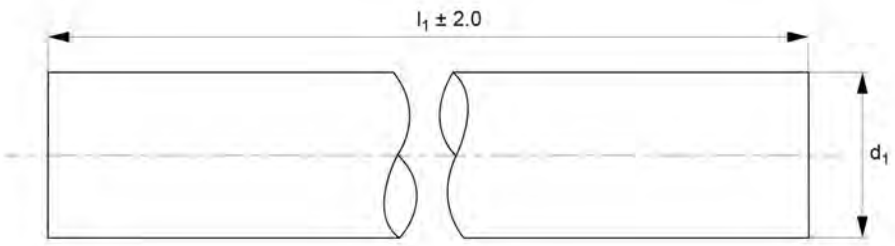



Part Number	d1 tol. h6	l1	Depth of hardness min
20282820	40.0	2200.0	1.5
20282837	40.0	2250.0	1.5
20282844	40.0	2300.0	1.5
20282851	40.0	2350.0	1.5
20282868	40.0	2400.0	1.5
20282875	40.0	2450.0	1.5
20282882	40.0	2500.0	1.5
20282899	40.0	2550.0	1.5
20282905	40.0	2600.0	1.5
20282912	40.0	2650.0	1.5
20282929	40.0	2700.0	1.5
20282936	40.0	2750.0	1.5
20282943	40.0	2800.0	1.5
20282950	40.0	2850.0	1.5
20282967	40.0	2900.0	1.5
20282974	40.0	2950.0	1.5
20282981	40.0	3000.0	1.5
20282998	40.0	3050.0	1.5
20283001	40.0	3100.0	1.5
20283018	40.0	3150.0	1.5
20283025	40.0	3200.0	1.5
20283032	40.0	3250.0	1.5
20283049	40.0	3300.0	1.5
20283056	40.0	3350.0	1.5
20283063	40.0	3400.0	1.5
20283070	40.0	3450.0	1.5
20283087	40.0	3500.0	1.5

Hardened Steel Shafts

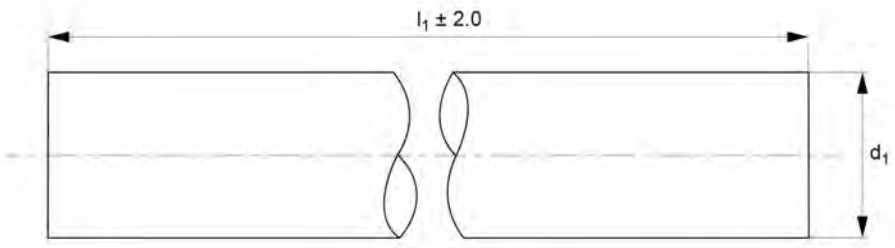



Part Number	d1 tol. h6	l1	Depth of hardness min
20283094	40.0	3550.0	1.5
20283100	40.0	3600.0	1.5
20283117	40.0	3650.0	1.5
20283124	40.0	3700.0	1.5
20283131	40.0	3750.0	1.5
20283148	40.0	3800.0	1.5
20283155	40.0	3850.0	1.5
20283162	40.0	3900.0	1.5
20283179	40.0	3950.0	1.5
20283186	40.0	4000.0	1.5
20283193	40.0	4050.0	1.5
20283209	40.0	4100.0	1.5
20283216	40.0	4150.0	1.5
20283223	40.0	4200.0	1.5
20283230	40.0	4250.0	1.5
20283247	40.0	4300.0	1.5
20283254	40.0	4350.0	1.5
20283261	40.0	4400.0	1.5
20283278	40.0	4450.0	1.5
20283285	40.0	4500.0	1.5
20283292	40.0	4550.0	1.5
20283308	40.0	4600.0	1.5
20283315	40.0	4650.0	1.5
20283322	40.0	4700.0	1.5
20283339	40.0	4750.0	1.5
20283346	40.0	4800.0	1.5
20283353	40.0	4850.0	1.5

Hardened Steel Shafts

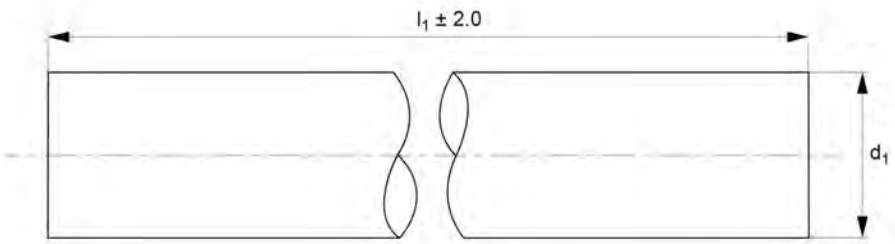



Part Number	d1 tol. h6	l1	Depth of hardness min
20283360	40.0	4900.0	1.5
20283377	40.0	4950.0	1.5
20283384	40.0	5000.0	1.5
20283391	40.0	5050.0	1.5
20283407	40.0	5100.0	1.5
20283414	40.0	5150.0	1.5
20283421	40.0	5200.0	1.5
20283438	40.0	5250.0	1.5
20283445	40.0	5300.0	1.5
20283452	40.0	5350.0	1.5
20283469	40.0	5400.0	1.5
20283476	40.0	5450.0	1.5
20283483	40.0	5500.0	1.5
20283490	40.0	5550.0	1.5
20283506	40.0	5600.0	1.5
20283513	40.0	5650.0	1.5
20283520	40.0	5700.0	1.5
20283537	40.0	5750.0	1.5
20283544	40.0	5800.0	1.5
20283551	40.0	5850.0	1.5
20283568	40.0	5900.0	1.5
20283575	40.0	5950.0	1.5
20283582	40.0	6000.0	1.5
20283599	50.0	100.0	1.5
20283605	50.0	150.0	1.5
20283612	50.0	200.0	1.5
20283629	50.0	250.0	1.5

Hardened Steel Shafts

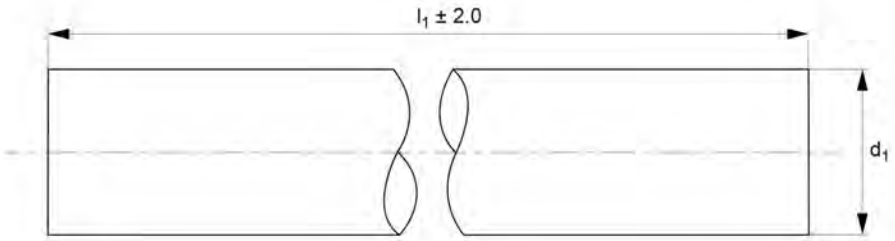



Part Number	d1 tol. h6	l1	Depth of hardness min
20283636	50.0	300.0	1.5
20283643	50.0	350.0	1.5
20283650	50.0	400.0	1.5
20283667	50.0	450.0	1.5
20283674	50.0	500.0	1.5
20283681	50.0	550.0	1.5
20283698	50.0	600.0	1.5
20283704	50.0	650.0	1.5
20283711	50.0	700.0	1.5
20283728	50.0	750.0	1.5
20283735	50.0	800.0	1.5
20283742	50.0	850.0	1.5
20283759	50.0	900.0	1.5
20283766	50.0	1000.0	1.5
20283773	50.0	1050.0	1.5
20283780	50.0	1100.0	1.5
20283797	50.0	1150.0	1.5
20283803	50.0	1200.0	1.5
20283810	50.0	1250.0	1.5
20283827	50.0	1300.0	1.5
20283834	50.0	1350.0	1.5
20283841	50.0	1400.0	1.5
20283858	50.0	1450.0	1.5
20283865	50.0	1500.0	1.5
20283872	50.0	1550.0	1.5
20283889	50.0	1600.0	1.5
20283896	50.0	1650.0	1.5

Hardened Steel Shafts

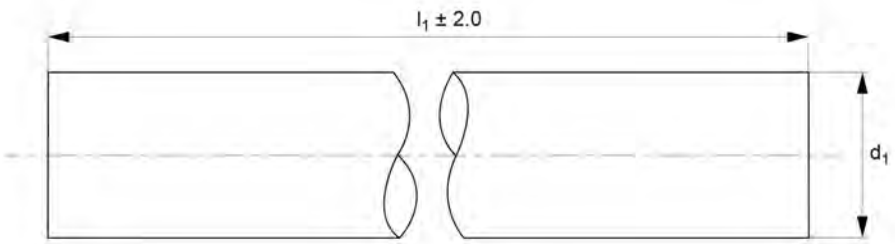



Part Number	d1 tol. h6	l1	Depth of hardness min
20283902	50.0	1700.0	1.5
20283919	50.0	1750.0	1.5
20283926	50.0	1800.0	1.5
20283933	50.0	1850.0	1.5
20283940	50.0	1900.0	1.5
20283957	50.0	1950.0	1.5
20283964	50.0	2000.0	1.5
20283971	50.0	2050.0	1.5
20283988	50.0	2100.0	1.5
20283995	50.0	2150.0	1.5
20284008	50.0	2200.0	1.5
20284015	50.0	2250.0	1.5
20284022	50.0	2300.0	1.5
20284039	50.0	2350.0	1.5
20284046	50.0	2400.0	1.5
20284053	50.0	2450.0	1.5
20284060	50.0	2500.0	1.5
20284077	50.0	2550.0	1.5
20284084	50.0	2600.0	1.5
20284091	50.0	2650.0	1.5
20284107	50.0	2700.0	1.5
20284114	50.0	2750.0	1.5
20284121	50.0	2800.0	1.5
20284138	50.0	2850.0	1.5
20284145	50.0	2900.0	1.5
20284152	50.0	2950.0	1.5
20284169	50.0	3000.0	1.5

Hardened Steel Shafts

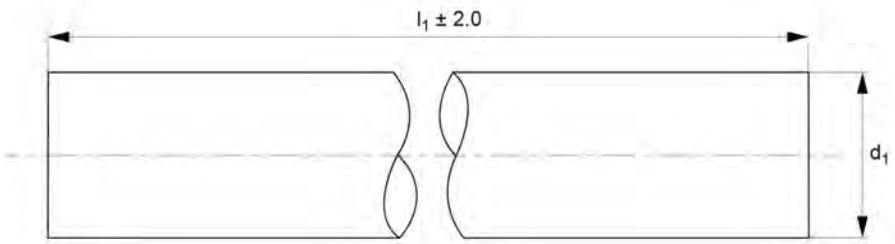



Part Number	d1 tol. h6	l1	Depth of hardness min
20284176	50.0	3050.0	1.5
20284183	50.0	3100.0	1.5
20284190	50.0	3150.0	1.5
20284206	50.0	3200.0	1.5
20284213	50.0	3250.0	1.5
20284220	50.0	3300.0	1.5
20284237	50.0	3350.0	1.5
20284244	50.0	3400.0	1.5
20284251	50.0	3450.0	1.5
20284268	50.0	3500.0	1.5
20284275	50.0	3550.0	1.5
20284282	50.0	3600.0	1.5
20284299	50.0	3650.0	1.5
20284305	50.0	3700.0	1.5
20284312	50.0	3750.0	1.5
20284329	50.0	3800.0	1.5
20284336	50.0	3850.0	1.5
20284343	50.0	3900.0	1.5
20284350	50.0	3950.0	1.5
20284367	50.0	4000.0	1.5
20284374	50.0	4050.0	1.5
20284381	50.0	4100.0	1.5
20284398	50.0	4150.0	1.5
20284404	50.0	4200.0	1.5
20284411	50.0	4250.0	1.5
20284428	50.0	4300.0	1.5
20284435	50.0	4350.0	1.5

Hardened Steel Shafts

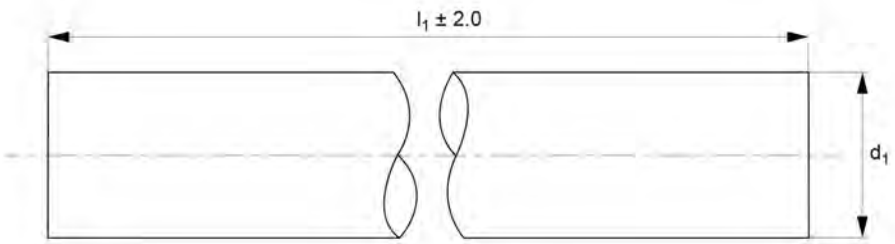



Part Number	d1 tol. h6	l1	Depth of hardness min
20284442	50.0	4400.0	1.5
20284459	50.0	4450.0	1.5
20284466	50.0	4500.0	1.5
20284473	50.0	4550.0	1.5
20284480	50.0	4600.0	1.5
20284497	50.0	4650.0	1.5
20284503	50.0	4700.0	1.5
20284510	50.0	4750.0	1.5
20284527	50.0	4800.0	1.5
20284534	50.0	4850.0	1.5
20284541	50.0	4900.0	1.5
20284558	50.0	4950.0	1.5
20284565	50.0	5000.0	1.5
20284572	50.0	5050.0	1.5
20284589	50.0	5100.0	1.5
20284596	50.0	5150.0	1.5
20284602	50.0	5200.0	1.5
20284619	50.0	5250.0	1.5
20284626	50.0	5300.0	1.5
20284633	50.0	5350.0	1.5
20284640	50.0	5400.0	1.5
20284657	50.0	5450.0	1.5
20284664	50.0	5500.0	1.5
20284671	50.0	5550.0	1.5
20284688	50.0	5600.0	1.5
20284695	50.0	5650.0	1.5
20284701	50.0	5700.0	1.5

Hardened Steel Shafts

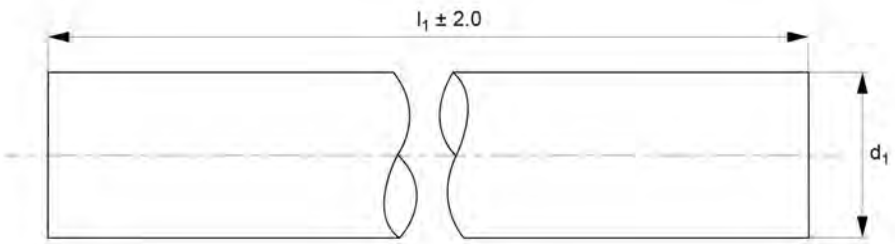



Part Number	d1 tol. h6	l1	Depth of hardness min
20284718	50.0	5750.0	1.5
20284725	50.0	5800.0	1.5
20284732	50.0	5850.0	1.5
20284749	50.0	5900.0	1.5
20284756	50.0	5950.0	1.5
20284763	50.0	6000.0	1.5
20284770	60.0	100.0	1.5
20284787	60.0	150.0	1.5
20284794	60.0	200.0	1.5
20284800	60.0	250.0	1.5
20284817	60.0	300.0	1.5
20284824	60.0	350.0	1.5
20284831	60.0	400.0	1.5
20284848	60.0	450.0	1.5
20284855	60.0	500.0	1.5
20284862	60.0	550.0	1.5
20284879	60.0	600.0	1.5
20284886	60.0	650.0	1.5
20284893	60.0	700.0	1.5
20284909	60.0	750.0	1.5
20284916	60.0	800.0	1.5
20284923	60.0	850.0	1.5
20284930	60.0	900.0	1.5
20284947	60.0	950.0	1.5
20284954	60.0	1000.0	1.5
20284961	60.0	1050.0	1.5
20284978	60.0	1100.0	1.5

Hardened Steel Shafts

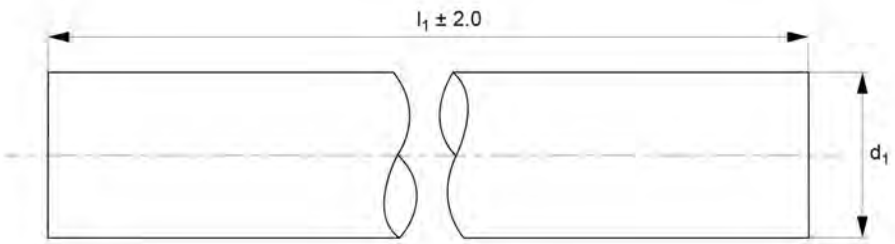



Part Number	d1 tol. h6	l1	Depth of hardness min
20284985	60.0	1150.0	1.5
20284992	60.0	1200.0	1.5
20285005	60.0	1250.0	1.5
20285012	60.0	1300.0	1.5
20285029	60.0	1350.0	1.5
20285036	60.0	1400.0	1.5
20285043	60.0	1450.0	1.5
20285050	60.0	1500.0	1.5
20285067	60.0	1550.0	1.5
20285074	60.0	1600.0	1.5
20285081	60.0	1650.0	1.5
20285098	60.0	1700.0	1.5
20285104	60.0	1750.0	1.5
20285111	60.0	1800.0	1.5
20285128	60.0	1850.0	1.5
20285135	60.0	1900.0	1.5
20285142	60.0	1950.0	1.5
20285159	60.0	2000.0	1.5
20285166	60.0	2050.0	1.5
20285173	60.0	2100.0	1.5
20285180	60.0	2150.0	1.5
20285197	60.0	2200.0	1.5
20285203	60.0	2250.0	1.5
20285210	60.0	2300.0	1.5
20285227	60.0	2350.0	1.5
20285234	60.0	2400.0	1.5
20285241	60.0	2450.0	1.5

Hardened Steel Shafts

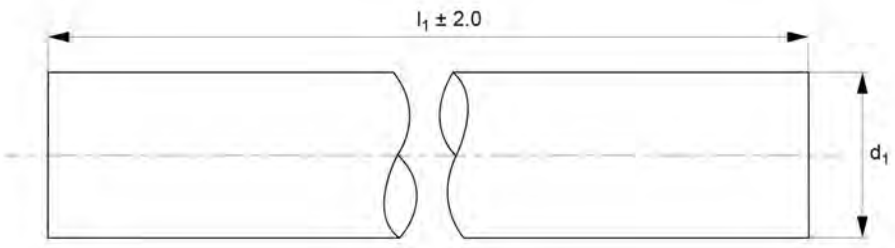



Part Number	d1 tol. h6	l1	Depth of hardness min
20285258	60.0	2500.0	1.5
20285265	60.0	2550.0	1.5
20285272	60.0	2600.0	1.5
20285289	60.0	2650.0	1.5
20285296	60.0	2700.0	1.5
20285302	60.0	2750.0	1.5
20285319	60.0	2800.0	1.5
20285326	60.0	2850.0	1.5
20285333	60.0	2900.0	1.5
20285340	60.0	2950.0	1.5
20285357	60.0	3000.0	1.5
20285364	60.0	3050.0	1.5
20285371	60.0	3100.0	1.5
20285388	60.0	3150.0	1.5
20285395	60.0	3200.0	1.5
20285401	60.0	3250.0	1.5
20285418	60.0	3300.0	1.5
20285425	60.0	3350.0	1.5
20285432	60.0	3400.0	1.5
20285449	60.0	3450.0	1.5
20285456	60.0	3500.0	1.5
20285463	60.0	3550.0	1.5
20285470	60.0	3600.0	1.5
20285487	60.0	3650.0	1.5
20285494	60.0	3700.0	1.5
20285500	60.0	3750.0	1.5
20285517	60.0	3800.0	1.5

Hardened Steel Shafts

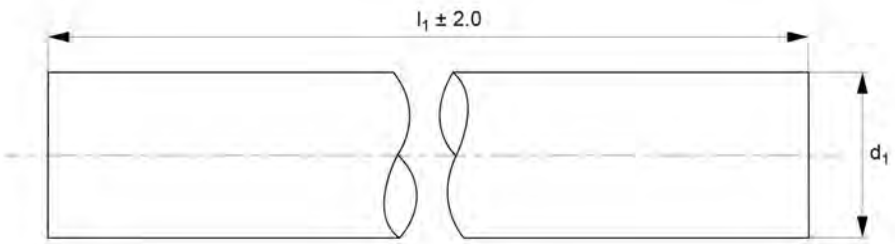



Part Number	d1 tol. h6	l1	Depth of hardness min
20285524	60.0	3850.0	1.5
20285531	60.0	3900.0	1.5
20285548	60.0	3950.0	1.5
20285555	60.0	4000.0	1.5
20285562	60.0	4050.0	1.5
20285579	60.0	4100.0	1.5
20285586	60.0	4150.0	1.5
20285593	60.0	4200.0	1.5
20285609	60.0	4250.0	1.5
20285616	60.0	4300.0	1.5
20285623	60.0	4350.0	1.5
20285630	60.0	4400.0	1.5
20285647	60.0	4450.0	1.5
20285654	60.0	4500.0	1.5
20285661	60.0	4550.0	1.5
20285678	60.0	4600.0	1.5
20285685	60.0	4650.0	1.5
20285692	60.0	4700.0	1.5
20285708	60.0	4750.0	1.5
20285715	60.0	4800.0	1.5
20285722	60.0	4850.0	1.5
20285739	60.0	4900.0	1.5
20285746	60.0	4950.0	1.5
20285753	60.0	5000.0	1.5
20285760	60.0	5050.0	1.5
20285777	60.0	5100.0	1.5
20285784	60.0	5150.0	1.5

Hardened Steel Shafts

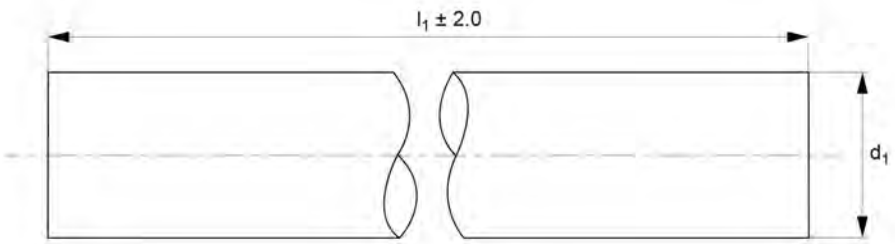



Part Number	d1 tol. h6	l1	Depth of hardness min
20285791	60.0	5200.0	1.5
20285807	60.0	5250.0	1.5
20285814	60.0	5300.0	1.5
20285821	60.0	5350.0	1.5
20285838	60.0	5400.0	1.5
20285845	60.0	5450.0	1.5
20285852	60.0	5500.0	1.5
20285869	60.0	5550.0	1.5
20285876	60.0	5600.0	1.5
20285883	60.0	5650.0	1.5
20285890	60.0	5700.0	1.5
20285906	60.0	5750.0	1.5
20285913	60.0	5800.0	1.5
20285920	60.0	5850.0	1.5
20285937	60.0	5900.0	1.5
20285944	60.0	5950.0	1.5
20285951	60.0	6000.0	1.5

Hardened Hollow Shafts

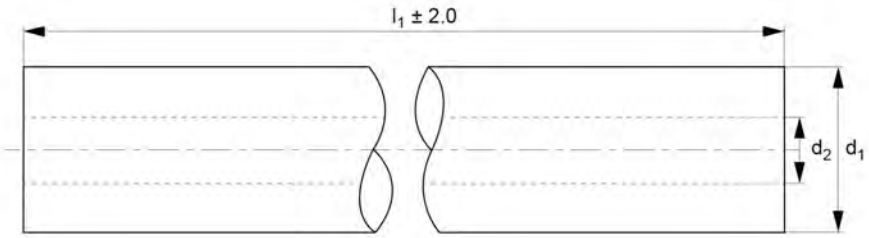



Features

- It is used in applications such as industrial machinery, automotive systems and medical devices.
- Its lighter weight enables greater efficiency, lower energy usage and increased manoeuvrability.
- The design allows fluids, gases or electrical wires to travel through its centre.

Specifications

Material: Steel

Hardened Hollow Shafts are robust and reliable components used in various mechanical applications. They are used with linear bushings when weight reduction is necessary, but the structural integrity is not compromised. This weight decrease enables greater efficiency, lower energy usage, and increased manoeuvrability.

Its design allows fluids, gases, or electrical wires to travel through the centre of it. When paired with a linear ball bushing, it offers smooth and accurate rotational motion.

It is used in applications where high strength and durability are required and where weight reduction is also important, such as industrial machinery, automotive systems, and medical devices.

Hardened Hollow Shafts

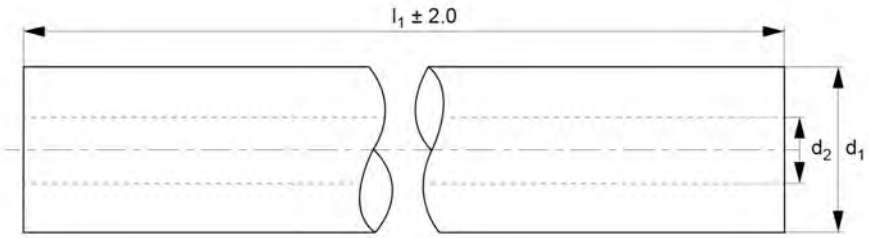



Part Number	d1 tol. h6	l1	d2	Depth of hardness min
20285968	12.0	100.0	4.0	0.4
20285975	12.0	150.0	4.0	0.4
20285982	12.0	200.0	4.0	0.4
20285999	12.0	250.0	4.0	0.4
20286002	12.0	300.0	4.0	0.4
20286019	12.0	350.0	4.0	0.4
20286026	12.0	400.0	4.0	0.4
20286033	12.0	450.0	4.0	0.4
20286040	12.0	500.0	4.0	0.4
20286057	12.0	550.0	4.0	0.4
20286064	12.0	600.0	4.0	0.4
20286071	12.0	700.0	4.0	0.4
20286088	12.0	700.0	4.0	0.4
20286095	12.0	750.0	4.0	0.4
20286101	12.0	800.0	4.0	0.4
20286118	12.0	850.0	4.0	0.4
20286125	12.0	900.0	4.0	0.4
20286132	12.0	950.0	4.0	0.4

Hardened Hollow Shafts

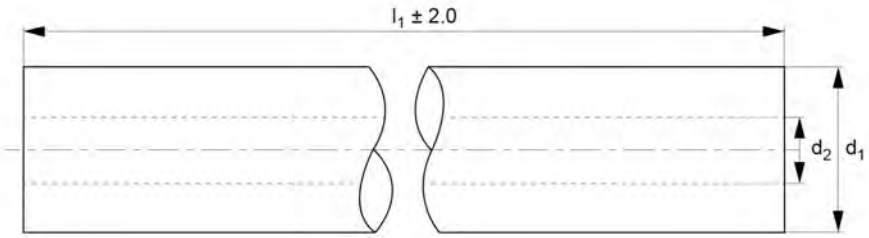



Part Number	d1 tol. h6	l1	d2	Depth of hardness min
20286149	12.0	1000.0	4.0	0.4
20286156	12.0	1050.0	4.0	0.4
20286163	12.0	1100.0	4.0	0.4
20286170	12.0	1150.0	4.0	0.4
20286187	12.0	1200.0	4.0	0.4
20286194	12.0	1250.0	4.0	0.4
20286200	12.0	1300.0	4.0	0.4
20286217	12.0	1350.0	4.0	0.4
20286224	12.0	1400.0	4.0	0.4
20286231	12.0	1450.0	4.0	0.4
20286248	12.0	1500.0	4.0	0.4
20286255	12.0	1550.0	4.0	0.4
20286262	12.0	1600.0	4.0	0.4
20286279	12.0	1650.0	4.0	0.4
20286286	12.0	1700.0	4.0	0.4
20286293	12.0	1750.0	4.0	0.4
20286309	12.0	1800.0	4.0	0.4
20286316	12.0	1850.0	4.0	0.4

Hardened Hollow Shafts

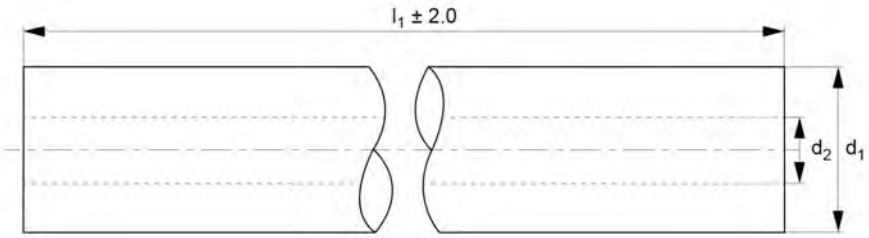



Part Number	d1 tol. h6	l1	d2	Depth of hardness min
20286323	12.0	1900.0	4.0	0.4
20286330	12.0	1950.0	4.0	0.4
20286347	12.0	2000.0	4.0	0.4
20286354	12.0	2050.0	4.0	0.4
20286361	12.0	2100.0	4.0	0.4
20286378	12.0	2150.0	4.0	0.4
20286385	12.0	2200.0	4.0	0.4
20286392	12.0	2250.0	4.0	0.4
20286408	12.0	2300.0	4.0	0.4
20286415	12.0	2350.0	4.0	0.4
20286422	12.0	2400.0	4.0	0.4
20286439	12.0	2450.0	4.0	0.4
20286446	12.0	2500.0	4.0	0.4
20286453	12.0	2550.0	4.0	0.4
20286460	12.0	2600.0	4.0	0.4
20286477	12.0	2650.0	4.0	0.4
20286484	12.0	2700.0	4.0	0.4
20286491	12.0	2750.0	4.0	0.4

Hardened Hollow Shafts

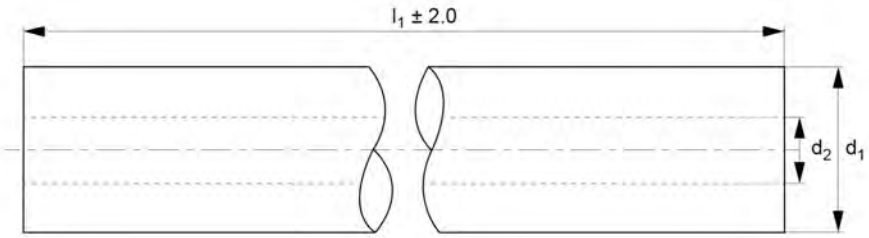



Part Number	d1 tol. h6	l1	d2	Depth of hardness min
20286507	12.0	2800.0	4.0	0.4
20286514	12.0	2850.0	4.0	0.4
20286521	12.0	2900.0	4.0	0.4
20286538	12.0	2950.0	4.0	0.4
20286545	12.0	3000.0	4.0	0.4
20286552	12.0	3050.0	4.0	0.4
20286569	12.0	3100.0	4.0	0.4
20286576	12.0	3150.0	4.0	0.4
20286583	12.0	3200.0	4.0	0.4
20286590	12.0	3250.0	4.0	0.4
20286606	12.0	3300.0	4.0	0.4
20286613	12.0	3350.0	4.0	0.4
20286620	12.0	3400.0	4.0	0.4
20286637	12.0	3450.0	4.0	0.4
20286644	12.0	3500.0	4.0	0.4
20286651	12.0	3550.0	4.0	0.4
20286668	12.0	3600.0	4.0	0.4
20286675	12.0	3650.0	4.0	0.4

Hardened Hollow Shafts

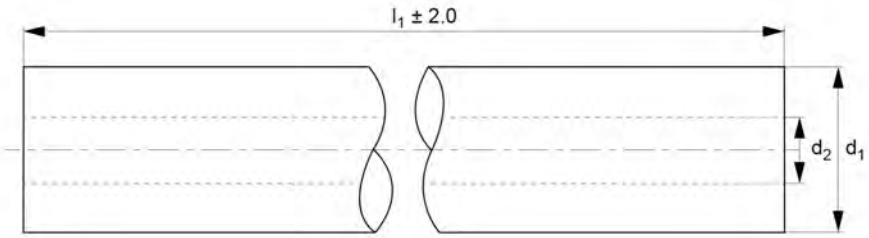



Part Number	d1 tol. h6	l1	d2	Depth of hardness min
20286682	12.0	3700.0	4.0	0.4
20286699	12.0	3750.0	4.0	0.4
20286705	12.0	3800.0	4.0	0.4
20286712	12.0	3850.0	4.0	0.4
20286729	12.0	3900.0	4.0	0.4
20286736	12.0	3950.0	4.0	0.4
20286743	12.0	4000.0	4.0	0.4
20286750	12.0	4050.0	4.0	0.4
20286767	12.0	4100.0	4.0	0.4
20286774	12.0	4150.0	4.0	0.4
20286781	12.0	4200.0	4.0	0.4
20286798	12.0	4250.0	4.0	0.4
20286804	12.0	4300.0	4.0	0.4
20286811	12.0	4350.0	4.0	0.4
20286828	12.0	4400.0	4.0	0.4
20286835	12.0	4450.0	4.0	0.4
20286842	12.0	4500.0	4.0	0.4
20286859	12.0	4550.0	4.0	0.4

Hardened Hollow Shafts

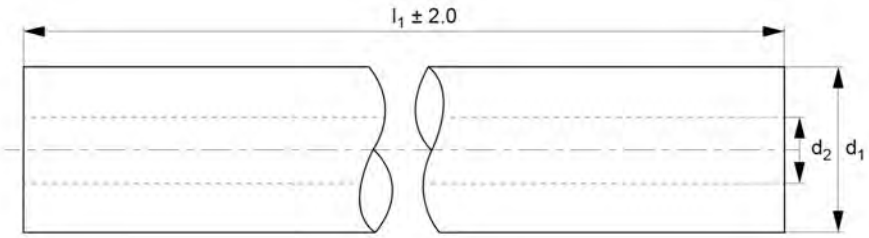



Part Number	d1 tol. h6	l1	d2	Depth of hardness min
20286866	12.0	4600.0	4.0	0.4
20286873	12.0	4650.0	4.0	0.4
20286880	12.0	4700.0	4.0	0.4
20286897	12.0	4750.0	4.0	0.4
20286903	12.0	4800.0	4.0	0.4
20286910	12.0	4850.0	4.0	0.4
20286927	12.0	4900.0	4.0	0.4
20286934	12.0	4950.0	4.0	0.4
20286941	12.0	5000.0	4.0	0.4
20286958	12.0	5050.0	4.0	0.4
20286965	12.0	5100.0	4.0	0.4
20286972	12.0	5150.0	4.0	0.4
20286989	12.0	5200.0	4.0	0.4
20286996	12.0	5250.0	4.0	0.4
20287009	12.0	5300.0	4.0	0.4
20287016	12.0	5350.0	4.0	0.4
20287023	12.0	5400.0	4.0	0.4
20287030	12.0	5450.0	4.0	0.4

Hardened Hollow Shafts

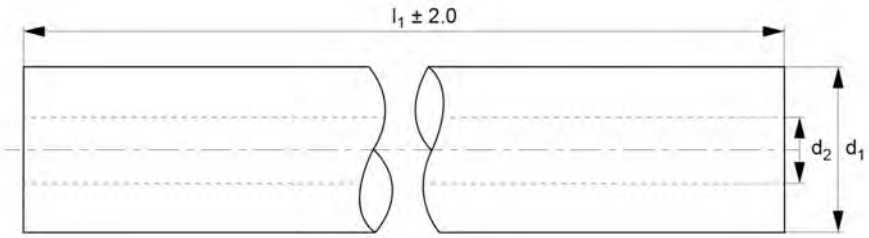



Part Number	d1 tol. h6	l1	d2	Depth of hardness min
20287047	12.0	5500.0	4.0	0.4
20287054	12.0	5550.0	4.0	0.4
20287061	12.0	5600.0	4.0	0.4
20287078	12.0	5650.0	4.0	0.4
20287085	12.0	5700.0	4.0	0.4
20287092	12.0	5750.0	4.0	0.4
20287108	12.0	5800.0	4.0	0.4
20287115	12.0	5850.0	4.0	0.4
20287122	12.0	5900.0	4.0	0.4
20287139	12.0	5950.0	4.0	0.4
20287146	12.0	6000.0	4.0	0.4
20287153	16.0	100.0	7.0	0.4
20287160	16.0	150.0	7.0	0.4
20287177	16.0	200.0	7.0	0.4
20287184	16.0	250.0	7.0	0.4
20287191	16.0	300.0	7.0	0.4
20287207	16.0	350.0	7.0	0.4
20287214	16.0	400.0	7.0	0.4

Hardened Hollow Shafts

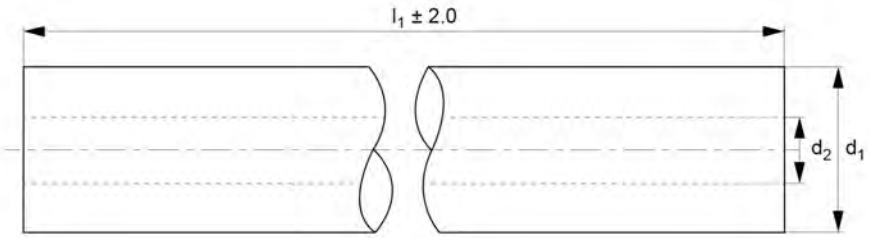



Part Number	d1 tol. h6	l1	d2	Depth of hardness min
20287221	16.0	450.0	7.0	0.4
20287238	16.0	500.0	7.0	0.4
20287245	16.0	550.0	7.0	0.4
20287252	16.0	600.0	7.0	0.4
20287269	16.0	700.0	7.0	0.4
20287276	16.0	700.0	7.0	0.4
20287283	16.0	750.0	7.0	0.4
20287290	16.0	800.0	7.0	0.4
20287306	16.0	850.0	7.0	0.4
20287313	16.0	900.0	7.0	0.4
20287320	16.0	1000.0	7.0	0.4
20287337	16.0	1050.0	7.0	0.4
20287344	16.0	1100.0	7.0	0.4
20287351	16.0	1150.0	7.0	0.4
20287368	16.0	1200.0	7.0	0.4
20287375	16.0	1250.0	7.0	0.4
20287382	16.0	1300.0	7.0	0.4
20287399	16.0	1350.0	7.0	0.4

Hardened Hollow Shafts

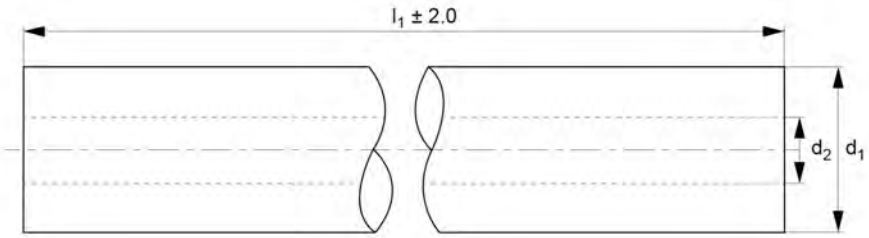



Part Number	d1 tol. h6	l1	d2	Depth of hardness min
20287405	16.0	1400.0	7.0	0.4
20287412	16.0	1450.0	7.0	0.4
20287429	16.0	1500.0	7.0	0.4
20287436	16.0	1550.0	7.0	0.4
20287443	16.0	1600.0	7.0	0.4
20287450	16.0	1650.0	7.0	0.4
20287467	16.0	1700.0	7.0	0.4
20287474	16.0	1750.0	7.0	0.4
20287481	16.0	1800.0	7.0	0.4
20287498	16.0	1850.0	7.0	0.4
20287504	16.0	1900.0	7.0	0.4
20287511	16.0	1950.0	7.0	0.4
20287528	16.0	2000.0	7.0	0.4
20287535	16.0	2050.0	7.0	0.4
20287542	16.0	2100.0	7.0	0.4
20287559	16.0	2150.0	7.0	0.4
20287566	16.0	2200.0	7.0	0.4
20287573	16.0	2250.0	7.0	0.4

Hardened Hollow Shafts

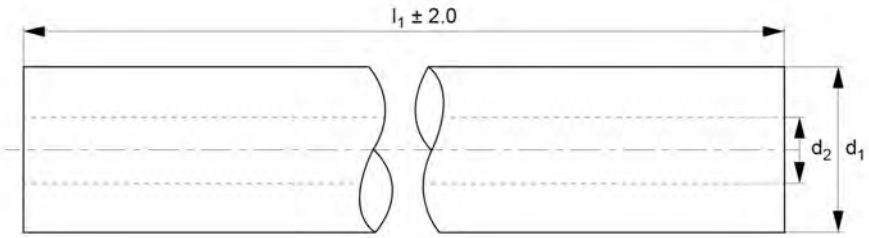



Part Number	d1 tol. h6	l1	d2	Depth of hardness min
20287580	16.0	2300.0	7.0	0.4
20287597	16.0	2350.0	7.0	0.4
20287603	16.0	2400.0	7.0	0.4
20287610	16.0	2450.0	7.0	0.4
20287627	16.0	2500.0	7.0	0.4
20287634	16.0	2550.0	7.0	0.4
20287641	16.0	2600.0	7.0	0.4
20287658	16.0	2650.0	7.0	0.4
20287665	16.0	2700.0	7.0	0.4
20287672	16.0	2750.0	7.0	0.4
20287689	16.0	2800.0	7.0	0.4
20287696	16.0	2850.0	7.0	0.4
20287702	16.0	2900.0	7.0	0.4
20287719	16.0	2950.0	7.0	0.4
20287726	16.0	3000.0	7.0	0.4
20287733	16.0	3050.0	7.0	0.4
20287740	16.0	3100.0	7.0	0.4
20287757	16.0	3150.0	7.0	0.4

Hardened Hollow Shafts

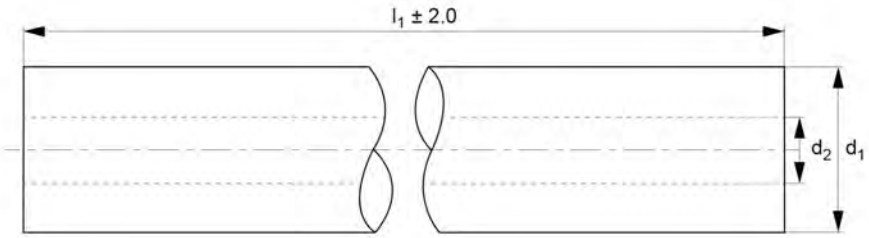



Part Number	d1 tol. h6	l1	d2	Depth of hardness min
20287764	16.0	3200.0	7.0	0.4
20287771	16.0	3250.0	7.0	0.4
20287788	16.0	3300.0	7.0	0.4
20287795	16.0	3350.0	7.0	0.4
20287801	16.0	3400.0	7.0	0.4
20287818	16.0	3450.0	7.0	0.4
20287825	16.0	3500.0	7.0	0.4
20287832	16.0	3550.0	7.0	0.4
20287849	16.0	3600.0	7.0	0.4
20287856	16.0	3650.0	7.0	0.4
20287863	16.0	3700.0	7.0	0.4
20287870	16.0	3750.0	7.0	0.4
20287887	16.0	3800.0	7.0	0.4
20287894	16.0	3850.0	7.0	0.4
20287900	16.0	3900.0	7.0	0.4
20287917	16.0	3950.0	7.0	0.4
20287924	16.0	4000.0	7.0	0.4
20287931	16.0	4050.0	7.0	0.4

Hardened Hollow Shafts

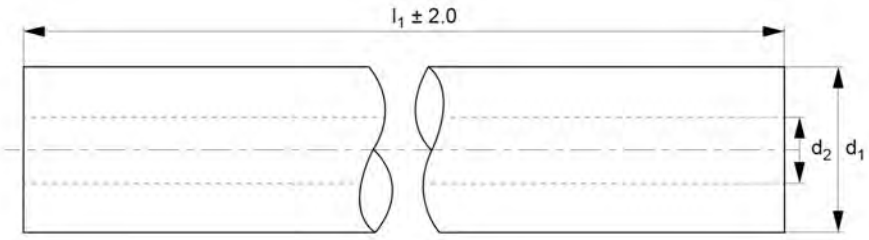



Part Number	d1 tol. h6	l1	d2	Depth of hardness min
20287948	16.0	4100.0	7.0	0.4
20287955	16.0	4150.0	7.0	0.4
20287962	16.0	4200.0	7.0	0.4
20287979	16.0	4250.0	7.0	0.4
20287986	16.0	4300.0	7.0	0.4
20287993	16.0	4350.0	7.0	0.4
20288006	16.0	4400.0	7.0	0.4
20288013	16.0	4450.0	7.0	0.4
20288020	16.0	4500.0	7.0	0.4
20288037	16.0	4550.0	7.0	0.4
20288044	16.0	4600.0	7.0	0.4
20288051	16.0	4650.0	7.0	0.4
20288068	16.0	4700.0	7.0	0.4
20288075	16.0	4750.0	7.0	0.4
20288082	16.0	4800.0	7.0	0.4
20288099	16.0	4850.0	7.0	0.4
20288105	16.0	4900.0	7.0	0.4
20288112	16.0	4950.0	7.0	0.4

Hardened Hollow Shafts

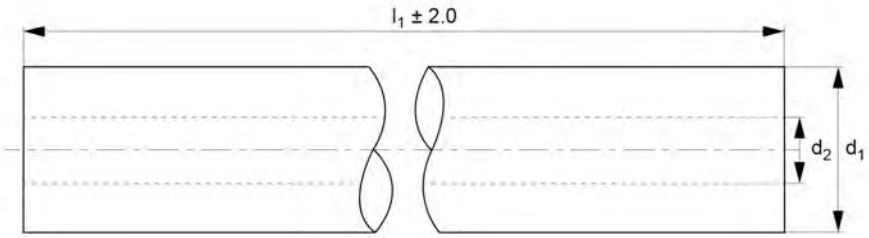



Part Number	d1 tol. h6	l1	d2	Depth of hardness min
20288129	16.0	5000.0	7.0	0.4
20288136	16.0	5050.0	7.0	0.4
20288143	16.0	5100.0	7.0	0.4
20288150	16.0	5150.0	7.0	0.4
20288167	16.0	5200.0	7.0	0.4
20288174	16.0	5250.0	7.0	0.4
20288181	16.0	5300.0	7.0	0.4
20288198	16.0	5350.0	7.0	0.4
20288204	16.0	5400.0	7.0	0.4
20288211	16.0	5450.0	7.0	0.4
20288228	16.0	5500.0	7.0	0.4
20288235	16.0	5550.0	7.0	0.4
20288242	16.0	5600.0	7.0	0.4
20288259	16.0	5650.0	7.0	0.4
20288266	16.0	5700.0	7.0	0.4
20288273	16.0	5750.0	7.0	0.4
20288280	16.0	5800.0	7.0	0.4
20288297	16.0	5850.0	7.0	0.4

Hardened Hollow Shafts

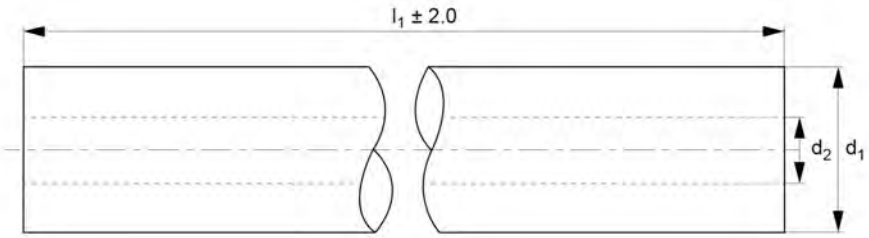



Part Number	d1 tol. h6	l1	d2	Depth of hardness min
20288303	16.0	5900.0	7.0	0.4
20288310	16.0	5950.0	7.0	0.4
20288327	16.0	6000.0	7.0	0.4
20288334	20.0	100.0	14.0	0.4
20288341	20.0	150.0	14.0	0.4
20288358	20.0	200.0	14.0	0.4
20288365	20.0	250.0	14.0	0.4
20288372	20.0	300.0	14.0	0.4
20288389	20.0	350.0	14.0	0.4
20288396	20.0	400.0	14.0	0.4
20288402	20.0	450.0	14.0	0.4
20288419	20.0	500.0	14.0	0.4
20288426	20.0	550.0	14.0	0.4
20288433	20.0	600.0	14.0	0.4
20288440	20.0	700.0	14.0	0.4
20288457	20.0	700.0	14.0	0.4
20288464	20.0	750.0	14.0	0.4
20288471	20.0	800.0	14.0	0.4

Hardened Hollow Shafts

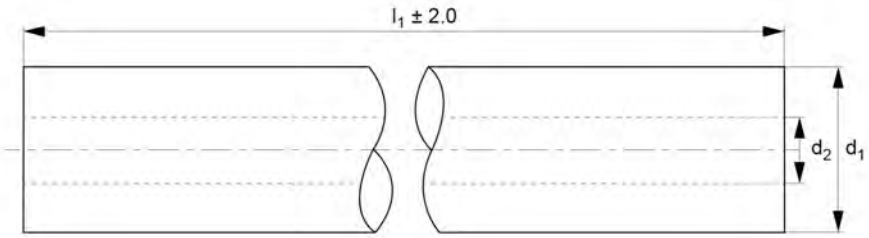



Part Number	d1 tol. h6	l1	d2	Depth of hardness min
20288488	20.0	850.0	14.0	0.4
20288495	20.0	900.0	14.0	0.4
20288501	20.0	950.0	14.0	0.4
20288518	20.0	1000.0	14.0	0.4
20288525	20.0	1050.0	14.0	0.4
20288532	20.0	1100.0	14.0	0.4
20288549	20.0	1150.0	14.0	0.4
20288556	20.0	1200.0	14.0	0.4
20288563	20.0	1250.0	14.0	0.4
20288570	20.0	1300.0	14.0	0.4
20288587	20.0	1350.0	14.0	0.4
20288594	20.0	1400.0	14.0	0.4
20288600	20.0	1450.0	14.0	0.4
20288617	20.0	1500.0	14.0	0.4
20288624	20.0	1550.0	14.0	0.4
20288631	20.0	1600.0	14.0	0.4
20288648	20.0	1650.0	14.0	0.4
20288655	20.0	1700.0	14.0	0.4

Hardened Hollow Shafts

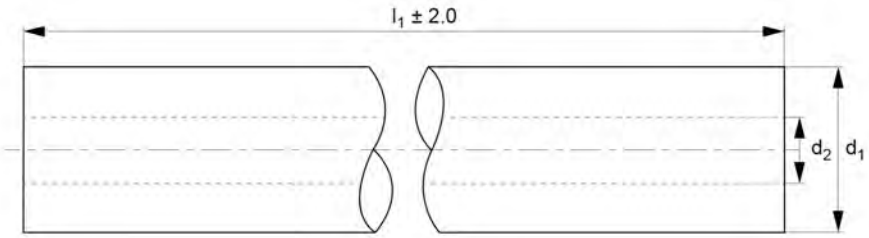



Part Number	d1 tol. h6	l1	d2	Depth of hardness min
20288662	20.0	1750.0	14.0	0.4
20288679	20.0	1800.0	14.0	0.4
20288686	20.0	1850.0	14.0	0.4
20288693	20.0	1900.0	14.0	0.4
20288709	20.0	1950.0	14.0	0.4
20288716	20.0	2000.0	14.0	0.4
20288723	20.0	2050.0	14.0	0.4
20288730	20.0	2100.0	14.0	0.4
20288747	20.0	2150.0	14.0	0.4
20288754	20.0	2200.0	14.0	0.4
20288761	20.0	2250.0	14.0	0.4
20288778	20.0	2300.0	14.0	0.4
20288785	20.0	2350.0	14.0	0.4
20288792	20.0	2400.0	14.0	0.4
20288808	20.0	2450.0	14.0	0.4
20288815	20.0	2500.0	14.0	0.4
20288822	20.0	2550.0	14.0	0.4
20288839	20.0	2600.0	14.0	0.4

Hardened Hollow Shafts

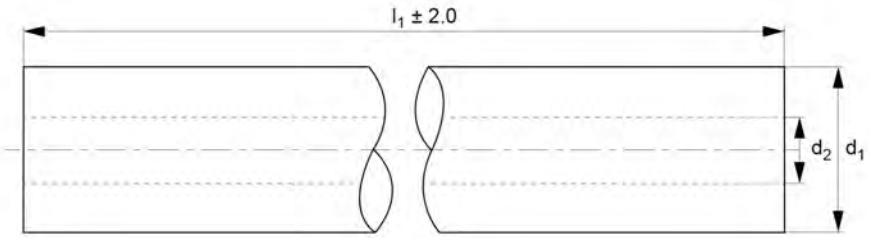



Part Number	d1 tol. h6	l1	d2	Depth of hardness min
20288846	20.0	2650.0	14.0	0.4
20288853	20.0	2700.0	14.0	0.4
20288860	20.0	2750.0	14.0	0.4
20288877	20.0	2800.0	14.0	0.4
20288884	20.0	2850.0	14.0	0.4
20288891	20.0	2900.0	14.0	0.4
20288907	20.0	2950.0	14.0	0.4
20288914	20.0	3000.0	14.0	0.4
20288921	20.0	3050.0	14.0	0.4
20288938	20.0	3100.0	14.0	0.4
20288945	20.0	3150.0	14.0	0.4
20288952	20.0	3200.0	14.0	0.4
20288969	20.0	3250.0	14.0	0.4
20288976	20.0	3300.0	14.0	0.4
20288983	20.0	3350.0	14.0	0.4
20288990	20.0	3400.0	14.0	0.4
20289003	20.0	3450.0	14.0	0.4
20289010	20.0	3500.0	14.0	0.4

Hardened Hollow Shafts

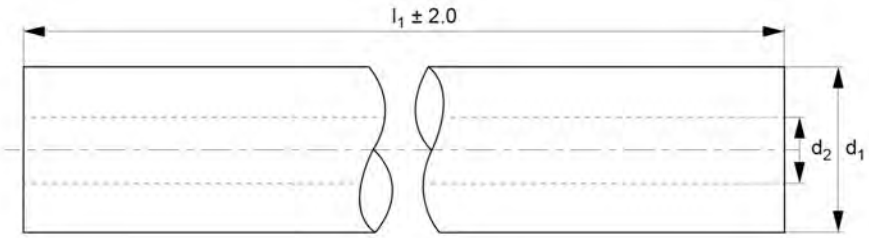



Part Number	d1 tol. h6	l1	d2	Depth of hardness min
20289027	20.0	3550.0	14.0	0.4
20289034	20.0	3600.0	14.0	0.4
20289041	20.0	3650.0	14.0	0.4
20289058	20.0	3700.0	14.0	0.4
20289065	20.0	3750.0	14.0	0.4
20289072	20.0	3800.0	14.0	0.4
20289089	20.0	3850.0	14.0	0.4
20289096	20.0	3900.0	14.0	0.4
20289102	20.0	3950.0	14.0	0.4
20289119	20.0	4000.0	14.0	0.4
20289126	20.0	4050.0	14.0	0.4
20289133	20.0	4100.0	14.0	0.4
20289140	20.0	4150.0	14.0	0.4
20289157	20.0	4200.0	14.0	0.4
20289164	20.0	4250.0	14.0	0.4
20289171	20.0	4300.0	14.0	0.4
20289188	20.0	4350.0	14.0	0.4
20289195	20.0	4400.0	14.0	0.4

Hardened Hollow Shafts

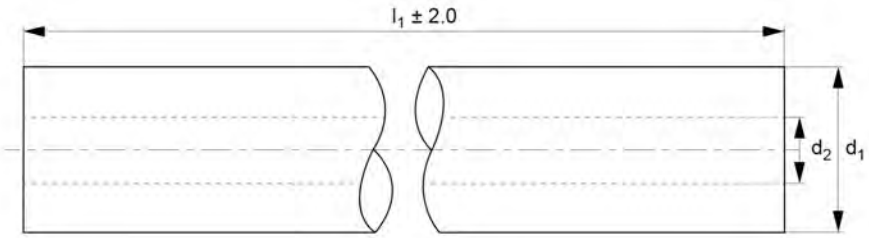



Part Number	d1 tol. h6	l1	d2	Depth of hardness min
20289201	20.0	4450.0	14.0	0.4
20289218	20.0	4500.0	14.0	0.4
20289225	20.0	4550.0	14.0	0.4
20289232	20.0	4600.0	14.0	0.4
20289249	20.0	4650.0	14.0	0.4
20289256	20.0	4700.0	14.0	0.4
20289263	20.0	4750.0	14.0	0.4
20289270	20.0	4800.0	14.0	0.4
20289287	20.0	4850.0	14.0	0.4
20289294	20.0	4900.0	14.0	0.4
20289300	20.0	4950.0	14.0	0.4
20289317	20.0	5000.0	14.0	0.4
20289324	20.0	5050.0	14.0	0.4
20289331	20.0	5100.0	14.0	0.4
20289348	20.0	5150.0	14.0	0.4
20289355	20.0	5200.0	14.0	0.4
20289362	20.0	5250.0	14.0	0.4
20289379	20.0	5300.0	14.0	0.4

Hardened Hollow Shafts

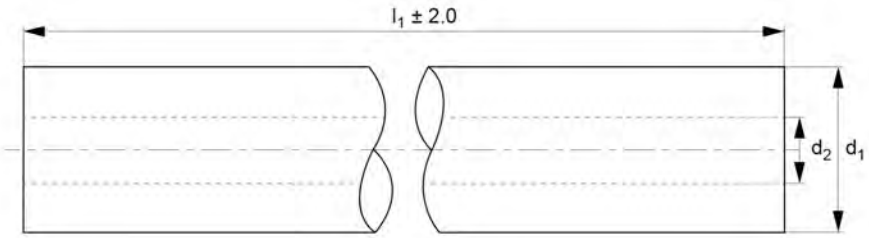



Part Number	d1 tol. h6	l1	d2	Depth of hardness min
20289386	20.0	5350.0	14.0	0.4
20289393	20.0	5400.0	14.0	0.4
20289409	20.0	5450.0	14.0	0.4
20289416	20.0	5500.0	14.0	0.4
20289423	20.0	5550.0	14.0	0.4
20289430	20.0	5600.0	14.0	0.4
20289447	20.0	5650.0	14.0	0.4
20289454	20.0	5700.0	14.0	0.4
20289461	20.0	5750.0	14.0	0.4
20289478	20.0	5800.0	14.0	0.4
20289485	20.0	5850.0	14.0	0.4
20289492	20.0	5900.0	14.0	0.4
20289508	20.0	5950.0	14.0	0.4
20289515	20.0	6000.0	14.0	0.4
20289522	25.0	100.0	15.0	0.4
20289539	25.0	150.0	15.0	0.4
20289546	25.0	200.0	15.0	0.4
20289553	25.0	250.0	15.0	0.4

Hardened Hollow Shafts

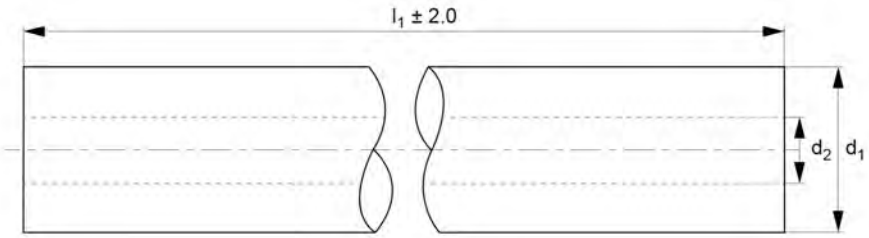



Part Number	d1 tol. h6	l1	d2	Depth of hardness min
20289560	25.0	300.0	15.0	0.4
20289577	25.0	350.0	15.0	0.4
20289584	25.0	400.0	15.0	0.4
20289591	25.0	450.0	15.0	0.4
20289607	25.0	500.0	15.0	0.4
20289614	25.0	550.0	15.0	0.4
20289621	25.0	600.0	15.0	0.4
20289638	25.0	700.0	15.0	0.4
20289645	25.0	700.0	15.0	0.4
20289652	25.0	750.0	15.0	0.4
20289669	25.0	800.0	15.0	0.4
20289676	25.0	850.0	15.0	0.4
20289683	25.0	900.0	15.0	0.4
20289690	25.0	950.0	15.0	0.4
20289706	25.0	1000.0	15.0	0.4
20289713	25.0	1050.0	15.0	0.4
20289720	25.0	1100.0	15.0	0.4
20289737	25.0	1150.0	15.0	0.4

Hardened Hollow Shafts

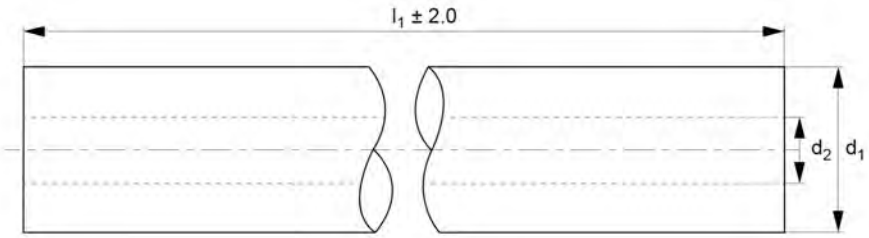



Part Number	d1 tol. h6	l1	d2	Depth of hardness min
20289744	25.0	1200.0	15.0	0.4
20289751	25.0	1250.0	15.0	0.4
20289768	25.0	1300.0	15.0	0.4
20289775	25.0	1350.0	15.0	0.4
20289782	25.0	1400.0	15.0	0.4
20289799	25.0	1450.0	15.0	0.4
20289805	25.0	1500.0	15.0	0.4
20289812	25.0	1550.0	15.0	0.4
20289829	25.0	1600.0	15.0	0.4
20289836	25.0	1650.0	15.0	0.4
20289843	25.0	1700.0	15.0	0.4
20289850	25.0	1750.0	15.0	0.4
20289867	25.0	1800.0	15.0	0.4
20289874	25.0	1850.0	15.0	0.4
20289881	25.0	1900.0	15.0	0.4
20289898	25.0	1950.0	15.0	0.4
20289904	25.0	2000.0	15.0	0.4
20289911	25.0	2050.0	15.0	0.4

Hardened Hollow Shafts

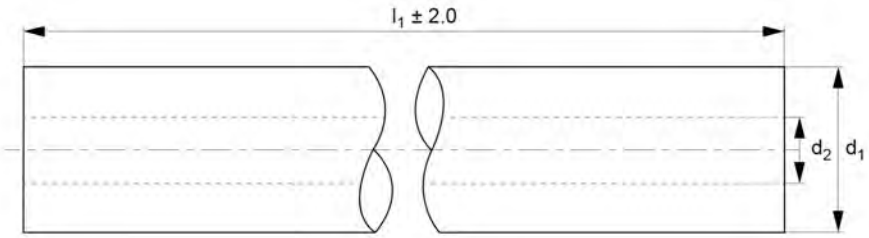



Part Number	d1 tol. h6	l1	d2	Depth of hardness min
20289928	25.0	2100.0	15.0	0.4
20289935	25.0	2150.0	15.0	0.4
20289942	25.0	2200.0	15.0	0.4
20289959	25.0	2250.0	15.0	0.4
20289966	25.0	2300.0	15.0	0.4
20289973	25.0	2350.0	15.0	0.4
20289980	25.0	2400.0	15.0	0.4
20289997	25.0	2450.0	15.0	0.4
20290009	25.0	2500.0	15.0	0.4
20290016	25.0	2550.0	15.0	0.4
20290023	25.0	2600.0	15.0	0.4
20290030	25.0	2650.0	15.0	0.4
20290047	25.0	2700.0	15.0	0.4
20290054	25.0	2750.0	15.0	0.4
20290061	25.0	2800.0	15.0	0.4
20290078	25.0	2850.0	15.0	0.4
20290085	25.0	2900.0	15.0	0.4
20290092	25.0	2950.0	15.0	0.4

Hardened Hollow Shafts

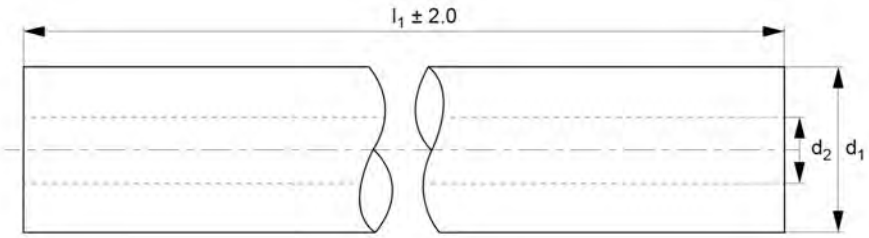



Part Number	d1 tol. h6	l1	d2	Depth of hardness min
20290108	25.0	3000.0	15.0	0.4
20290115	25.0	3050.0	15.0	0.4
20290122	25.0	3100.0	15.0	0.4
20290139	25.0	3150.0	15.0	0.4
20290146	25.0	3200.0	15.0	0.4
20290153	25.0	3250.0	15.0	0.4
20290160	25.0	3300.0	15.0	0.4
20290177	25.0	3350.0	15.0	0.4
20290184	25.0	3400.0	15.0	0.4
20290191	25.0	3450.0	15.0	0.4
20290207	25.0	3500.0	15.0	0.4
20290214	25.0	3550.0	15.0	0.4
20290221	25.0	3600.0	15.0	0.4
20290238	25.0	3650.0	15.0	0.4
20290245	25.0	3700.0	15.0	0.4
20290252	25.0	3750.0	15.0	0.4
20290269	25.0	3800.0	15.0	0.4
20290276	25.0	3850.0	15.0	0.4

Hardened Hollow Shafts

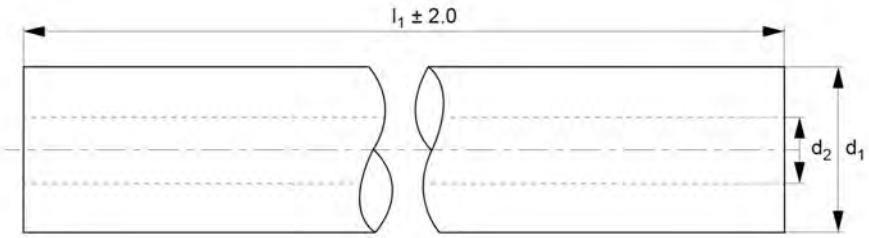



Part Number	d1 tol. h6	l1	d2	Depth of hardness min
20290283	25.0	3900.0	15.0	0.4
20290290	25.0	3950.0	15.0	0.4
20290306	25.0	4000.0	15.0	0.4
20290313	25.0	4050.0	15.0	0.4
20290320	25.0	4100.0	15.0	0.4
20290337	25.0	4150.0	15.0	0.4
20290344	25.0	4200.0	15.0	0.4
20290351	25.0	4250.0	15.0	0.4
20290368	25.0	4300.0	15.0	0.4
20290375	25.0	4350.0	15.0	0.4
20290382	25.0	4400.0	15.0	0.4
20290399	25.0	4450.0	15.0	0.4
20290405	25.0	4500.0	15.0	0.4
20290412	25.0	4550.0	15.0	0.4
20290429	25.0	4600.0	15.0	0.4
20290436	25.0	4650.0	15.0	0.4
20290443	25.0	4700.0	15.0	0.4
20290450	25.0	4750.0	15.0	0.4

Hardened Hollow Shafts

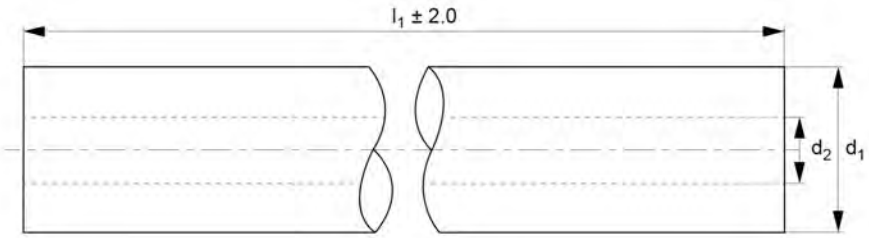



Part Number	d1 tol. h6	l1	d2	Depth of hardness min
20290467	25.0	4800.0	15.0	0.4
20290474	25.0	4850.0	15.0	0.4
20290481	25.0	4900.0	15.0	0.4
20290498	25.0	4950.0	15.0	0.4
20290504	25.0	5000.0	15.0	0.4
20290511	25.0	5050.0	15.0	0.4
20290528	25.0	5100.0	15.0	0.4
20290535	25.0	5150.0	15.0	0.4
20290542	25.0	5200.0	15.0	0.4
20290559	25.0	5250.0	15.0	0.4
20290566	25.0	5300.0	15.0	0.4
20290573	25.0	5350.0	15.0	0.4
20290580	25.0	5400.0	15.0	0.4
20290597	25.0	5450.0	15.0	0.4
20290603	25.0	5500.0	15.0	0.4
20290610	25.0	5550.0	15.0	0.4
20290627	25.0	5600.0	15.0	0.4
20290634	25.0	5650.0	15.0	0.4

Hardened Hollow Shafts

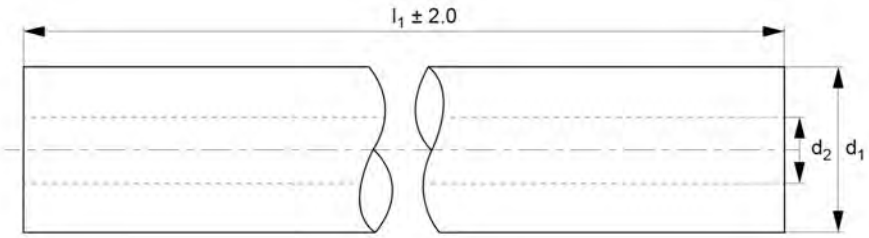



Part Number	d1 tol. h6	l1	d2	Depth of hardness min
20290641	25.0	5700.0	15.0	0.4
20290658	25.0	5750.0	15.0	0.4
20290665	25.0	5800.0	15.0	0.4
20290672	25.0	5850.0	15.0	0.4
20290689	25.0	5900.0	15.0	0.4
20290696	25.0	5950.0	15.0	0.4
20290702	25.0	6000.0	15.0	0.4
20290719	30.0	100.0	18.0	0.6
20290726	30.0	150.0	18.0	0.6
20290733	30.0	200.0	18.0	0.6
20290740	30.0	250.0	18.0	0.6
20290757	30.0	300.0	18.0	0.6
20290764	30.0	350.0	18.0	0.6
20290771	30.0	400.0	18.0	0.6
20290788	30.0	450.0	18.0	0.6
20290795	30.0	500.0	18.0	0.6
20290801	30.0	550.0	18.0	0.6
20290818	30.0	600.0	18.0	0.6

Hardened Hollow Shafts

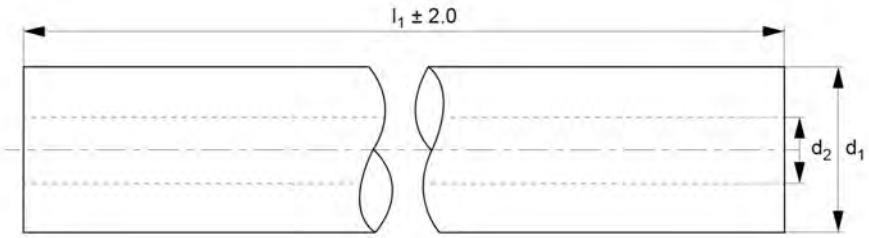



Part Number	d1 tol. h6	l1	d2	Depth of hardness min
20290825	30.0	700.0	18.0	0.6
20290832	30.0	700.0	18.0	0.6
20290849	30.0	750.0	18.0	0.6
20290856	30.0	800.0	18.0	0.6
20290863	30.0	850.0	18.0	0.6
20290870	30.0	900.0	18.0	0.6
20290887	30.0	950.0	18.0	0.6
20290894	30.0	1000.0	18.0	0.6
20290900	30.0	1050.0	18.0	0.6
20290917	30.0	1100.0	18.0	0.6
20290924	30.0	1150.0	18.0	0.6
20290931	30.0	1200.0	18.0	0.6
20290948	30.0	1250.0	18.0	0.6
20290955	30.0	1300.0	18.0	0.6
20290962	30.0	1350.0	18.0	0.6
20290979	30.0	1400.0	18.0	0.6
20290986	30.0	1450.0	18.0	0.6
20290993	30.0	1500.0	18.0	0.6

Hardened Hollow Shafts

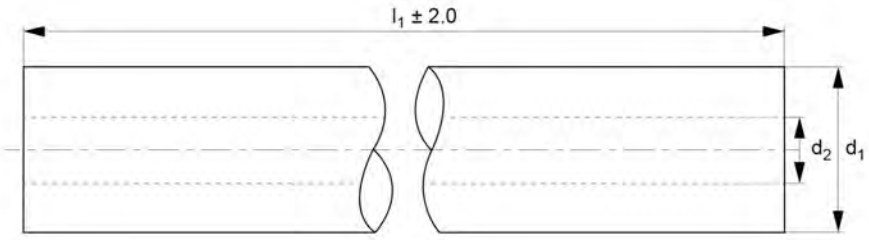



Part Number	d1 tol. h6	l1	d2	Depth of hardness min
20291006	30.0	1550.0	18.0	0.6
20291013	30.0	1600.0	18.0	0.6
20291020	30.0	1650.0	18.0	0.6
20291037	30.0	1700.0	18.0	0.6
20291044	30.0	1750.0	18.0	0.6
20291051	30.0	1800.0	18.0	0.6
20291068	30.0	1850.0	18.0	0.6
20291075	30.0	1900.0	18.0	0.6
20291082	30.0	1950.0	18.0	0.6
20291099	30.0	2000.0	18.0	0.6
20291105	30.0	2050.0	18.0	0.6
20291112	30.0	2100.0	18.0	0.6
20291129	30.0	2150.0	18.0	0.6
20291136	30.0	2200.0	18.0	0.6
20291143	30.0	2250.0	18.0	0.6
20291150	30.0	2300.0	18.0	0.6
20291167	30.0	2350.0	18.0	0.6
20291174	30.0	2400.0	18.0	0.6

Hardened Hollow Shafts

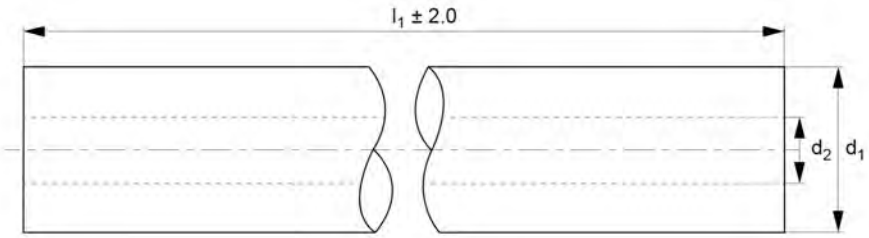



Part Number	d1 tol. h6	l1	d2	Depth of hardness min
20291181	30.0	2450.0	18.0	0.6
20291198	30.0	2500.0	18.0	0.6
20291204	30.0	2550.0	18.0	0.6
20291211	30.0	2600.0	18.0	0.6
20291228	30.0	2650.0	18.0	0.6
20291235	30.0	2700.0	18.0	0.6
20291242	30.0	2750.0	18.0	0.6
20291259	30.0	2800.0	18.0	0.6
20291266	30.0	2850.0	18.0	0.6
20291273	30.0	2900.0	18.0	0.6
20291280	30.0	2950.0	18.0	0.6
20291297	30.0	3000.0	18.0	0.6
20291303	30.0	3050.0	18.0	0.6
20291310	30.0	3100.0	18.0	0.6
20291327	30.0	3150.0	18.0	0.6
20291334	30.0	3200.0	18.0	0.6
20291341	30.0	3250.0	18.0	0.6
20291358	30.0	3300.0	18.0	0.6

Hardened Hollow Shafts

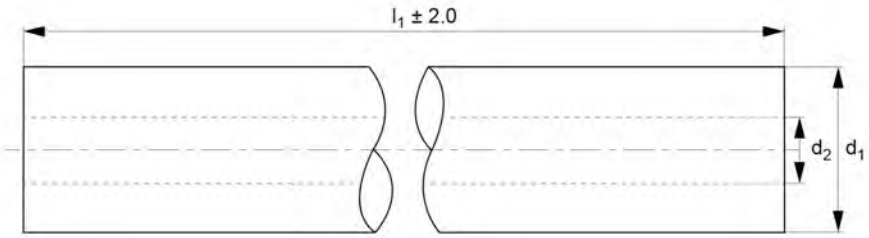



Part Number	d1 tol. h6	l1	d2	Depth of hardness min
20291365	30.0	3350.0	18.0	0.6
20291372	30.0	3400.0	18.0	0.6
20291389	30.0	3450.0	18.0	0.6
20291396	30.0	3500.0	18.0	0.6
20291402	30.0	3550.0	18.0	0.6
20291419	30.0	3600.0	18.0	0.6
20291426	30.0	3650.0	18.0	0.6
20291433	30.0	3700.0	18.0	0.6
20291440	30.0	3750.0	18.0	0.6
20291457	30.0	3800.0	18.0	0.6
20291464	30.0	3850.0	18.0	0.6
20291471	30.0	3900.0	18.0	0.6
20291488	30.0	3950.0	18.0	0.6
20291495	30.0	4000.0	18.0	0.6
20291501	30.0	4050.0	18.0	0.6
20291518	30.0	4100.0	18.0	0.6
20291525	30.0	4150.0	18.0	0.6
20291532	30.0	4200.0	18.0	0.6

Hardened Hollow Shafts

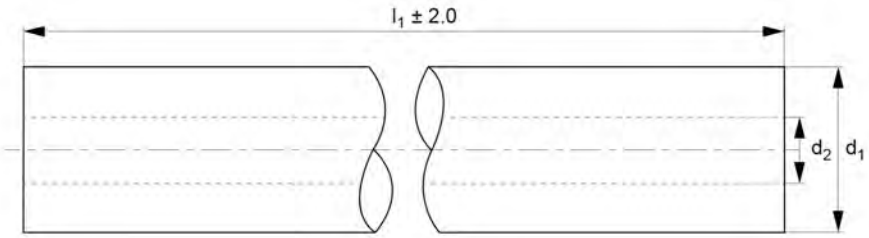



Part Number	d1 tol. h6	l1	d2	Depth of hardness min
20291549	30.0	4250.0	18.0	0.6
20291556	30.0	4300.0	18.0	0.6
20291563	30.0	4350.0	18.0	0.6
20291570	30.0	4400.0	18.0	0.6
20291587	30.0	4450.0	18.0	0.6
20291594	30.0	4500.0	18.0	0.6
20291600	30.0	4550.0	18.0	0.6
20291617	30.0	4600.0	18.0	0.6
20291624	30.0	4650.0	18.0	0.6
20291631	30.0	4700.0	18.0	0.6
20291648	30.0	4750.0	18.0	0.6
20291655	30.0	4800.0	18.0	0.6
20291662	30.0	4850.0	18.0	0.6
20291679	30.0	4900.0	18.0	0.6
20291686	30.0	4950.0	18.0	0.6
20291693	30.0	5000.0	18.0	0.6
20291709	30.0	5050.0	18.0	0.6
20291716	30.0	5100.0	18.0	0.6

Hardened Hollow Shafts

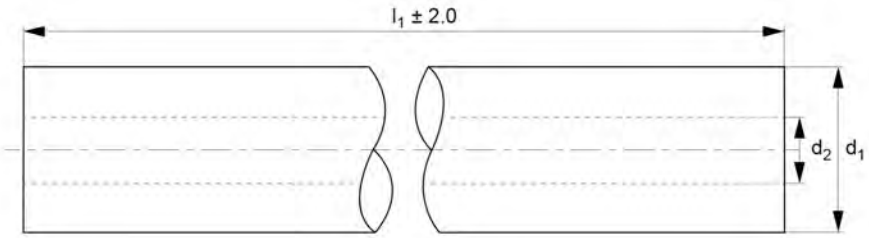



Part Number	d1 tol. h6	l1	d2	Depth of hardness min
20291723	30.0	5150.0	18.0	0.6
20291730	30.0	5200.0	18.0	0.6
20291747	30.0	5250.0	18.0	0.6
20291754	30.0	5300.0	18.0	0.6
20291761	30.0	5350.0	18.0	0.6
20291778	30.0	5400.0	18.0	0.6
20291785	30.0	5450.0	18.0	0.6
20291792	30.0	5500.0	18.0	0.6
20291808	30.0	5550.0	18.0	0.6
20291815	30.0	5600.0	18.0	0.6
20291822	30.0	5650.0	18.0	0.6
20291839	30.0	5700.0	18.0	0.6
20291846	30.0	5750.0	18.0	0.6
20291853	30.0	5800.0	18.0	0.6
20291860	30.0	5850.0	18.0	0.6
20291877	30.0	5900.0	18.0	0.6
20291884	30.0	5950.0	18.0	0.6
20291891	30.0	6000.0	18.0	0.6

Hardened Hollow Shafts

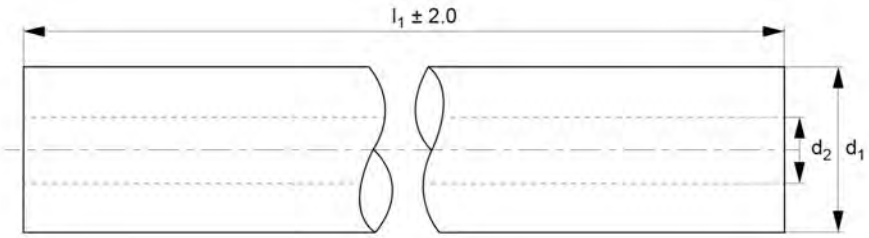



Part Number	d1 tol. h6	l1	d2	Depth of hardness min
20291907	40.0	100.0	28.0	0.6
20291914	40.0	150.0	28.0	0.6
20291921	40.0	200.0	28.0	0.6
20291938	40.0	250.0	28.0	0.6
20291945	40.0	300.0	28.0	0.6
20291952	40.0	350.0	28.0	0.6
20291969	40.0	400.0	28.0	0.6
20291976	40.0	450.0	28.0	0.6
20291983	40.0	500.0	28.0	0.6
20291990	40.0	550.0	28.0	0.6
20292003	40.0	600.0	28.0	0.6
20292010	40.0	700.0	28.0	0.6
20292027	40.0	700.0	28.0	0.6
20292034	40.0	750.0	28.0	0.6
20292041	40.0	800.0	28.0	0.6
20292058	40.0	850.0	28.0	0.6
20292065	40.0	900.0	28.0	0.6
20292072	40.0	950.0	28.0	0.6

Hardened Hollow Shafts

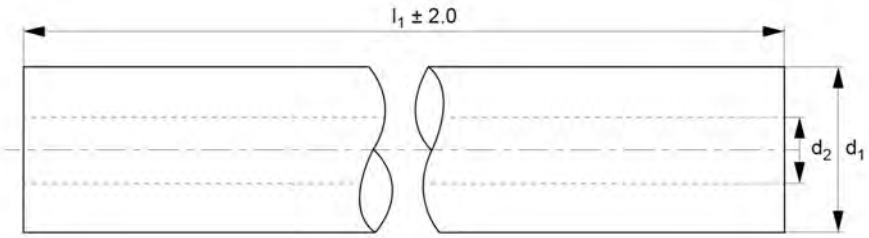



Part Number	d1 tol. h6	l1	d2	Depth of hardness min
20292089	40.0	1000.0	28.0	0.6
20292096	40.0	1050.0	28.0	0.6
20292102	40.0	1100.0	28.0	0.6
20292119	40.0	1150.0	28.0	0.6
20292126	40.0	1200.0	28.0	0.6
20292133	40.0	1250.0	28.0	0.6
20292140	40.0	1300.0	28.0	0.6
20292157	40.0	1350.0	28.0	0.6
20292164	40.0	1400.0	28.0	0.6
20292171	40.0	1450.0	28.0	0.6
20292188	40.0	1500.0	28.0	0.6
20292195	40.0	1550.0	28.0	0.6
20292201	40.0	1600.0	28.0	0.6
20292218	40.0	1650.0	28.0	0.6
20292225	40.0	1700.0	28.0	0.6
20292232	40.0	1750.0	28.0	0.6
20292249	40.0	1800.0	28.0	0.6
20292256	40.0	1850.0	28.0	0.6

Hardened Hollow Shafts

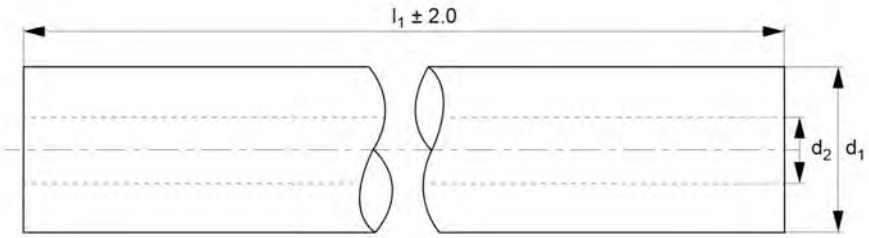



Part Number	d1 tol. h6	l1	d2	Depth of hardness min
20292263	40.0	1900.0	28.0	0.6
20292270	40.0	1950.0	28.0	0.6
20292287	40.0	2000.0	28.0	0.6
20292294	40.0	2050.0	28.0	0.6
20292300	40.0	2100.0	28.0	0.6
20292317	40.0	2150.0	28.0	0.6
20292324	40.0	2200.0	28.0	0.6
20292331	40.0	2250.0	28.0	0.6
20292348	40.0	2300.0	28.0	0.6
20292355	40.0	2350.0	28.0	0.6
20292362	40.0	2400.0	28.0	0.6
20292379	40.0	2450.0	28.0	0.6
20292386	40.0	2500.0	28.0	0.6
20292393	40.0	2550.0	28.0	0.6
20292409	40.0	2600.0	28.0	0.6
20292416	40.0	2650.0	28.0	0.6
20292423	40.0	2700.0	28.0	0.6
20292430	40.0	2750.0	28.0	0.6

Hardened Hollow Shafts

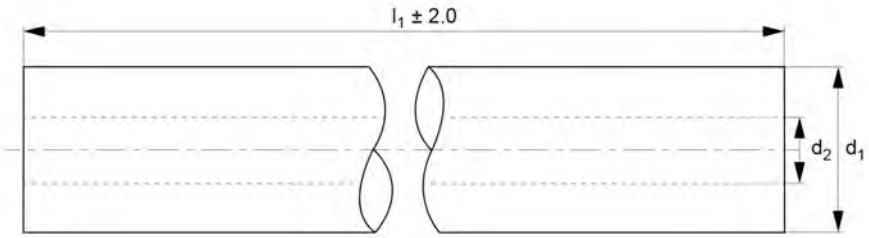



Part Number	d1 tol. h6	l1	d2	Depth of hardness min
20292447	40.0	2800.0	28.0	0.6
20292454	40.0	2850.0	28.0	0.6
20292461	40.0	2900.0	28.0	0.6
20292478	40.0	2950.0	28.0	0.6
20292485	40.0	3000.0	28.0	0.6
20292492	40.0	3050.0	28.0	0.6
20292508	40.0	3100.0	28.0	0.6
20292515	40.0	3150.0	28.0	0.6
20292522	40.0	3200.0	28.0	0.6
20292539	40.0	3250.0	28.0	0.6
20292546	40.0	3300.0	28.0	0.6
20292553	40.0	3350.0	28.0	0.6
20292560	40.0	3400.0	28.0	0.6
20292577	40.0	3450.0	28.0	0.6
20292584	40.0	3500.0	28.0	0.6
20292591	40.0	3550.0	28.0	0.6
20292607	40.0	3600.0	28.0	0.6
20292614	40.0	3650.0	28.0	0.6

Hardened Hollow Shafts

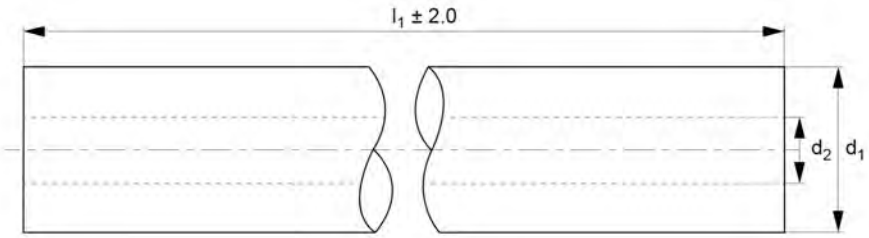



Part Number	d1 tol. h6	l1	d2	Depth of hardness min
20292621	40.0	3700.0	28.0	0.6
20292638	40.0	3750.0	28.0	0.6
20292645	40.0	3800.0	28.0	0.6
20292652	40.0	3850.0	28.0	0.6
20292669	40.0	3900.0	28.0	0.6
20292676	40.0	3950.0	28.0	0.6
20292683	40.0	4000.0	28.0	0.6
20292690	40.0	4050.0	28.0	0.6
20292706	40.0	4100.0	28.0	0.6
20292713	40.0	4150.0	28.0	0.6
20292720	40.0	4200.0	28.0	0.6
20292737	40.0	4250.0	28.0	0.6
20292744	40.0	4300.0	28.0	0.6
20292751	40.0	4350.0	28.0	0.6
20292768	40.0	4400.0	28.0	0.6
20292775	40.0	4450.0	28.0	0.6
20292782	40.0	4500.0	28.0	0.6
20292799	40.0	4550.0	28.0	0.6

Hardened Hollow Shafts

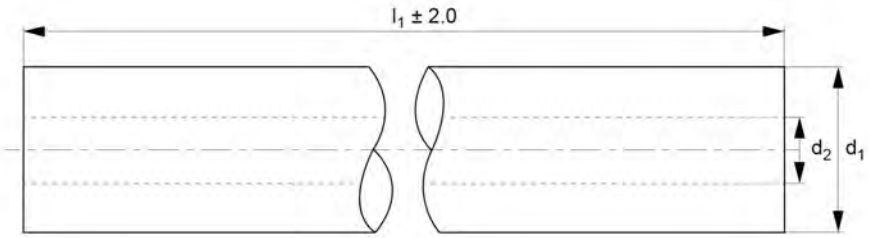



Part Number	d1 tol. h6	l1	d2	Depth of hardness min
20292805	40.0	4600.0	28.0	0.6
20292812	40.0	4650.0	28.0	0.6
20292829	40.0	4700.0	28.0	0.6
20292836	40.0	4750.0	28.0	0.6
20292843	40.0	4800.0	28.0	0.6
20292850	40.0	4850.0	28.0	0.6
20292867	40.0	4900.0	28.0	0.6
20292874	40.0	4950.0	28.0	0.6
20292881	40.0	5000.0	28.0	0.6
20292898	40.0	5050.0	28.0	0.6
20292904	40.0	5100.0	28.0	0.6
20292911	40.0	5150.0	28.0	0.6
20292928	40.0	5200.0	28.0	0.6
20292935	40.0	5250.0	28.0	0.6
20292942	40.0	5300.0	28.0	0.6
20292959	40.0	5350.0	28.0	0.6
20292966	40.0	5400.0	28.0	0.6
20292973	40.0	5450.0	28.0	0.6

Hardened Hollow Shafts

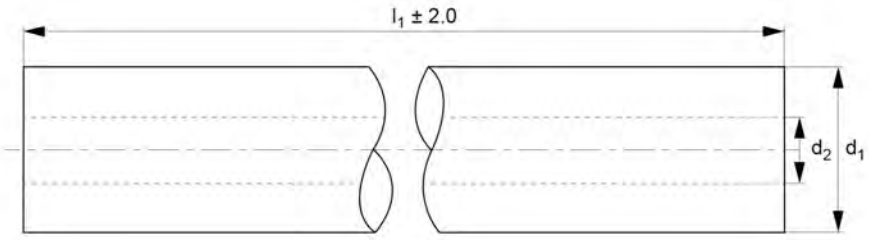



Part Number	d1 tol. h6	l1	d2	Depth of hardness min
20292980	40.0	5500.0	28.0	0.6
20292997	40.0	5550.0	28.0	0.6
20293000	40.0	5600.0	28.0	0.6
20293017	40.0	5650.0	28.0	0.6
20293024	40.0	5700.0	28.0	0.6
20293031	40.0	5750.0	28.0	0.6
20293048	40.0	5800.0	28.0	0.6
20293055	40.0	5850.0	28.0	0.6
20293062	40.0	5900.0	28.0	0.6
20293079	40.0	5950.0	28.0	0.6
20293086	40.0	6000.0	28.0	0.6
20293093	50.0	100.0	28.0	0.6
20293109	50.0	150.0	28.0	0.6
20293116	50.0	200.0	28.0	0.6
20293123	50.0	250.0	28.0	0.6
20293130	50.0	300.0	28.0	0.6
20293147	50.0	350.0	28.0	0.6
20293154	50.0	400.0	28.0	0.6

Hardened Hollow Shafts

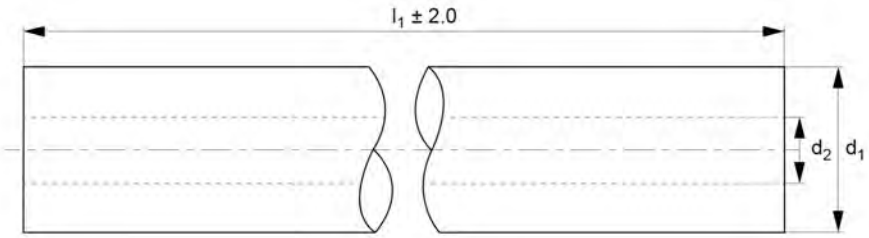



Part Number	d1 tol. h6	l1	d2	Depth of hardness min
20293161	50.0	450.0	28.0	0.6
20293178	50.0	500.0	28.0	0.6
20293185	50.0	550.0	28.0	0.6
20293192	50.0	600.0	28.0	0.6
20293208	50.0	700.0	28.0	0.6
20293215	50.0	700.0	28.0	0.6
20293222	50.0	750.0	28.0	0.6
20293239	50.0	800.0	28.0	0.6
20293246	50.0	850.0	28.0	0.6
20293253	50.0	900.0	28.0	0.6
20293260	50.0	950.0	28.0	0.6
20293277	50.0	1000.0	28.0	0.6
20293284	50.0	1050.0	28.0	0.6
20293291	50.0	1100.0	28.0	0.6
20293307	50.0	1150.0	28.0	0.6
20293314	50.0	1200.0	28.0	0.6
20293321	50.0	1250.0	28.0	0.6
20293338	50.0	1300.0	28.0	0.6

Hardened Hollow Shafts

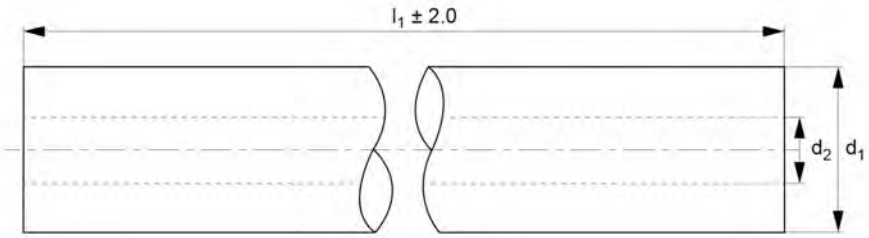



Part Number	d1 tol. h6	l1	d2	Depth of hardness min
20293345	50.0	1350.0	28.0	0.6
20293352	50.0	1400.0	28.0	0.6
20293369	50.0	1450.0	28.0	0.6
20293376	50.0	1500.0	28.0	0.6
20293383	50.0	1550.0	28.0	0.6
20293390	50.0	1600.0	28.0	0.6
20293406	50.0	1650.0	28.0	0.6
20293413	50.0	1700.0	28.0	0.6
20293420	50.0	1750.0	28.0	0.6
20293437	50.0	1800.0	28.0	0.6
20293444	50.0	1850.0	28.0	0.6
20293451	50.0	1900.0	28.0	0.6
20293468	50.0	1950.0	28.0	0.6
20293475	50.0	2000.0	28.0	0.6
20293482	50.0	2050.0	28.0	0.6
20293499	50.0	2100.0	28.0	0.6
20293505	50.0	2150.0	28.0	0.6
20293512	50.0	2200.0	28.0	0.6

Hardened Hollow Shafts

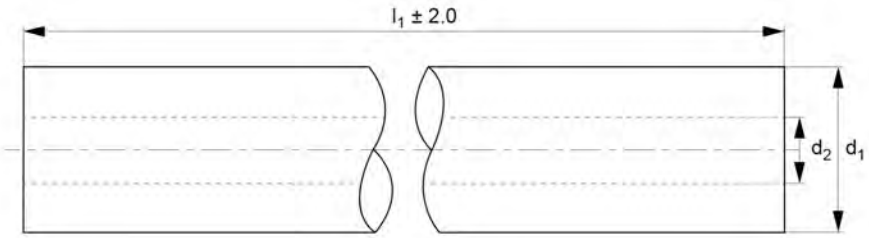



Part Number	d1 tol. h6	l1	d2	Depth of hardness min
20293529	50.0	2250.0	28.0	0.6
20293536	50.0	2300.0	28.0	0.6
20293543	50.0	2350.0	28.0	0.6
20293550	50.0	2400.0	28.0	0.6
20293567	50.0	2450.0	28.0	0.6
20293574	50.0	2500.0	28.0	0.6
20293581	50.0	2550.0	28.0	0.6
20293598	50.0	2600.0	28.0	0.6
20293604	50.0	2650.0	28.0	0.6
20293611	50.0	2700.0	28.0	0.6
20293628	50.0	2750.0	28.0	0.6
20293635	50.0	2800.0	28.0	0.6
20293642	50.0	2850.0	28.0	0.6
20293659	50.0	2900.0	28.0	0.6
20293666	50.0	2950.0	28.0	0.6
20293673	50.0	3000.0	28.0	0.6
20293680	50.0	3050.0	28.0	0.6
20293697	50.0	3100.0	28.0	0.6

Hardened Hollow Shafts

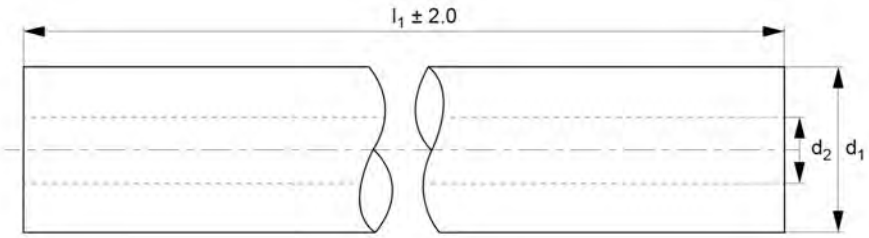



Part Number	d1 tol. h6	l1	d2	Depth of hardness min
20293703	50.0	3150.0	28.0	0.6
20293710	50.0	3200.0	28.0	0.6
20293727	50.0	3250.0	28.0	0.6
20293734	50.0	3300.0	28.0	0.6
20293741	50.0	3350.0	28.0	0.6
20293758	50.0	3400.0	28.0	0.6
20293765	50.0	3450.0	28.0	0.6
20293772	50.0	3500.0	28.0	0.6
20293789	50.0	3550.0	28.0	0.6
20293796	50.0	3600.0	28.0	0.6
20293802	50.0	3650.0	28.0	0.6
20293819	50.0	3700.0	28.0	0.6
20293826	50.0	3750.0	28.0	0.6
20293833	50.0	3800.0	28.0	0.6
20293840	50.0	3850.0	28.0	0.6
20293857	50.0	3900.0	28.0	0.6
20293864	50.0	3950.0	28.0	0.6
20293871	50.0	4000.0	28.0	0.6

Hardened Hollow Shafts

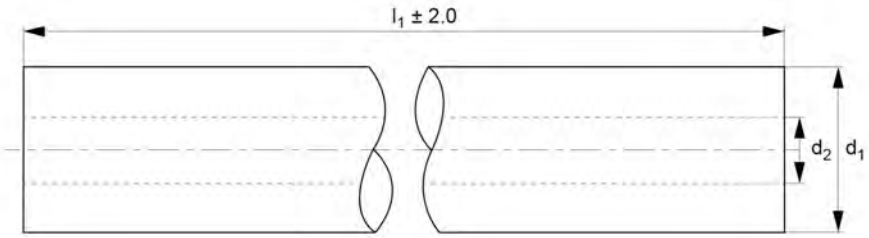



Part Number	d1 tol. h6	l1	d2	Depth of hardness min
20293888	50.0	4050.0	28.0	0.6
20293895	50.0	4100.0	28.0	0.6
20293901	50.0	4150.0	28.0	0.6
20293918	50.0	4200.0	28.0	0.6
20293925	50.0	4250.0	28.0	0.6
20293932	50.0	4300.0	28.0	0.6
20293949	50.0	4350.0	28.0	0.6
20293956	50.0	4400.0	28.0	0.6
20293963	50.0	4450.0	28.0	0.6
20293970	50.0	4500.0	28.0	0.6
20293987	50.0	4550.0	28.0	0.6
20293994	50.0	4600.0	28.0	0.6
20294007	50.0	4650.0	28.0	0.6
20294014	50.0	4700.0	28.0	0.6
20294021	50.0	4750.0	28.0	0.6
20294038	50.0	4800.0	28.0	0.6
20294045	50.0	4850.0	28.0	0.6
20294052	50.0	4900.0	28.0	0.6

Hardened Hollow Shafts

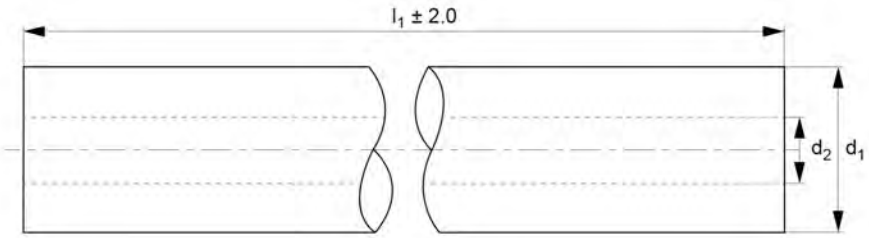



Part Number	d1 tol. h6	l1	d2	Depth of hardness min
20294069	50.0	4950.0	28.0	0.6
20294076	50.0	5000.0	28.0	0.6
20294083	50.0	5050.0	28.0	0.6
20294090	50.0	5100.0	28.0	0.6
20294106	50.0	5150.0	28.0	0.6
20294113	50.0	5200.0	28.0	0.6
20294120	50.0	5250.0	28.0	0.6
20294137	50.0	5300.0	28.0	0.6
20294144	50.0	5350.0	28.0	0.6
20294151	50.0	5400.0	28.0	0.6
20294168	50.0	5450.0	28.0	0.6
20294175	50.0	5500.0	28.0	0.6
20294182	50.0	5550.0	28.0	0.6
20294199	50.0	5600.0	28.0	0.6
20294205	50.0	5650.0	28.0	0.6
20294212	50.0	5700.0	28.0	0.6
20294229	50.0	5750.0	28.0	0.6
20294236	50.0	5800.0	28.0	0.6

Hardened Hollow Shafts

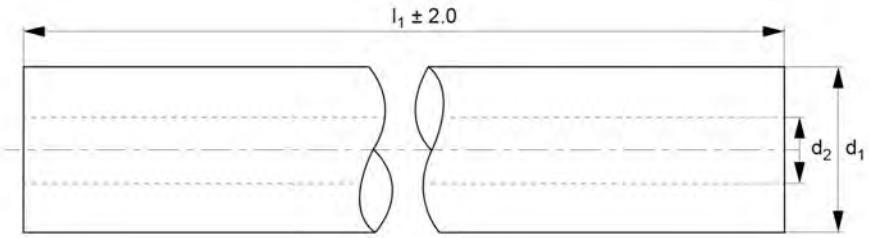



Part Number	d1 tol. h6	l1	d2	Depth of hardness min
20294243	50.0	5850.0	28.0	0.6
20294250	50.0	5900.0	28.0	0.6
20294267	50.0	5950.0	28.0	0.6
20294274	50.0	6000.0	28.0	0.6

Hardened Stainless Shafts

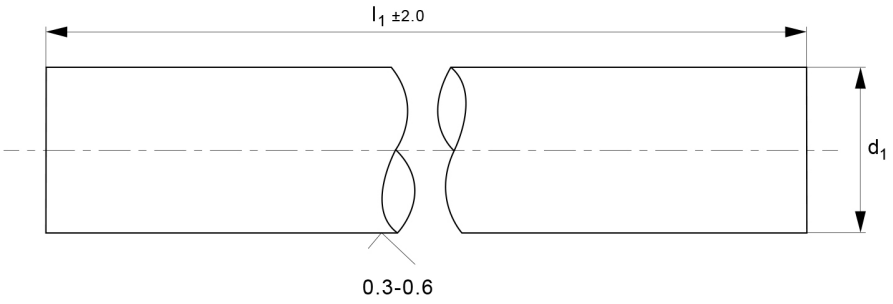



Features

- Suited for applications requiring corrosion, wear, and harsh conditions such as humidity or chemical resistance.
- It provides smooth and precise linear motion when used in conjunction with a linear ball bushing.
- It's found in applications like food processing equipment, automotive systems, and medical devices.

Specifications

Material: Stainless Steel

These Hardened Stainless Shafts provide great strength, durability, and reliability. They are used with linear bearings and are suited for demanding applications requiring corrosion, wear, and harsh conditions such as humidity or chemical resistance without sacrificing structural integrity.

These shafts have a long lifespan and need little maintenance, which reduces downtime and total operating expenses. It provides smooth and precise linear motion when used in conjunction with a linear ball bushing. It's found in applications like food processing equipment, automotive systems, and medical devices.

Part Number	d1 tol. h6	l1	Depth of hardness min
20294281	6.0	100.0	0.4
20294298	6.0	150.0	0.4
20294304	6.0	200.0	0.4
20294311	6.0	250.0	0.4
20294328	6.0	300.0	0.4
20294335	6.0	350.0	0.4
20294342	6.0	400.0	0.4
20294359	6.0	450.0	0.4

Hardened Stainless Shafts

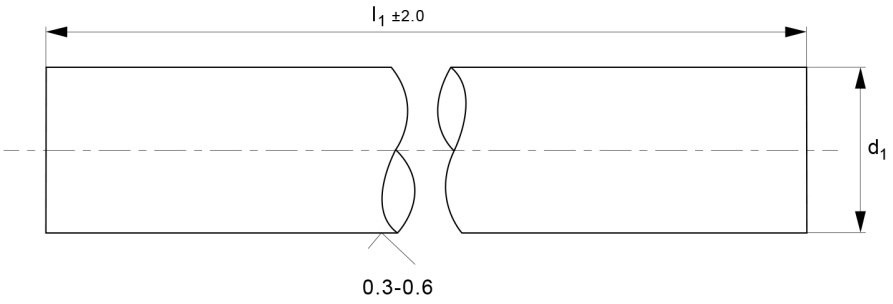



Part Number	d1 tol. h6	l1	Depth of hardness min
20294366	6.0	500.0	0.4
20294373	6.0	550.0	0.4
20294380	6.0	600.0	0.4
20294397	6.0	650.0	0.4
20294403	6.0	700.0	0.4
20294410	6.0	750.0	0.4
20294427	6.0	800.0	0.4
20294434	6.0	850.0	0.4
20294441	6.0	900.0	0.4
20294458	6.0	950.0	0.4
20294465	6.0	1000.0	0.4
20294472	6.0	1050.0	0.4
20294489	6.0	1100.0	0.4
20294496	6.0	1150.0	0.4
20294502	6.0	1200.0	0.4
20294519	6.0	1250.0	0.4
20294526	6.0	1300.0	0.4
20294533	6.0	1350.0	0.4
20294540	6.0	1400.0	0.4
20294557	6.0	1450.0	0.4
20294564	6.0	1500.0	0.4
20294571	6.0	1550.0	0.4
20294588	6.0	1600.0	0.4
20294595	6.0	1650.0	0.4
20294601	6.0	1700.0	0.4
20294618	6.0	1750.0	0.4

Hardened Stainless Shafts

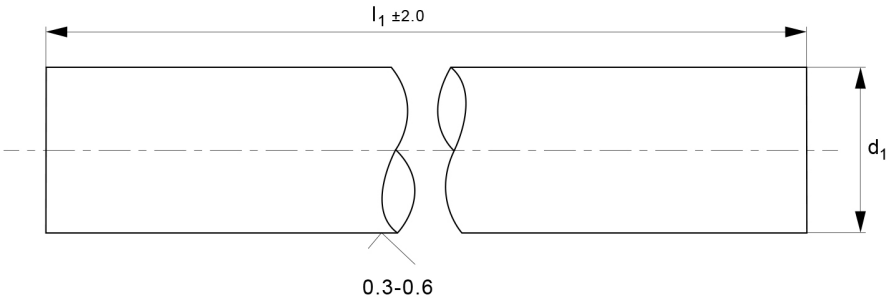



Part Number	d1 tol. h6	l1	Depth of hardness min
20294625	6.0	1800.0	0.4
20294632	6.0	1850.0	0.4
20294649	6.0	1900.0	0.4
20294656	6.0	1950.0	0.4
20294663	6.0	2000.0	0.4
20294670	6.0	2050.0	0.4
20294687	6.0	2100.0	0.4
20294694	6.0	2150.0	0.4
20294700	6.0	2200.0	0.4
20294717	6.0	2250.0	0.4
20294724	6.0	2300.0	0.4
20294731	6.0	2350.0	0.4
20294748	6.0	2400.0	0.4
20294755	6.0	2450.0	0.4
20294762	6.0	2500.0	0.4
20294779	6.0	2550.0	0.4
20294786	6.0	2600.0	0.4
20294793	6.0	2650.0	0.4
20294809	6.0	2700.0	0.4
20294816	6.0	2750.0	0.4
20294823	6.0	2800.0	0.4
20294830	6.0	2850.0	0.4
20294847	6.0	2900.0	0.4
20294854	6.0	2950.0	0.4
20294861	6.0	3000.0	0.4
20294878	6.0	3050.0	0.4

Hardened Stainless Shafts

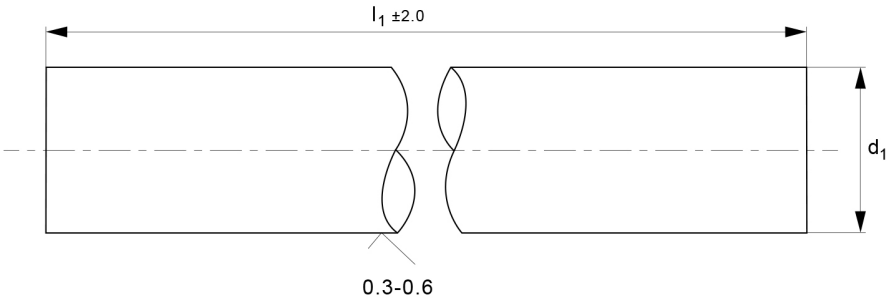



Part Number	d1 tol. h6	l1	Depth of hardness min
20294885	6.0	3100.0	0.4
20294892	6.0	3150.0	0.4
20294908	6.0	3200.0	0.4
20294915	6.0	3250.0	0.4
20294922	6.0	3300.0	0.4
20294939	6.0	3350.0	0.4
20294946	6.0	3400.0	0.4
20294953	6.0	3450.0	0.4
20294960	6.0	3500.0	0.4
20294977	6.0	3550.0	0.4
20294984	6.0	3600.0	0.4
20294991	6.0	3650.0	0.4
20295004	6.0	3700.0	0.4
20295011	6.0	3750.0	0.4
20295028	6.0	3800.0	0.4
20295035	6.0	3850.0	0.4
20295042	6.0	3900.0	0.4
20295059	6.0	3950.0	0.4
20295066	6.0	4000.0	0.4
20295073	6.0	4050.0	0.4
20295080	6.0	4100.0	0.4
20295097	6.0	4150.0	0.4
20295103	6.0	4200.0	0.4
20295110	6.0	4250.0	0.4
20295127	6.0	4300.0	0.4
20295134	6.0	4350.0	0.4

Hardened Stainless Shafts

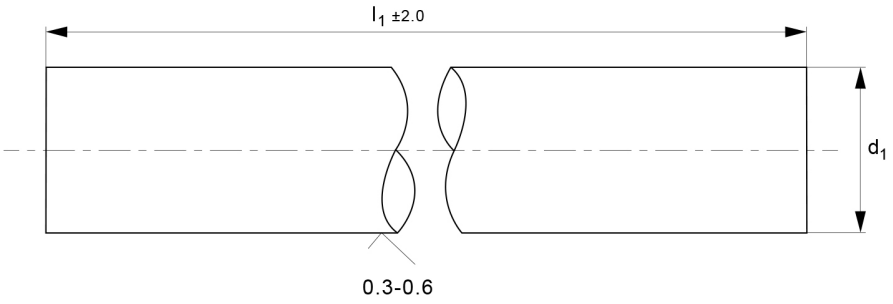



Part Number	d1 tol. h6	l1	Depth of hardness min
20295141	6.0	4400.0	0.4
20295158	6.0	4450.0	0.4
20295165	6.0	4500.0	0.4
20295172	6.0	4550.0	0.4
20295189	6.0	4600.0	0.4
20295196	6.0	4650.0	0.4
20295202	6.0	4700.0	0.4
20295219	6.0	4750.0	0.4
20295226	6.0	4800.0	0.4
20295233	6.0	4850.0	0.4
20295240	6.0	4900.0	0.4
20295257	6.0	4950.0	0.4
20295264	6.0	5000.0	0.4
20295271	6.0	5050.0	0.4
20295288	6.0	5100.0	0.4
20295295	6.0	5150.0	0.4
20295301	6.0	5200.0	0.4
20295318	6.0	5250.0	0.4
20295325	6.0	5300.0	0.4
20295332	6.0	5350.0	0.4
20295349	6.0	5400.0	0.4
20295356	6.0	5450.0	0.4
20295363	6.0	5500.0	0.4
20295370	6.0	5550.0	0.4
20295387	6.0	5600.0	0.4
20295394	6.0	5650.0	0.4

Hardened Stainless Shafts

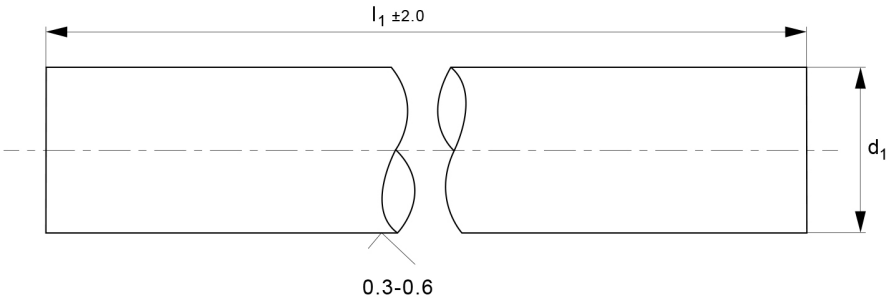



Part Number	d1 tol. h6	l1	Depth of hardness min
20295400	6.0	5700.0	0.4
20295417	6.0	5750.0	0.4
20295424	6.0	5800.0	0.4
20295431	6.0	5850.0	0.4
20295448	6.0	5900.0	0.4
20295455	6.0	5950.0	0.4
20295462	6.0	6000.0	0.4
20295479	8.0	100.0	0.4
20295486	8.0	150.0	0.4
20295493	8.0	200.0	0.4
20295509	8.0	250.0	0.4
20295516	8.0	300.0	0.4
20295523	8.0	350.0	0.4
20295530	8.0	400.0	0.4
20295547	8.0	450.0	0.4
20295554	8.0	500.0	0.4
20295561	8.0	550.0	0.4
20295578	8.0	600.0	0.4
20295585	8.0	650.0	0.4
20295592	8.0	700.0	0.4
20295608	8.0	750.0	0.4
20295615	8.0	800.0	0.4
20295622	8.0	850.0	0.4
20295639	8.0	900.0	0.4
20295646	8.0	950.0	0.4
20295653	8.0	1000.0	0.4

Hardened Stainless Shafts

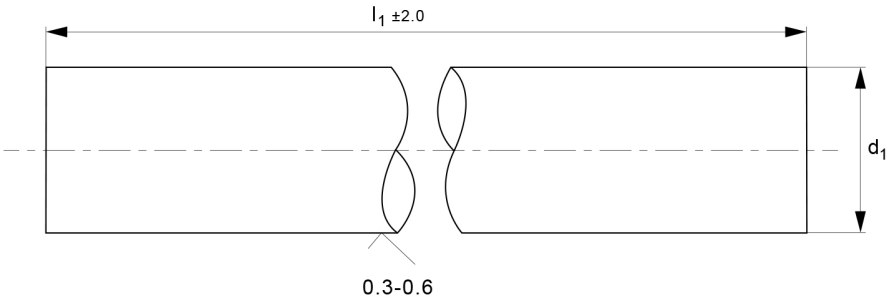



Part Number	d1 tol. h6	l1	Depth of hardness min
20295660	8.0	1050.0	0.4
20295677	8.0	1100.0	0.4
20295684	8.0	1150.0	0.4
20295691	8.0	1200.0	0.4
20295707	8.0	1250.0	0.4
20295714	8.0	1300.0	0.4
20295721	8.0	1350.0	0.4
20295738	8.0	1400.0	0.4
20295745	8.0	1450.0	0.4
20295752	8.0	1500.0	0.4
20295769	8.0	1550.0	0.4
20295776	8.0	1600.0	0.4
20295783	8.0	1650.0	0.4
20295790	8.0	1700.0	0.4
20295806	8.0	1750.0	0.4
20295813	8.0	1800.0	0.4
20295820	8.0	1850.0	0.4
20295837	8.0	1900.0	0.4
20295844	8.0	1950.0	0.4
20295851	8.0	2000.0	0.4
20295868	8.0	2050.0	0.4
20295875	8.0	2100.0	0.4
20295882	8.0	2150.0	0.4
20295899	8.0	2200.0	0.4
20295905	8.0	2250.0	0.4
20295912	8.0	2300.0	0.4

Hardened Stainless Shafts

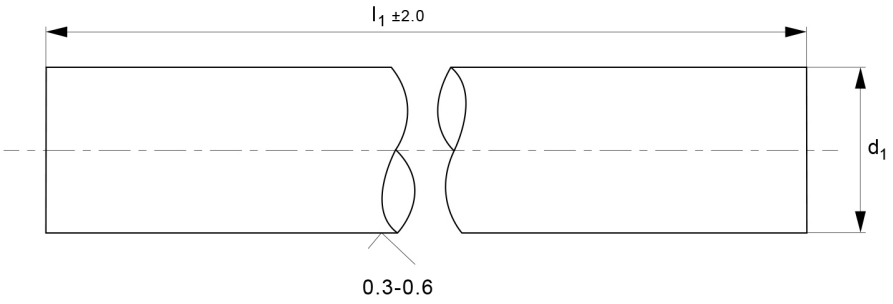



Part Number	d1 tol. h6	l1	Depth of hardness min
20295929	8.0	2350.0	0.4
20295936	8.0	2400.0	0.4
20295943	8.0	2450.0	0.4
20295950	8.0	2500.0	0.4
20295967	8.0	2550.0	0.4
20295974	8.0	2600.0	0.4
20295981	8.0	2650.0	0.4
20295998	8.0	2700.0	0.4
20296001	8.0	2750.0	0.4
20296018	8.0	2800.0	0.4
20296025	8.0	2850.0	0.4
20296032	8.0	2900.0	0.4
20296049	8.0	2950.0	0.4
20296056	8.0	3000.0	0.4
20296063	8.0	3050.0	0.4
20296070	8.0	3100.0	0.4
20296087	8.0	3150.0	0.4
20296094	8.0	3200.0	0.4
20296100	8.0	3250.0	0.4
20296117	8.0	3300.0	0.4
20296124	8.0	3350.0	0.4
20296131	8.0	3400.0	0.4
20296148	8.0	3450.0	0.4
20296155	8.0	3500.0	0.4
20296162	8.0	3550.0	0.4
20296179	8.0	3600.0	0.4

Hardened Stainless Shafts

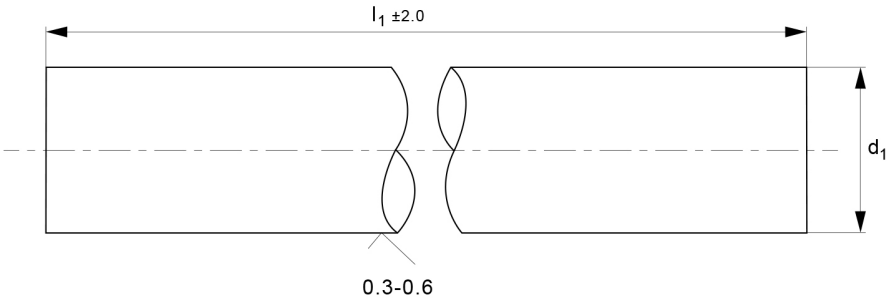



Part Number	d1 tol. h6	l1	Depth of hardness min
20296186	8.0	3650.0	0.4
20296193	8.0	3700.0	0.4
20296209	8.0	3750.0	0.4
20296216	8.0	3800.0	0.4
20296223	8.0	3850.0	0.4
20296230	8.0	3900.0	0.4
20296247	8.0	3950.0	0.4
20296254	8.0	4000.0	0.4
20296261	8.0	4050.0	0.4
20296278	8.0	4100.0	0.4
20296285	8.0	4150.0	0.4
20296292	8.0	4200.0	0.4
20296308	8.0	4250.0	0.4
20296315	8.0	4300.0	0.4
20296322	8.0	4350.0	0.4
20296339	8.0	4400.0	0.4
20296346	8.0	4450.0	0.4
20296353	8.0	4500.0	0.4
20296360	8.0	4550.0	0.4
20296377	8.0	4600.0	0.4
20296384	8.0	4650.0	0.4
20296391	8.0	4700.0	0.4
20296407	8.0	4750.0	0.4
20296414	8.0	4800.0	0.4
20296421	8.0	4850.0	0.4
20296438	8.0	4900.0	0.4

Hardened Stainless Shafts

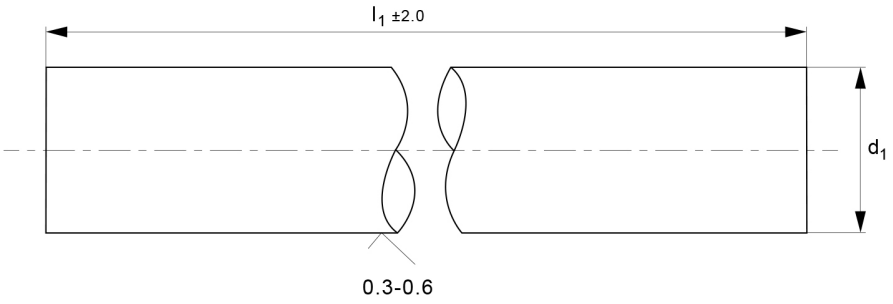



Part Number	d1 tol. h6	l1	Depth of hardness min
20296445	8.0	4950.0	0.4
20296452	8.0	5000.0	0.4
20296469	8.0	5050.0	0.4
20296476	8.0	5100.0	0.4
20296483	8.0	5150.0	0.4
20296490	8.0	5200.0	0.4
20296506	8.0	5250.0	0.4
20296513	8.0	5300.0	0.4
20296520	8.0	5350.0	0.4
20296537	8.0	5400.0	0.4
20296544	8.0	5450.0	0.4
20296551	8.0	5500.0	0.4
20296568	8.0	5550.0	0.4
20296575	8.0	5600.0	0.4
20296582	8.0	5650.0	0.4
20296599	8.0	5700.0	0.4
20296605	8.0	5750.0	0.4
20296612	8.0	5800.0	0.4
20296629	8.0	5850.0	0.4
20296636	8.0	5900.0	0.4
20296643	8.0	5950.0	0.4
20296650	8.0	6000.0	0.4
20296667	10.0	100.0	0.4
20296674	10.0	150.0	0.4
20296681	10.0	200.0	0.4
20296698	10.0	250.0	0.4

Hardened Stainless Shafts

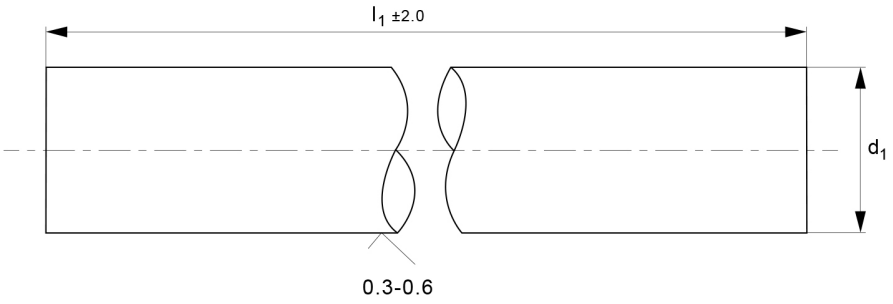



Part Number	d1 tol. h6	l1	Depth of hardness min
20296704	10.0	300.0	0.4
20296711	10.0	350.0	0.4
20296728	10.0	400.0	0.4
20296735	10.0	450.0	0.4
20296742	10.0	500.0	0.4
20296759	10.0	550.0	0.4
20296766	10.0	600.0	0.4
20296773	10.0	650.0	0.4
20296780	10.0	700.0	0.4
20296797	10.0	750.0	0.4
20296803	10.0	800.0	0.4
20296810	10.0	850.0	0.4
20296827	10.0	900.0	0.4
20296834	10.0	950.0	0.4
20296841	10.0	1000.0	0.4
20296858	10.0	1050.0	0.4
20296865	10.0	1100.0	0.4
20296872	10.0	1150.0	0.4
20296889	10.0	1200.0	0.4
20296896	10.0	1250.0	0.4
20296902	10.0	1300.0	0.4
20296919	10.0	1350.0	0.4
20296926	10.0	1400.0	0.4
20296933	10.0	1450.0	0.4
20296940	10.0	1500.0	0.4
20296957	10.0	1550.0	0.4

Hardened Stainless Shafts

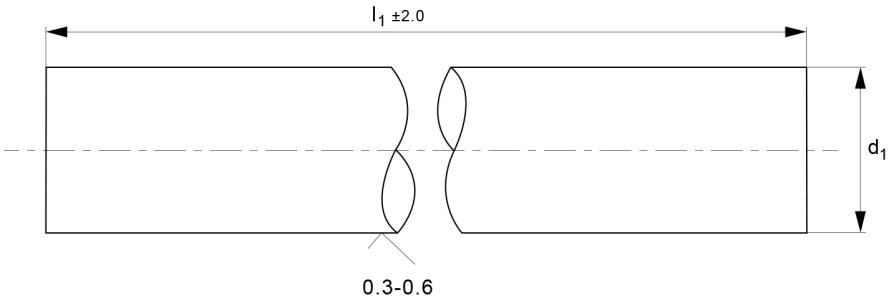



Part Number	d1 tol. h6	l1	Depth of hardness min
20296964	10.0	1600.0	0.4
20296971	10.0	1650.0	0.4
20296988	10.0	1700.0	0.4
20296995	10.0	1750.0	0.4
20297008	10.0	1800.0	0.4
20297015	10.0	1850.0	0.4
20297022	10.0	1900.0	0.4
20297039	10.0	1950.0	0.4
20297046	10.0	2000.0	0.4
20297053	10.0	2050.0	0.4
20297060	10.0	2100.0	0.4
20297077	10.0	2150.0	0.4
20297084	10.0	2200.0	0.4
20297091	10.0	2250.0	0.4
20297107	10.0	2300.0	0.4
20297114	10.0	2350.0	0.4
20297121	10.0	2400.0	0.4
20297138	10.0	2450.0	0.4
20297145	10.0	2500.0	0.4
20297152	10.0	2550.0	0.4
20297169	10.0	2600.0	0.4
20297176	10.0	2650.0	0.4
20297183	10.0	2700.0	0.4
20297190	10.0	2750.0	0.4
20297206	10.0	2800.0	0.4
20297213	10.0	2850.0	0.4

Hardened Stainless Shafts

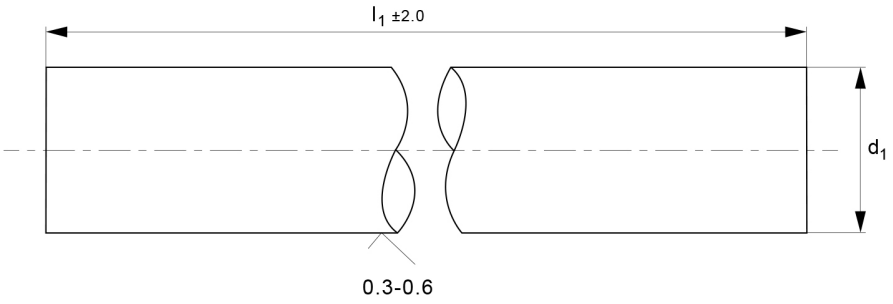



Part Number	d1 tol. h6	l1	Depth of hardness min
20297220	10.0	2900.0	0.4
20297237	10.0	2950.0	0.4
20297244	10.0	3000.0	0.4
20297251	10.0	3050.0	0.4
20297268	10.0	3100.0	0.4
20297275	10.0	3150.0	0.4
20297282	10.0	3200.0	0.4
20297299	10.0	3250.0	0.4
20297305	10.0	3300.0	0.4
20297312	10.0	3350.0	0.4
20297329	10.0	3400.0	0.4
20297336	10.0	3450.0	0.4
20297343	10.0	3500.0	0.4
20297350	10.0	3550.0	0.4
20297367	10.0	3600.0	0.4
20297374	10.0	3650.0	0.4
20297381	10.0	3700.0	0.4
20297398	10.0	3750.0	0.4
20297404	10.0	3800.0	0.4
20297411	10.0	3850.0	0.4
20297428	10.0	3900.0	0.4
20297435	10.0	3950.0	0.4
20297442	10.0	4000.0	0.4
20297459	10.0	4050.0	0.4
20297466	10.0	4100.0	0.4
20297473	10.0	4150.0	0.4

Hardened Stainless Shafts

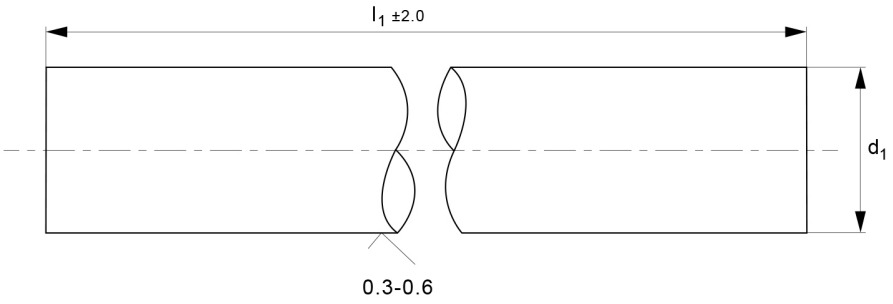



Part Number	d1 tol. h6	l1	Depth of hardness min
20297480	10.0	4200.0	0.4
20297497	10.0	4250.0	0.4
20297503	10.0	4300.0	0.4
20297510	10.0	4350.0	0.4
20297527	10.0	4400.0	0.4
20297534	10.0	4450.0	0.4
20297541	10.0	4500.0	0.4
20297558	10.0	4550.0	0.4
20297565	10.0	4600.0	0.4
20297572	10.0	4650.0	0.4
20297589	10.0	4700.0	0.4
20297596	10.0	4750.0	0.4
20297602	10.0	4800.0	0.4
20297619	10.0	4850.0	0.4
20297626	10.0	4900.0	0.4
20297633	10.0	4950.0	0.4
20297640	10.0	5000.0	0.4
20297657	10.0	5050.0	0.4
20297664	10.0	5100.0	0.4
20297671	10.0	5150.0	0.4
20297688	10.0	5200.0	0.4
20297695	10.0	5250.0	0.4
20297701	10.0	5300.0	0.4
20297718	10.0	5350.0	0.4
20297725	10.0	5400.0	0.4
20297732	10.0	5450.0	0.4

Hardened Stainless Shafts

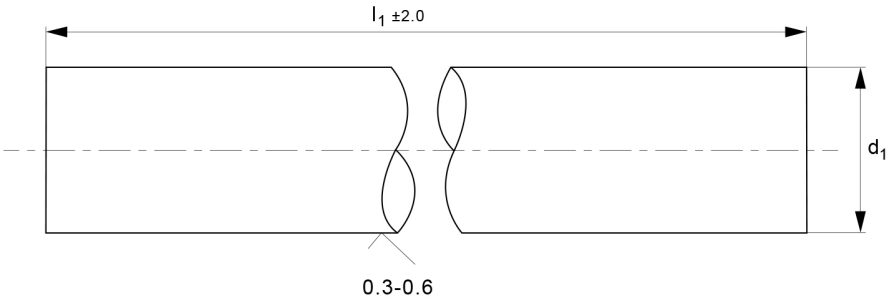



Part Number	d1 tol. h6	l1	Depth of hardness min
20297749	10.0	5500.0	0.4
20297756	10.0	5550.0	0.4
20297763	10.0	5600.0	0.4
20297770	10.0	5650.0	0.4
20297787	10.0	5700.0	0.4
20297794	10.0	5750.0	0.4
20297800	10.0	5800.0	0.4
20297817	10.0	5850.0	0.4
20297824	10.0	5900.0	0.4
20297831	10.0	5950.0	0.4
20297848	10.0	6000.0	0.4
20297855	12.0	100.0	0.6
20297862	12.0	150.0	0.6
20297879	12.0	200.0	0.6
20297886	12.0	250.0	0.6
20297893	12.0	300.0	0.6
20297909	12.0	350.0	0.6
20297916	12.0	400.0	0.6
20297923	12.0	450.0	0.6
20297930	12.0	500.0	0.6
20297947	12.0	550.0	0.6
20297954	12.0	600.0	0.6
20297961	12.0	650.0	0.6
20297978	12.0	700.0	0.6
20297985	12.0	750.0	0.6
20297992	12.0	800.0	0.6

Hardened Stainless Shafts

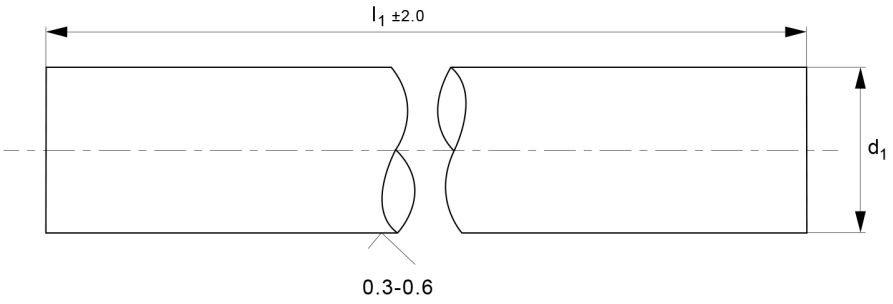



Part Number	d1 tol. h6	l1	Depth of hardness min
20298005	12.0	850.0	0.6
20298012	12.0	900.0	0.6
20298029	12.0	950.0	0.6
20298036	12.0	1000.0	0.6
20298043	12.0	1050.0	0.6
20298050	12.0	1100.0	0.6
20298067	12.0	1150.0	0.6
20298074	12.0	1200.0	0.6
20298081	12.0	1250.0	0.6
20298098	12.0	1300.0	0.6
20298104	12.0	1350.0	0.6
20298111	12.0	1400.0	0.6
20298128	12.0	1450.0	0.6
20298135	12.0	1500.0	0.6
20298142	12.0	1550.0	0.6
20298159	12.0	1600.0	0.6
20298166	12.0	1650.0	0.6
20298173	12.0	1700.0	0.6
20298180	12.0	1750.0	0.6
20298197	12.0	1800.0	0.6
20298203	12.0	1850.0	0.6
20298210	12.0	1900.0	0.6
20298227	12.0	1950.0	0.6
20298234	12.0	2000.0	0.6
20298241	12.0	2050.0	0.6
20298258	12.0	2100.0	0.6

Hardened Stainless Shafts

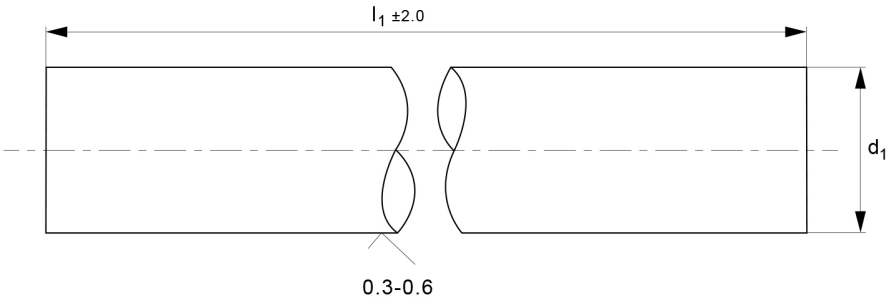



Part Number	d1 tol. h6	l1	Depth of hardness min
20298265	12.0	2150.0	0.6
20298272	12.0	2200.0	0.6
20298289	12.0	2250.0	0.6
20298296	12.0	2300.0	0.6
20298302	12.0	2350.0	0.6
20298319	12.0	2400.0	0.6
20298326	12.0	2450.0	0.6
20298333	12.0	2500.0	0.6
20298340	12.0	2550.0	0.6
20298357	12.0	2600.0	0.6
20298364	12.0	2650.0	0.6
20298371	12.0	2700.0	0.6
20298388	12.0	2750.0	0.6
20298395	12.0	2800.0	0.6
20298401	12.0	2850.0	0.6
20298418	12.0	2900.0	0.6
20298425	12.0	2950.0	0.6
20298432	12.0	3000.0	0.6
20298449	12.0	3050.0	0.6
20298456	12.0	3100.0	0.6
20298463	12.0	3150.0	0.6
20298470	12.0	3200.0	0.6
20298487	12.0	3250.0	0.6
20298494	12.0	3300.0	0.6
20298500	12.0	3350.0	0.6
20298517	12.0	3400.0	0.6

Hardened Stainless Shafts

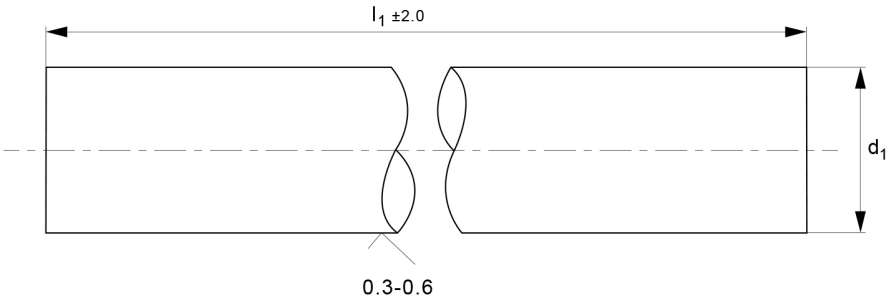



Part Number	d1 tol. h6	l1	Depth of hardness min
20298524	12.0	3450.0	0.6
20298531	12.0	3500.0	0.6
20298548	12.0	3550.0	0.6
20298555	12.0	3600.0	0.6
20298562	12.0	3650.0	0.6
20298579	12.0	3700.0	0.6
20298586	12.0	3750.0	0.6
20298593	12.0	3800.0	0.6
20298609	12.0	3850.0	0.6
20298616	12.0	3900.0	0.6
20298623	12.0	3950.0	0.6
20298630	12.0	4000.0	0.6
20298647	12.0	4050.0	0.6
20298654	12.0	4100.0	0.6
20298661	12.0	4150.0	0.6
20298678	12.0	4200.0	0.6
20298685	12.0	4250.0	0.6
20298692	12.0	4300.0	0.6
20298708	12.0	4350.0	0.6
20298715	12.0	4400.0	0.6
20298722	12.0	4450.0	0.6
20298739	12.0	4500.0	0.6
20298746	12.0	4550.0	0.6
20298753	12.0	4600.0	0.6
20298760	12.0	4650.0	0.6
20298777	12.0	4700.0	0.6

Hardened Stainless Shafts

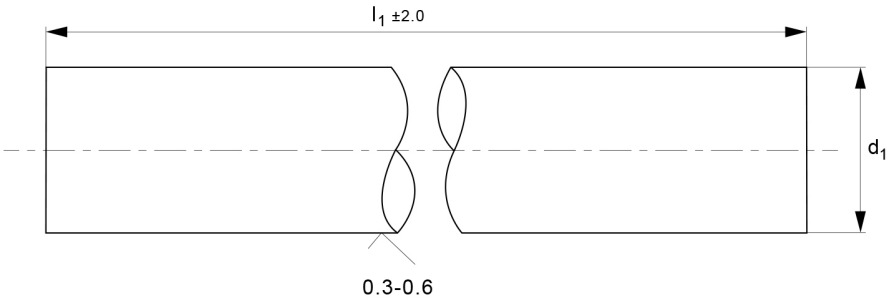



Part Number	d1 tol. h6	l1	Depth of hardness min
20298784	12.0	4750.0	0.6
20298791	12.0	4800.0	0.6
20298807	12.0	4850.0	0.6
20298814	12.0	4900.0	0.6
20298821	12.0	4950.0	0.6
20298838	12.0	5000.0	0.6
20298845	12.0	5050.0	0.6
20298852	12.0	5100.0	0.6
20298869	12.0	5150.0	0.6
20298876	12.0	5200.0	0.6
20298883	12.0	5250.0	0.6
20298890	12.0	5300.0	0.6
20298906	12.0	5350.0	0.6
20298913	12.0	5400.0	0.6
20298920	12.0	5450.0	0.6
20298937	12.0	5500.0	0.6
20298944	12.0	5550.0	0.6
20298951	12.0	5600.0	0.6
20298968	12.0	5650.0	0.6
20298975	12.0	5700.0	0.6
20298982	12.0	5750.0	0.6
20298999	12.0	5800.0	0.6
20299002	12.0	5850.0	0.6
20299019	12.0	5900.0	0.6
20299026	12.0	5950.0	0.6
20299033	12.0	6000.0	0.6

Hardened Stainless Shafts

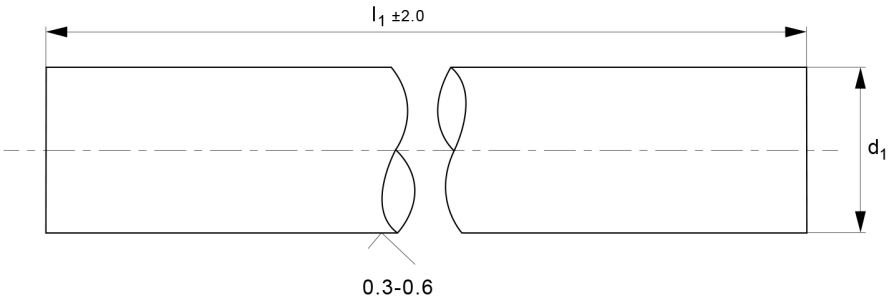



Part Number	d1 tol. h6	l1	Depth of hardness min
20299040	16.0	100.0	0.6
20299057	16.0	150.0	0.6
20299064	16.0	200.0	0.6
20299071	16.0	250.0	0.6
20299088	16.0	300.0	0.6
20299095	16.0	350.0	0.6
20299101	16.0	400.0	0.6
20299118	16.0	450.0	0.6
20299125	16.0	500.0	0.6
20299132	16.0	550.0	0.6
20299149	16.0	600.0	0.6
20299156	16.0	650.0	0.6
20299163	16.0	700.0	0.6
20299170	16.0	750.0	0.6
20299187	16.0	800.0	0.6
20299194	16.0	850.0	0.6
20299200	16.0	900.0	0.6
20299217	16.0	950.0	0.6
20299224	16.0	1000.0	0.6
20299231	16.0	1050.0	0.6
20299248	16.0	1100.0	0.6
20299255	16.0	1150.0	0.6
20299262	16.0	1200.0	0.6
20299279	16.0	1250.0	0.6
20299286	16.0	1300.0	0.6
20299293	16.0	1350.0	0.6

Hardened Stainless Shafts

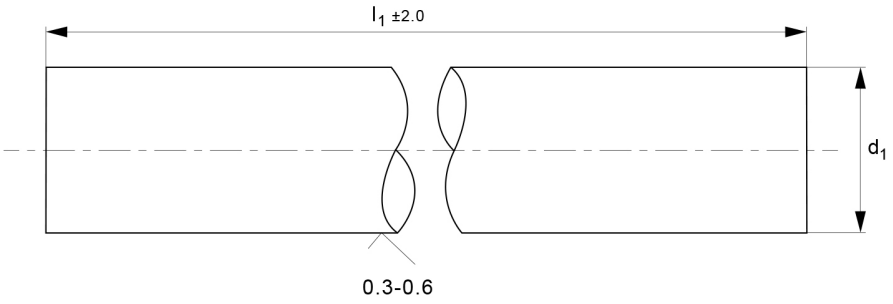



Part Number	d1 tol. h6	l1	Depth of hardness min
20299309	16.0	1400.0	0.6
20299316	16.0	1450.0	0.6
20299323	16.0	1500.0	0.6
20299330	16.0	1550.0	0.6
20299347	16.0	1600.0	0.6
20299354	16.0	1650.0	0.6
20299361	16.0	1700.0	0.6
20299378	16.0	1750.0	0.6
20299385	16.0	1800.0	0.6
20299392	16.0	1850.0	0.6
20299408	16.0	1900.0	0.6
20299415	16.0	1950.0	0.6
20299422	16.0	2000.0	0.6
20299439	16.0	2050.0	0.6
20299446	16.0	2100.0	0.6
20299453	16.0	2150.0	0.6
20299460	16.0	2200.0	0.6
20299477	16.0	2250.0	0.6
20299484	16.0	2300.0	0.6
20299491	16.0	2350.0	0.6
20299507	16.0	2400.0	0.6
20299514	16.0	2450.0	0.6
20299521	16.0	2500.0	0.6
20299538	16.0	2550.0	0.6
20299545	16.0	2600.0	0.6
20299552	16.0	2650.0	0.6

Hardened Stainless Shafts

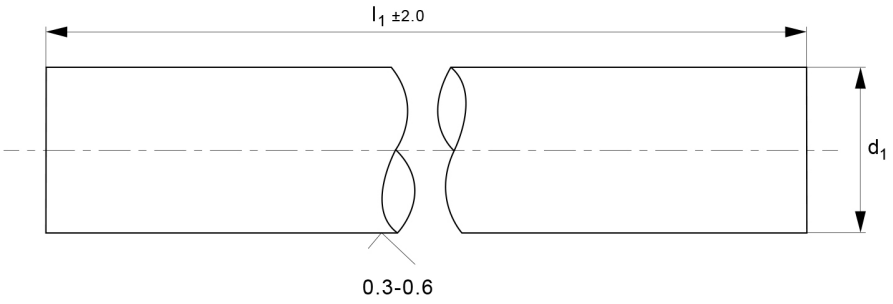



Part Number	d1 tol. h6	l1	Depth of hardness min
20299569	16.0	2700.0	0.6
20299576	16.0	2750.0	0.6
20299583	16.0	2800.0	0.6
20299590	16.0	2850.0	0.6
20299606	16.0	2900.0	0.6
20299613	16.0	2950.0	0.6
20299620	16.0	3000.0	0.6
20299637	16.0	3050.0	0.6
20299644	16.0	3100.0	0.6
20299651	16.0	3150.0	0.6
20299668	16.0	3200.0	0.6
20299675	16.0	3250.0	0.6
20299682	16.0	3300.0	0.6
20299699	16.0	3350.0	0.6
20299705	16.0	3400.0	0.6
20299712	16.0	3450.0	0.6
20299729	16.0	3500.0	0.6
20299736	16.0	3550.0	0.6
20299743	16.0	3600.0	0.6
20299750	16.0	3650.0	0.6
20299767	16.0	3700.0	0.6
20299774	16.0	3750.0	0.6
20299781	16.0	3800.0	0.6
20299798	16.0	3850.0	0.6
20299804	16.0	3900.0	0.6
20299811	16.0	3950.0	0.6

Hardened Stainless Shafts

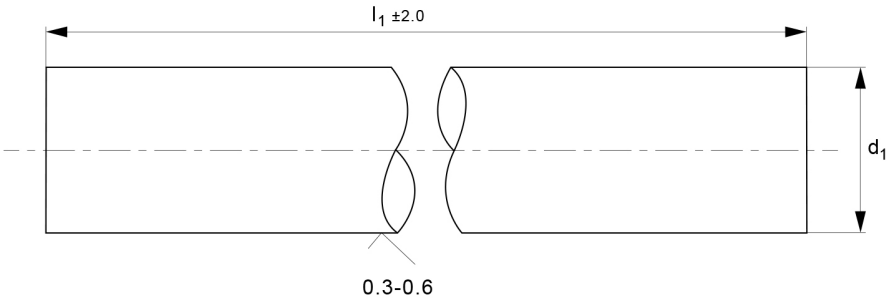



Part Number	d1 tol. h6	l1	Depth of hardness min
20299828	16.0	4000.0	0.6
20299835	16.0	4050.0	0.6
20299842	16.0	4100.0	0.6
20299859	16.0	4150.0	0.6
20299866	16.0	4200.0	0.6
20299873	16.0	4250.0	0.6
20299880	16.0	4300.0	0.6
20299897	16.0	4350.0	0.6
20299903	16.0	4400.0	0.6
20299910	16.0	4450.0	0.6
20299927	16.0	4500.0	0.6
20299934	16.0	4550.0	0.6
20299941	16.0	4600.0	0.6
20299958	16.0	4650.0	0.6
20299965	16.0	4700.0	0.6
20299972	16.0	4750.0	0.6
20299989	16.0	4800.0	0.6
20299996	16.0	4850.0	0.6
20300005	16.0	4900.0	0.6
20300012	16.0	4950.0	0.6
20300029	16.0	5000.0	0.6
20300036	16.0	5050.0	0.6
20300043	16.0	5100.0	0.6
20300050	16.0	5150.0	0.6
20300067	16.0	5200.0	0.6
20300074	16.0	5250.0	0.6

Hardened Stainless Shafts

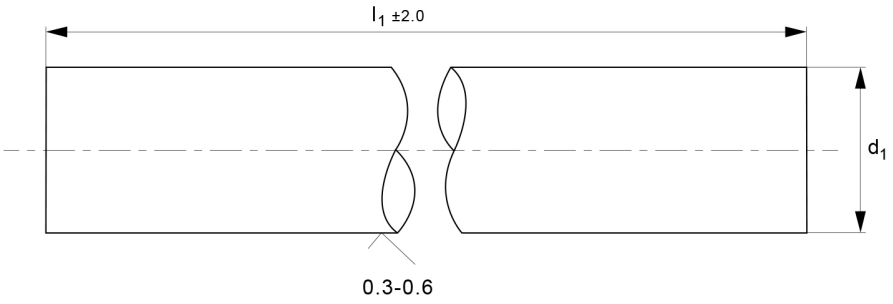



Part Number	d1 tol. h6	l1	Depth of hardness min
20300081	16.0	5300.0	0.6
20300098	16.0	5350.0	0.6
20300104	16.0	5400.0	0.6
20300111	16.0	5450.0	0.6
20300128	16.0	5500.0	0.6
20300135	16.0	5550.0	0.6
20300142	16.0	5600.0	0.6
20300159	16.0	5650.0	0.6
20300166	16.0	5700.0	0.6
20300173	16.0	5750.0	0.6
20300180	16.0	5800.0	0.6
20300197	16.0	5850.0	0.6
20300203	16.0	5900.0	0.6
20300210	16.0	5950.0	0.6
20300227	16.0	6000.0	0.6
20300234	20.0	100.0	0.9
20300241	20.0	150.0	0.9
20300258	20.0	200.0	0.9
20300265	20.0	250.0	0.9
20300272	20.0	300.0	0.9
20300289	20.0	350.0	0.9
20300296	20.0	400.0	0.9
20300302	20.0	450.0	0.9
20300319	20.0	500.0	0.9
20300326	20.0	550.0	0.9
20300333	20.0	600.0	0.9

Hardened Stainless Shafts

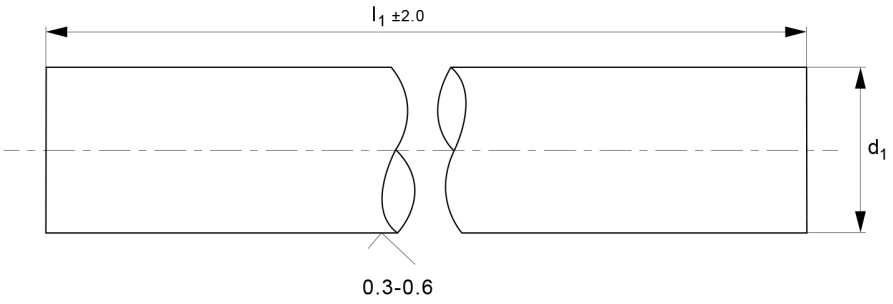



Part Number	d1 tol. h6	l1	Depth of hardness min
20300340	20.0	650.0	0.9
20300357	20.0	700.0	0.9
20300364	20.0	750.0	0.9
20300371	20.0	800.0	0.9
20300388	20.0	850.0	0.9
20300395	20.0	900.0	0.9
20300401	20.0	950.0	0.9
20300418	20.0	1000.0	0.9
20300425	20.0	1050.0	0.9
20300432	20.0	1100.0	0.9
20300449	20.0	1150.0	0.9
20300456	20.0	1200.0	0.9
20300463	20.0	1250.0	0.9
20300470	20.0	1300.0	0.9
20300487	20.0	1350.0	0.9
20300494	20.0	1400.0	0.9
20300500	20.0	1450.0	0.9
20300517	20.0	1500.0	0.9
20300524	20.0	1550.0	0.9
20300531	20.0	1600.0	0.9
20300548	20.0	1650.0	0.9
20300555	20.0	1700.0	0.9
20300562	20.0	1750.0	0.9
20300579	20.0	1800.0	0.9
20300586	20.0	1850.0	0.9
20300593	20.0	1900.0	0.9

Hardened Stainless Shafts

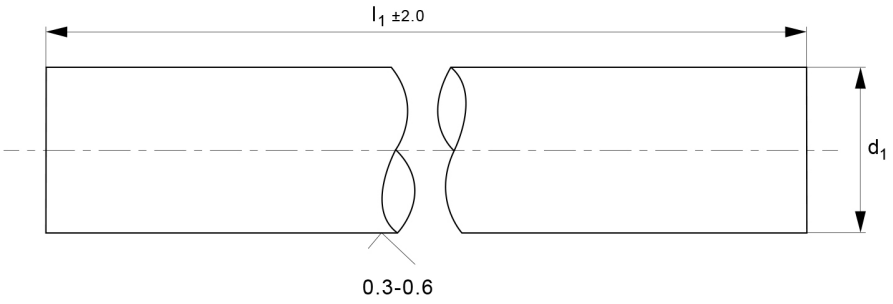



Part Number	d1 tol. h6	l1	Depth of hardness min
20300609	20.0	1950.0	0.9
20300616	20.0	2000.0	0.9
20300623	20.0	2050.0	0.9
20300630	20.0	2100.0	0.9
20300647	20.0	2150.0	0.9
20300654	20.0	2200.0	0.9
20300661	20.0	2250.0	0.9
20300678	20.0	2300.0	0.9
20300685	20.0	2350.0	0.9
20300692	20.0	2400.0	0.9
20300708	20.0	2450.0	0.9
20300715	20.0	2500.0	0.9
20300722	20.0	2550.0	0.9
20300739	20.0	2600.0	0.9
20300746	20.0	2650.0	0.9
20300753	20.0	2700.0	0.9
20300760	20.0	2750.0	0.9
20300777	20.0	2800.0	0.9
20300784	20.0	2850.0	0.9
20300791	20.0	2900.0	0.9
20300807	20.0	2950.0	0.9
20300814	20.0	3000.0	0.9
20300821	20.0	3050.0	0.9
20300838	20.0	3100.0	0.9
20300845	20.0	3150.0	0.9
20300852	20.0	3200.0	0.9

Hardened Stainless Shafts

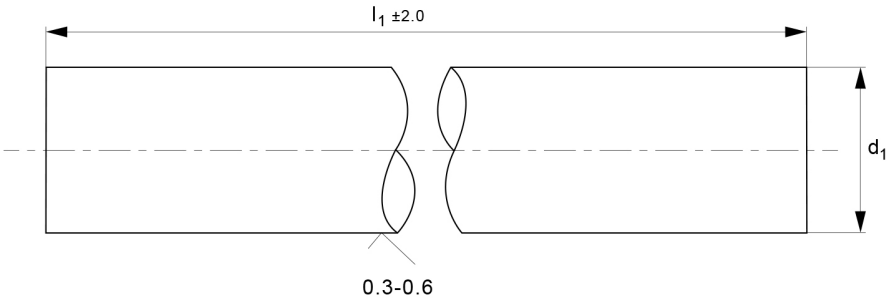



Part Number	d1 tol. h6	l1	Depth of hardness min
20300869	20.0	3250.0	0.9
20300876	20.0	3300.0	0.9
20300883	20.0	3350.0	0.9
20300890	20.0	3400.0	0.9
20300906	20.0	3450.0	0.9
20300913	20.0	3500.0	0.9
20300920	20.0	3550.0	0.9
20300937	20.0	3600.0	0.9
20300944	20.0	3650.0	0.9
20300951	20.0	3700.0	0.9
20300968	20.0	3750.0	0.9
20300975	20.0	3800.0	0.9
20300982	20.0	3850.0	0.9
20300999	20.0	3900.0	0.9
20301002	20.0	3950.0	0.9
20301019	20.0	4000.0	0.9
20301026	20.0	4050.0	0.9
20301033	20.0	4100.0	0.9
20301040	20.0	4150.0	0.9
20301057	20.0	4200.0	0.9
20301064	20.0	4250.0	0.9
20301071	20.0	4300.0	0.9
20301088	20.0	4350.0	0.9
20301095	20.0	4400.0	0.9
20301101	20.0	4450.0	0.9
20301118	20.0	4500.0	0.9

Hardened Stainless Shafts

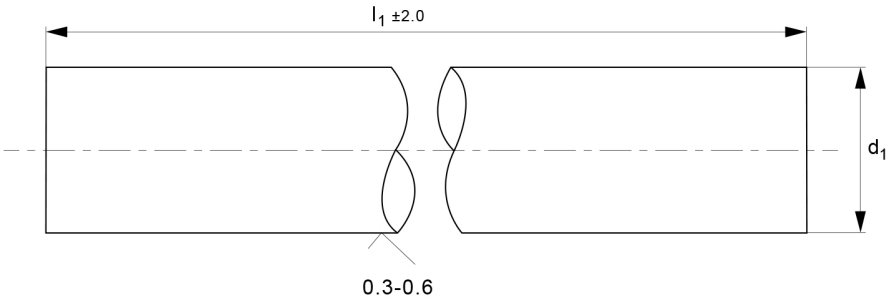



Part Number	d1 tol. h6	l1	Depth of hardness min
20301125	20.0	4550.0	0.9
20301132	20.0	4600.0	0.9
20301149	20.0	4650.0	0.9
20301156	20.0	4700.0	0.9
20301163	20.0	4750.0	0.9
20301170	20.0	4800.0	0.9
20301187	20.0	4850.0	0.9
20301194	20.0	4900.0	0.9
20301200	20.0	4950.0	0.9
20301217	20.0	5000.0	0.9
20301224	20.0	5050.0	0.9
20301231	20.0	5100.0	0.9
20301248	20.0	5150.0	0.9
20301255	20.0	5200.0	0.9
20301262	20.0	5250.0	0.9
20301279	20.0	5300.0	0.9
20301286	20.0	5350.0	0.9
20301293	20.0	5400.0	0.9
20301309	20.0	5450.0	0.9
20301316	20.0	5500.0	0.9
20301323	20.0	5550.0	0.9
20301330	20.0	5600.0	0.9
20301347	20.0	5650.0	0.9
20301354	20.0	5700.0	0.9
20301361	20.0	5750.0	0.9
20301378	20.0	5800.0	0.9

Hardened Stainless Shafts

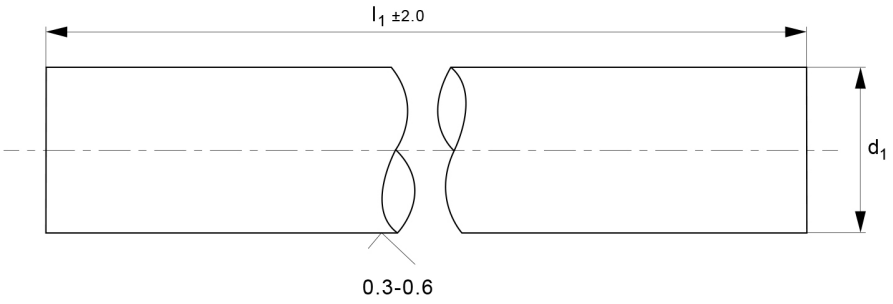



Part Number	d1 tol. h6	l1	Depth of hardness min
20301385	20.0	5850.0	0.9
20301392	20.0	5900.0	0.9
20301408	20.0	5950.0	0.9
20301415	20.0	6000.0	0.9
20301422	25.0	100.0	0.9
20301439	25.0	150.0	0.9
20301446	25.0	200.0	0.9
20301453	25.0	250.0	0.9
20301460	25.0	300.0	0.9
20301477	25.0	350.0	0.9
20301484	25.0	400.0	0.9
20301491	25.0	450.0	0.9
20301507	25.0	500.0	0.9
20301514	25.0	550.0	0.9
20301521	25.0	600.0	0.9
20301538	25.0	650.0	0.9
20301545	25.0	700.0	0.9
20301552	25.0	750.0	0.9
20301569	25.0	800.0	0.9
20301576	25.0	850.0	0.9
20301583	25.0	900.0	0.9
20301590	25.0	950.0	0.9
20301606	25.0	1000.0	0.9
20301613	25.0	1050.0	0.9
20301620	25.0	1100.0	0.9
20301637	25.0	1150.0	0.9

Hardened Stainless Shafts

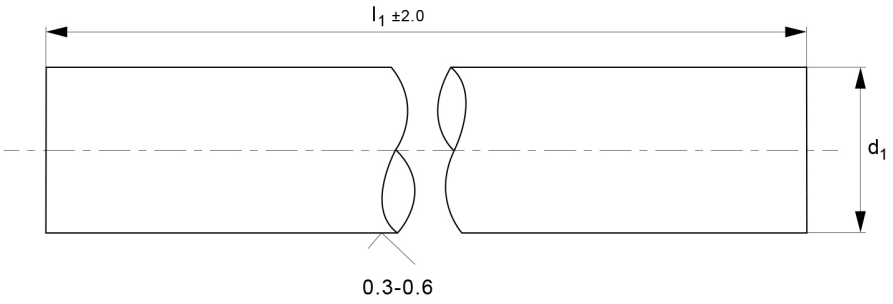



Part Number	d1 tol. h6	l1	Depth of hardness min
20301644	25.0	1200.0	0.9
20301651	25.0	1250.0	0.9
20301668	25.0	1300.0	0.9
20301675	25.0	1350.0	0.9
20301682	25.0	1400.0	0.9
20301699	25.0	1450.0	0.9
20301705	25.0	1500.0	0.9
20301712	25.0	1550.0	0.9
20301729	25.0	1600.0	0.9
20301736	25.0	1650.0	0.9
20301743	25.0	1700.0	0.9
20301750	25.0	1750.0	0.9
20301767	25.0	1800.0	0.9
20301774	25.0	1850.0	0.9
20301781	25.0	1900.0	0.9
20301798	25.0	1950.0	0.9
20301804	25.0	2000.0	0.9
20301811	25.0	2050.0	0.9
20301828	25.0	2100.0	0.9
20301835	25.0	2150.0	0.9
20301842	25.0	2200.0	0.9
20301859	25.0	2250.0	0.9
20301866	25.0	2300.0	0.9
20301873	25.0	2350.0	0.9
20301880	25.0	2400.0	0.9
20301897	25.0	2450.0	0.9

Hardened Stainless Shafts

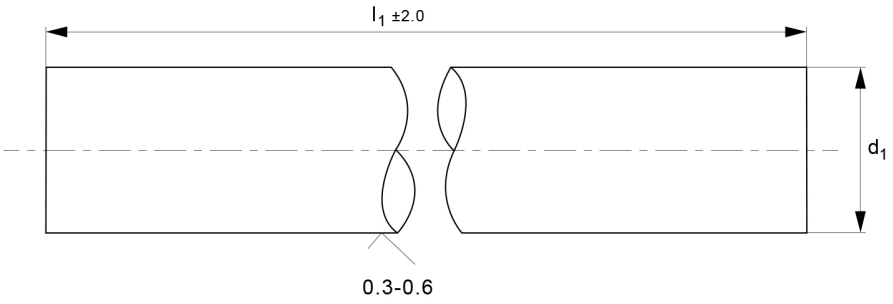



Part Number	d1 tol. h6	l1	Depth of hardness min
20301903	25.0	2500.0	0.9
20301910	25.0	2550.0	0.9
20301927	25.0	2600.0	0.9
20301934	25.0	2650.0	0.9
20301941	25.0	2700.0	0.9
20301958	25.0	2750.0	0.9
20301965	25.0	2800.0	0.9
20301972	25.0	2850.0	0.9
20301989	25.0	2900.0	0.9
20301996	25.0	2950.0	0.9
20302009	25.0	3000.0	0.9
20302016	25.0	3050.0	0.9
20302023	25.0	3100.0	0.9
20302030	25.0	3150.0	0.9
20302047	25.0	3200.0	0.9
20302054	25.0	3250.0	0.9
20302061	25.0	3300.0	0.9
20302078	25.0	3350.0	0.9
20302085	25.0	3400.0	0.9
20302092	25.0	3450.0	0.9
20302108	25.0	3500.0	0.9
20302115	25.0	3550.0	0.9
20302122	25.0	3600.0	0.9
20302139	25.0	3650.0	0.9
20302146	25.0	3700.0	0.9
20302153	25.0	3750.0	0.9

Hardened Stainless Shafts

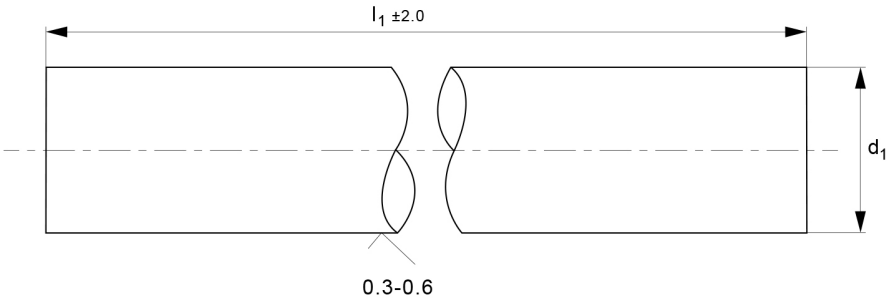



Part Number	d1 tol. h6	l1	Depth of hardness min
20302160	25.0	3800.0	0.9
20302177	25.0	3850.0	0.9
20302184	25.0	3900.0	0.9
20302191	25.0	3950.0	0.9
20302207	25.0	4000.0	0.9
20302214	25.0	4050.0	0.9
20302221	25.0	4100.0	0.9
20302238	25.0	4150.0	0.9
20302245	25.0	4200.0	0.9
20302252	25.0	4250.0	0.9
20302269	25.0	4300.0	0.9
20302276	25.0	4350.0	0.9
20302283	25.0	4400.0	0.9
20302290	25.0	4450.0	0.9
20302306	25.0	4500.0	0.9
20302313	25.0	4550.0	0.9
20302320	25.0	4600.0	0.9
20302337	25.0	4650.0	0.9
20302344	25.0	4700.0	0.9
20302351	25.0	4750.0	0.9
20302368	25.0	4800.0	0.9
20302375	25.0	4850.0	0.9
20302382	25.0	4900.0	0.9
20302399	25.0	4950.0	0.9
20302405	25.0	5000.0	0.9
20302412	25.0	5050.0	0.9

Hardened Stainless Shafts

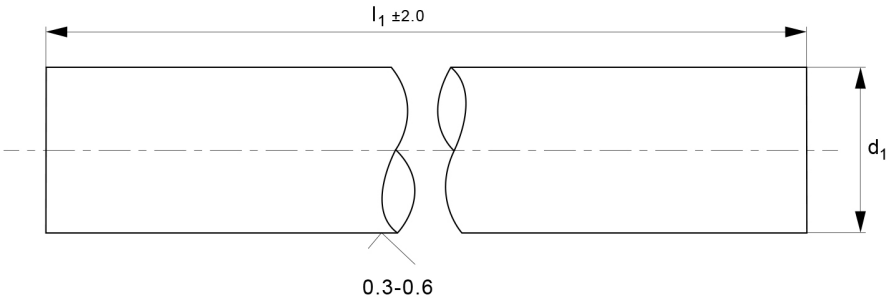



Part Number	d1 tol. h6	l1	Depth of hardness min
20302429	25.0	5100.0	0.9
20302436	25.0	5150.0	0.9
20302443	25.0	5200.0	0.9
20302450	25.0	5250.0	0.9
20302467	25.0	5300.0	0.9
20302474	25.0	5350.0	0.9
20302481	25.0	5400.0	0.9
20302498	25.0	5450.0	0.9
20302504	25.0	5500.0	0.9
20302511	25.0	5550.0	0.9
20302528	25.0	5600.0	0.9
20302535	25.0	5650.0	0.9
20302542	25.0	5700.0	0.9
20302559	25.0	5750.0	0.9
20302566	25.0	5800.0	0.9
20302573	25.0	5850.0	0.9
20302580	25.0	5900.0	0.9
20302597	25.0	5950.0	0.9
20302603	25.0	6000.0	0.9
20302610	30.0	100.0	1.5
20302627	30.0	150.0	1.5
20302634	30.0	200.0	1.5
20302641	30.0	250.0	1.5
20302658	30.0	300.0	1.5
20302665	30.0	350.0	1.5
20302672	30.0	400.0	1.5

Hardened Stainless Shafts

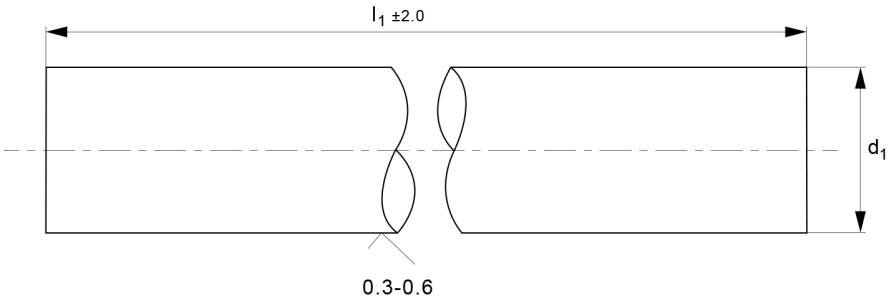



Part Number	d1 tol. h6	l1	Depth of hardness min
20302689	30.0	450.0	1.5
20302696	30.0	500.0	1.5
20302702	30.0	550.0	1.5
20302719	30.0	600.0	1.5
20302726	30.0	650.0	1.5
20302733	30.0	700.0	1.5
20302740	30.0	750.0	1.5
20302757	30.0	800.0	1.5
20302764	30.0	850.0	1.5
20302771	30.0	900.0	1.5
20302788	30.0	950.0	1.5
20302795	30.0	1000.0	1.5
20302801	30.0	1050.0	1.5
20302818	30.0	1100.0	1.5
20302825	30.0	1150.0	1.5
20302832	30.0	1200.0	1.5
20302849	30.0	1250.0	1.5
20302856	30.0	1300.0	1.5
20302863	30.0	1350.0	1.5
20302870	30.0	1400.0	1.5
20302887	30.0	1450.0	1.5
20302894	30.0	1500.0	1.5
20302900	30.0	1550.0	1.5
20302917	30.0	1600.0	1.5
20302924	30.0	1650.0	1.5
20302931	30.0	1700.0	1.5

Hardened Stainless Shafts

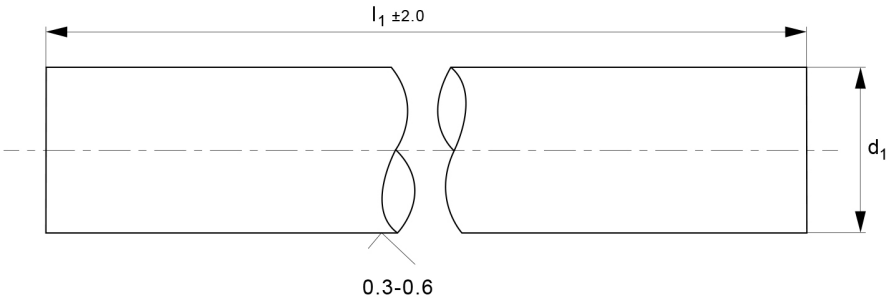



Part Number	d1 tol. h6	l1	Depth of hardness min
20302948	30.0	1750.0	1.5
20302955	30.0	1800.0	1.5
20302962	30.0	1850.0	1.5
20302979	30.0	1900.0	1.5
20302986	30.0	1950.0	1.5
20302993	30.0	2000.0	1.5
20303006	30.0	2050.0	1.5
20303013	30.0	2100.0	1.5
20303020	30.0	2150.0	1.5
20303037	30.0	2200.0	1.5
20303044	30.0	2250.0	1.5
20303051	30.0	2300.0	1.5
20303068	30.0	2350.0	1.5
20303075	30.0	2400.0	1.5
20303082	30.0	2450.0	1.5
20303099	30.0	2500.0	1.5
20303105	30.0	2550.0	1.5
20303112	30.0	2600.0	1.5
20303129	30.0	2650.0	1.5
20303136	30.0	2700.0	1.5
20303143	30.0	2750.0	1.5
20303150	30.0	2800.0	1.5
20303167	30.0	2850.0	1.5
20303174	30.0	2900.0	1.5
20303181	30.0	2950.0	1.5
20303198	30.0	3000.0	1.5

Hardened Stainless Shafts

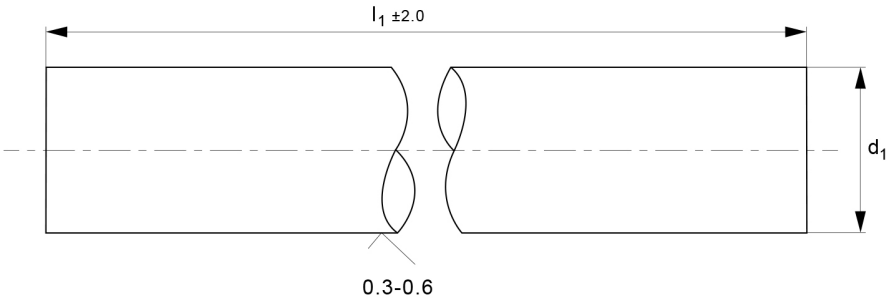



Part Number	d1 tol. h6	l1	Depth of hardness min
20303204	30.0	3050.0	1.5
20303211	30.0	3100.0	1.5
20303228	30.0	3150.0	1.5
20303235	30.0	3200.0	1.5
20303242	30.0	3250.0	1.5
20303259	30.0	3300.0	1.5
20303266	30.0	3350.0	1.5
20303273	30.0	3400.0	1.5
20303280	30.0	3450.0	1.5
20303297	30.0	3500.0	1.5
20303303	30.0	3550.0	1.5
20303310	30.0	3600.0	1.5
20303327	30.0	3650.0	1.5
20303334	30.0	3700.0	1.5
20303341	30.0	3750.0	1.5
20303358	30.0	3800.0	1.5
20303365	30.0	3850.0	1.5
20303372	30.0	3900.0	1.5
20303389	30.0	3950.0	1.5
20303396	30.0	4000.0	1.5
20303402	30.0	4050.0	1.5
20303419	30.0	4100.0	1.5
20303426	30.0	4150.0	1.5
20303433	30.0	4200.0	1.5
20303440	30.0	4250.0	1.5
20303457	30.0	4300.0	1.5

Hardened Stainless Shafts

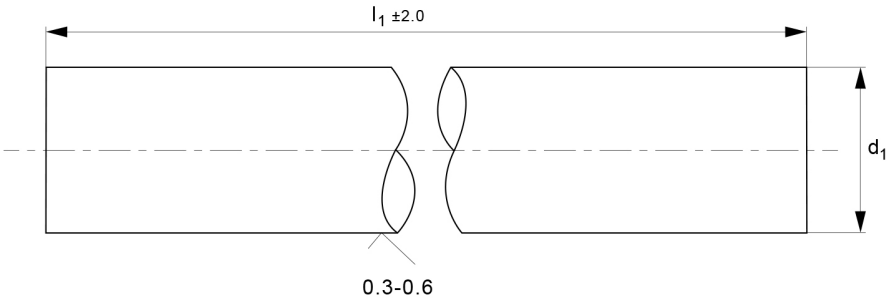



Part Number	d1 tol. h6	l1	Depth of hardness min
20303464	30.0	4350.0	1.5
20303471	30.0	4400.0	1.5
20303488	30.0	4450.0	1.5
20303495	30.0	4500.0	1.5
20303501	30.0	4550.0	1.5
20303518	30.0	4600.0	1.5
20303525	30.0	4650.0	1.5
20303532	30.0	4700.0	1.5
20303549	30.0	4750.0	1.5
20303556	30.0	4800.0	1.5
20303563	30.0	4850.0	1.5
20303570	30.0	4900.0	1.5
20303587	30.0	4950.0	1.5
20303594	30.0	5000.0	1.5
20303600	30.0	5050.0	1.5
20303617	30.0	5100.0	1.5
20303624	30.0	5150.0	1.5
20303631	30.0	5200.0	1.5
20303648	30.0	5250.0	1.5
20303655	30.0	5300.0	1.5
20303662	30.0	5350.0	1.5
20303679	30.0	5400.0	1.5
20303686	30.0	5450.0	1.5
20303693	30.0	5500.0	1.5
20303709	30.0	5550.0	1.5
20303716	30.0	5600.0	1.5

Hardened Stainless Shafts

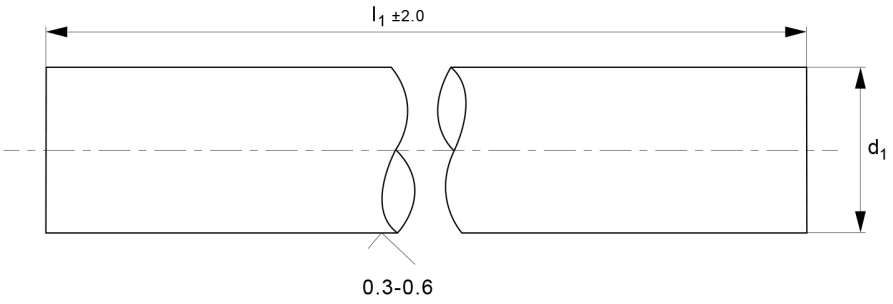



Part Number	d1 tol. h6	l1	Depth of hardness min
20303723	30.0	5650.0	1.5
20303730	30.0	5700.0	1.5
20303747	30.0	5750.0	1.5
20303754	30.0	5800.0	1.5
20303761	30.0	5850.0	1.5
20303778	30.0	5900.0	1.5
20303785	30.0	5950.0	1.5
20303792	30.0	6000.0	1.5
20303808	40.0	100.0	1.5
20303815	40.0	150.0	1.5
20303822	40.0	200.0	1.5
20303839	40.0	250.0	1.5
20303846	40.0	300.0	1.5
20303853	40.0	350.0	1.5
20303860	40.0	400.0	1.5
20303877	40.0	450.0	1.5
20303884	40.0	500.0	1.5
20303891	40.0	550.0	1.5
20303907	40.0	600.0	1.5
20303914	40.0	650.0	1.5
20303921	40.0	700.0	1.5
20303938	40.0	750.0	1.5
20303945	40.0	800.0	1.5
20303952	40.0	850.0	1.5
20303969	40.0	900.0	1.5
20303976	40.0	950.0	1.5

Hardened Stainless Shafts

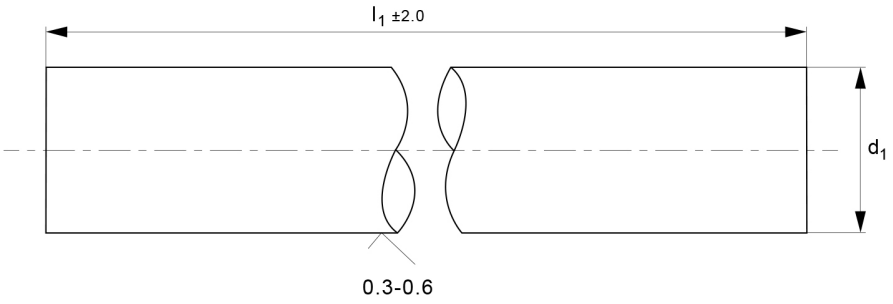



Part Number	d1 tol. h6	l1	Depth of hardness min
20303983	40.0	1000.0	1.5
20303990	40.0	1050.0	1.5
20304003	40.0	1100.0	1.5
20304010	40.0	1150.0	1.5
20304027	40.0	1200.0	1.5
20304034	40.0	1250.0	1.5
20304041	40.0	1300.0	1.5
20304058	40.0	1350.0	1.5
20304065	40.0	1400.0	1.5
20304072	40.0	1450.0	1.5
20304089	40.0	1500.0	1.5
20304096	40.0	1550.0	1.5
20304102	40.0	1600.0	1.5
20304119	40.0	1650.0	1.5
20304126	40.0	1700.0	1.5
20304133	40.0	1750.0	1.5
20304140	40.0	1800.0	1.5
20304157	40.0	1850.0	1.5
20304164	40.0	1900.0	1.5
20304171	40.0	1950.0	1.5
20304188	40.0	2000.0	1.5
20304195	40.0	2050.0	1.5
20304201	40.0	2100.0	1.5
20304218	40.0	2150.0	1.5
20304225	40.0	2200.0	1.5
20304232	40.0	2250.0	1.5

Hardened Stainless Shafts

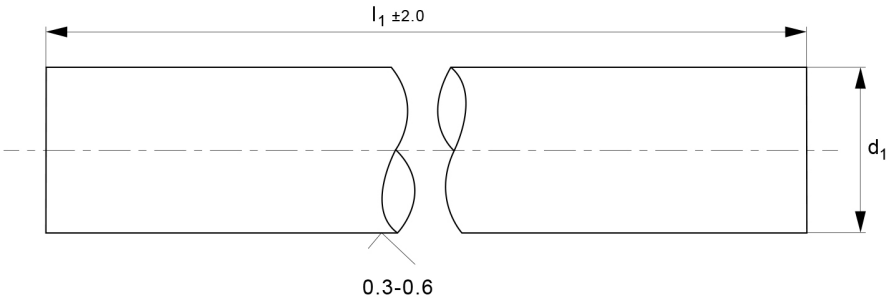



Part Number	d1 tol. h6	l1	Depth of hardness min
20304249	40.0	2300.0	1.5
20304256	40.0	2350.0	1.5
20304263	40.0	2400.0	1.5
20304270	40.0	2450.0	1.5
20304287	40.0	2500.0	1.5
20304294	40.0	2550.0	1.5
20304300	40.0	2600.0	1.5
20304317	40.0	2650.0	1.5
20304324	40.0	2700.0	1.5
20304331	40.0	2750.0	1.5
20304348	40.0	2800.0	1.5
20304355	40.0	2850.0	1.5
20304362	40.0	2900.0	1.5
20304379	40.0	2950.0	1.5
20304386	40.0	3000.0	1.5
20304393	40.0	3050.0	1.5
20304409	40.0	3100.0	1.5
20304416	40.0	3150.0	1.5
20304423	40.0	3200.0	1.5
20304430	40.0	3250.0	1.5
20304447	40.0	3300.0	1.5
20304454	40.0	3350.0	1.5
20304461	40.0	3400.0	1.5
20304478	40.0	3450.0	1.5
20304485	40.0	3500.0	1.5
20304492	40.0	3550.0	1.5

Hardened Stainless Shafts

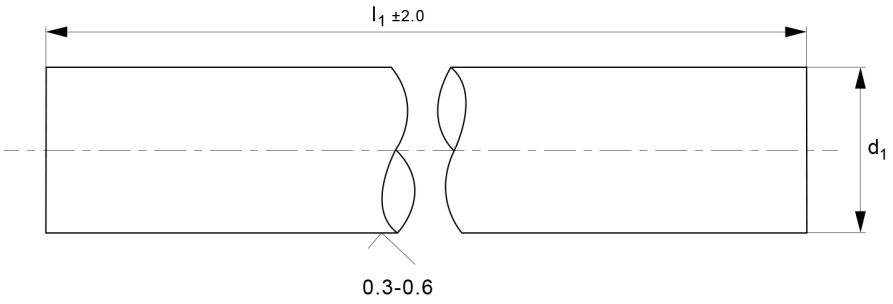



Part Number	d1 tol. h6	l1	Depth of hardness min
20304508	40.0	3600.0	1.5
20304515	40.0	3650.0	1.5
20304522	40.0	3700.0	1.5
20304539	40.0	3750.0	1.5
20304546	40.0	3800.0	1.5
20304553	40.0	3850.0	1.5
20304560	40.0	3900.0	1.5
20304577	40.0	3950.0	1.5
20304584	40.0	4000.0	1.5
20304591	40.0	4050.0	1.5
20304607	40.0	4100.0	1.5
20304614	40.0	4150.0	1.5
20304621	40.0	4200.0	1.5
20304638	40.0	4250.0	1.5
20304645	40.0	4300.0	1.5
20304652	40.0	4350.0	1.5
20304669	40.0	4400.0	1.5
20304676	40.0	4450.0	1.5
20304683	40.0	4500.0	1.5
20304690	40.0	4550.0	1.5
20304706	40.0	4600.0	1.5
20304713	40.0	4650.0	1.5
20304720	40.0	4700.0	1.5
20304737	40.0	4750.0	1.5
20304744	40.0	4800.0	1.5
20304751	40.0	4850.0	1.5

Hardened Stainless Shafts

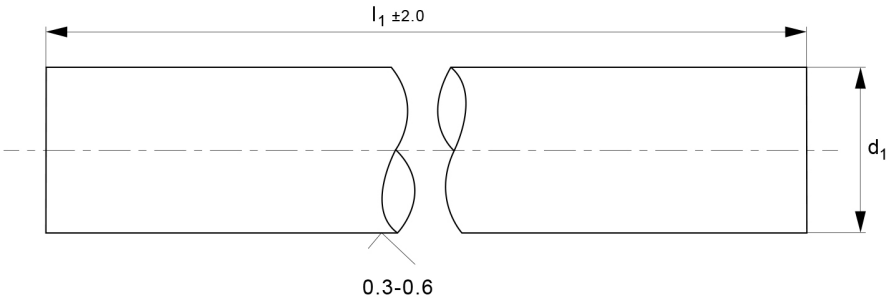



Part Number	d1 tol. h6	l1	Depth of hardness min
20304768	40.0	4900.0	1.5
20304775	40.0	4950.0	1.5
20304782	40.0	5000.0	1.5
20304799	40.0	5050.0	1.5
20304805	40.0	5100.0	1.5
20304812	40.0	5150.0	1.5
20304829	40.0	5200.0	1.5
20304836	40.0	5250.0	1.5
20304843	40.0	5300.0	1.5
20304850	40.0	5350.0	1.5
20304867	40.0	5400.0	1.5
20304874	40.0	5450.0	1.5
20304881	40.0	5500.0	1.5
20304898	40.0	5550.0	1.5
20304904	40.0	5600.0	1.5
20304911	40.0	5650.0	1.5
20304928	40.0	5700.0	1.5
20304935	40.0	5750.0	1.5
20304942	40.0	5800.0	1.5
20304959	40.0	5850.0	1.5
20304966	40.0	5900.0	1.5
20304973	40.0	5950.0	1.5
20304980	40.0	6000.0	1.5
20304997	50.0	100.0	1.5
20305000	50.0	150.0	1.5
20305017	50.0	200.0	1.5

Hardened Stainless Shafts

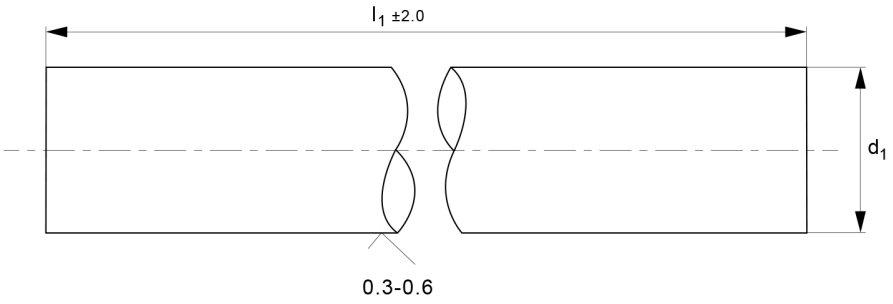



Part Number	d1 tol. h6	l1	Depth of hardness min
20305024	50.0	250.0	1.5
20305031	50.0	300.0	1.5
20305048	50.0	350.0	1.5
20305055	50.0	400.0	1.5
20305062	50.0	450.0	1.5
20305079	50.0	500.0	1.5
20305086	50.0	550.0	1.5
20305093	50.0	600.0	1.5
20305109	50.0	650.0	1.5
20305116	50.0	700.0	1.5
20305123	50.0	750.0	1.5
20305130	50.0	800.0	1.5
20305147	50.0	850.0	1.5
20305154	50.0	900.0	1.5
20305161	50.0	1000.0	1.5
20305178	50.0	1050.0	1.5
20305185	50.0	1100.0	1.5
20305192	50.0	1150.0	1.5
20305208	50.0	1200.0	1.5
20305215	50.0	1250.0	1.5
20305222	50.0	1300.0	1.5
20305239	50.0	1350.0	1.5
20305246	50.0	1400.0	1.5
20305253	50.0	1450.0	1.5
20305260	50.0	1500.0	1.5
20305277	50.0	1550.0	1.5

Hardened Stainless Shafts

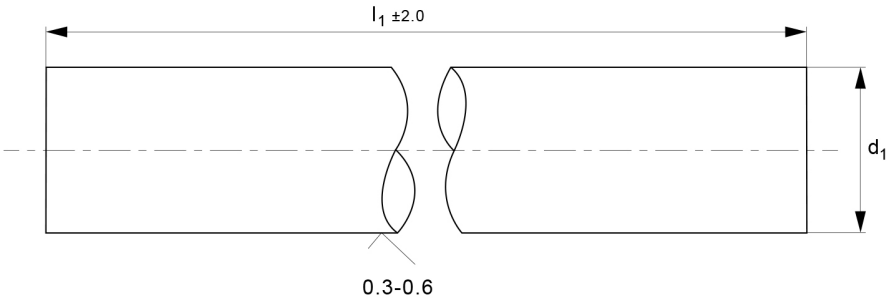



Part Number	d1 tol. h6	l1	Depth of hardness min
20305284	50.0	1600.0	1.5
20305291	50.0	1650.0	1.5
20305307	50.0	1700.0	1.5
20305314	50.0	1750.0	1.5
20305321	50.0	1800.0	1.5
20305338	50.0	1850.0	1.5
20305345	50.0	1900.0	1.5
20305352	50.0	1950.0	1.5
20305369	50.0	2000.0	1.5
20305376	50.0	2050.0	1.5
20305383	50.0	2100.0	1.5
20305390	50.0	2150.0	1.5
20305406	50.0	2200.0	1.5
20305413	50.0	2250.0	1.5
20305420	50.0	2300.0	1.5
20305437	50.0	2350.0	1.5
20305444	50.0	2400.0	1.5
20305451	50.0	2450.0	1.5
20305468	50.0	2500.0	1.5
20305475	50.0	2550.0	1.5
20305482	50.0	2600.0	1.5
20305499	50.0	2650.0	1.5
20305505	50.0	2700.0	1.5
20305512	50.0	2750.0	1.5
20305529	50.0	2800.0	1.5
20305536	50.0	2850.0	1.5

Hardened Stainless Shafts

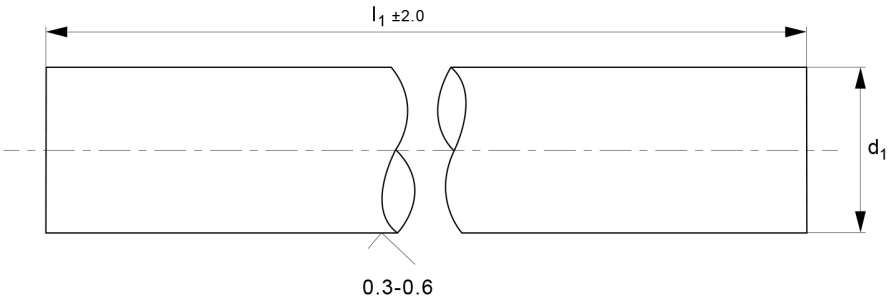



Part Number	d1 tol. h6	l1	Depth of hardness min
20305543	50.0	2900.0	1.5
20305550	50.0	2950.0	1.5
20305567	50.0	3000.0	1.5
20305574	50.0	3050.0	1.5
20305581	50.0	3100.0	1.5
20305598	50.0	3150.0	1.5
20305604	50.0	3200.0	1.5
20305611	50.0	3250.0	1.5
20305628	50.0	3300.0	1.5
20305635	50.0	3350.0	1.5
20305642	50.0	3400.0	1.5
20305659	50.0	3450.0	1.5
20305666	50.0	3500.0	1.5
20305673	50.0	3550.0	1.5
20305680	50.0	3600.0	1.5
20305697	50.0	3650.0	1.5
20305703	50.0	3700.0	1.5
20305710	50.0	3750.0	1.5
20305727	50.0	3800.0	1.5
20305734	50.0	3850.0	1.5
20305741	50.0	3900.0	1.5
20305758	50.0	3950.0	1.5
20305765	50.0	4000.0	1.5
20305772	50.0	4050.0	1.5
20305789	50.0	4100.0	1.5
20305796	50.0	4150.0	1.5

Hardened Stainless Shafts

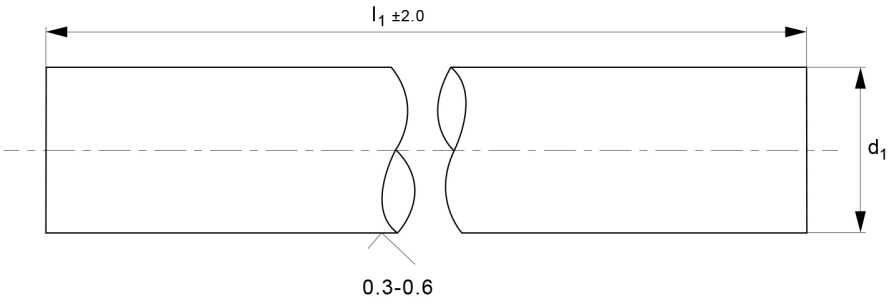



Part Number	d1 tol. h6	l1	Depth of hardness min
20305802	50.0	4200.0	1.5
20305819	50.0	4250.0	1.5
20305826	50.0	4300.0	1.5
20305833	50.0	4350.0	1.5
20305840	50.0	4400.0	1.5
20305857	50.0	4450.0	1.5
20305864	50.0	4500.0	1.5
20305871	50.0	4550.0	1.5
20305888	50.0	4600.0	1.5
20305895	50.0	4650.0	1.5
20305901	50.0	4700.0	1.5
20305918	50.0	4750.0	1.5
20305925	50.0	4800.0	1.5
20305932	50.0	4850.0	1.5
20305949	50.0	4900.0	1.5
20305956	50.0	4950.0	1.5
20305963	50.0	5000.0	1.5
20305970	50.0	5050.0	1.5
20305987	50.0	5100.0	1.5
20305994	50.0	5150.0	1.5
20306007	50.0	5200.0	1.5
20306014	50.0	5250.0	1.5
20306021	50.0	5300.0	1.5
20306038	50.0	5350.0	1.5
20306045	50.0	5400.0	1.5
20306052	50.0	5450.0	1.5

Hardened Stainless Shafts

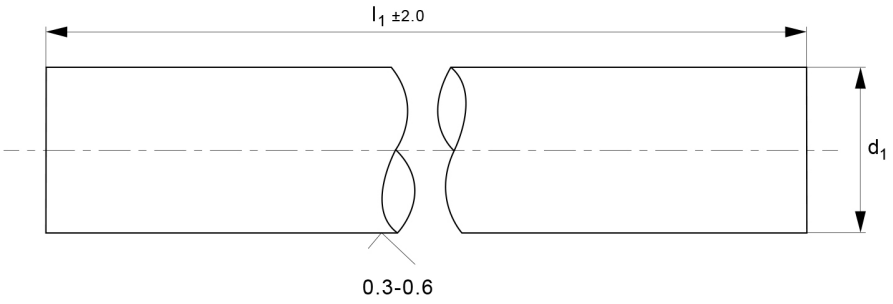



Part Number	d1 tol. h6	l1	Depth of hardness min
20306069	50.0	5500.0	1.5
20306076	50.0	5550.0	1.5
20306083	50.0	5600.0	1.5
20306090	50.0	5650.0	1.5
20306106	50.0	5700.0	1.5
20306113	50.0	5750.0	1.5
20306120	50.0	5800.0	1.5
20306137	50.0	5850.0	1.5
20306144	50.0	5900.0	1.5
20306151	50.0	5950.0	1.5
20306168	50.0	6000.0	1.5
20306175	60.0	100.0	1.5
20306182	60.0	150.0	1.5
20306199	60.0	200.0	1.5
20306205	60.0	250.0	1.5
20306212	60.0	300.0	1.5
20306229	60.0	350.0	1.5
20306236	60.0	400.0	1.5
20306243	60.0	450.0	1.5
20306250	60.0	500.0	1.5
20306267	60.0	550.0	1.5
20306274	60.0	600.0	1.5
20306281	60.0	650.0	1.5
20306298	60.0	700.0	1.5
20306304	60.0	750.0	1.5
20306311	60.0	800.0	1.5

Hardened Stainless Shafts

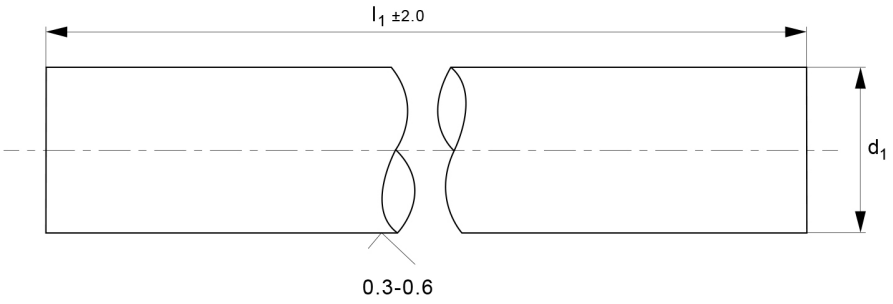



Part Number	d1 tol. h6	l1	Depth of hardness min
20306328	60.0	850.0	1.5
20306335	60.0	900.0	1.5
20306342	60.0	950.0	1.5
20306359	60.0	1000.0	1.5
20306366	60.0	1050.0	1.5
20306373	60.0	1100.0	1.5
20306380	60.0	1150.0	1.5
20306397	60.0	1200.0	1.5
20306403	60.0	1250.0	1.5
20306410	60.0	1300.0	1.5
20306427	60.0	1350.0	1.5
20306434	60.0	1400.0	1.5
20306441	60.0	1450.0	1.5
20306458	60.0	1500.0	1.5
20306465	60.0	1550.0	1.5
20306472	60.0	1600.0	1.5
20306489	60.0	1650.0	1.5
20306496	60.0	1700.0	1.5
20306502	60.0	1750.0	1.5
20306519	60.0	1800.0	1.5
20306526	60.0	1850.0	1.5
20306533	60.0	1900.0	1.5
20306540	60.0	1950.0	1.5
20306557	60.0	2000.0	1.5
20306564	60.0	2050.0	1.5
20306571	60.0	2100.0	1.5

Hardened Stainless Shafts

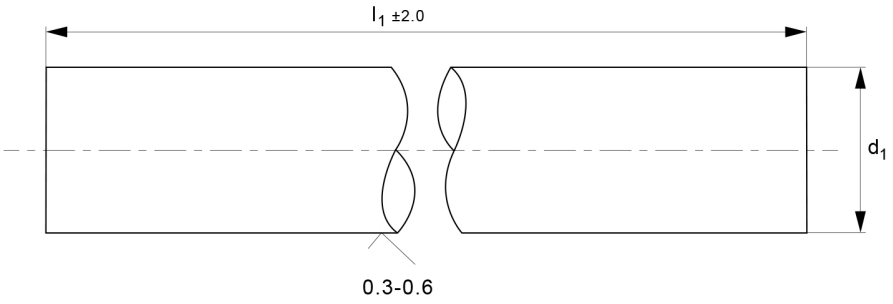



Part Number	d1 tol. h6	l1	Depth of hardness min
20306588	60.0	2150.0	1.5
20306595	60.0	2200.0	1.5
20306601	60.0	2250.0	1.5
20306618	60.0	2300.0	1.5
20306625	60.0	2350.0	1.5
20306632	60.0	2400.0	1.5
20306649	60.0	2450.0	1.5
20306656	60.0	2500.0	1.5
20306663	60.0	2550.0	1.5
20306670	60.0	2600.0	1.5
20306687	60.0	2650.0	1.5
20306694	60.0	2700.0	1.5
20306700	60.0	2750.0	1.5
20306717	60.0	2800.0	1.5
20306724	60.0	2850.0	1.5
20306731	60.0	2900.0	1.5
20306748	60.0	2950.0	1.5
20306755	60.0	3000.0	1.5
20306762	60.0	3050.0	1.5
20306779	60.0	3100.0	1.5
20306786	60.0	3150.0	1.5
20306793	60.0	3200.0	1.5
20306809	60.0	3250.0	1.5
20306816	60.0	3300.0	1.5
20306823	60.0	3350.0	1.5
20306830	60.0	3400.0	1.5

Hardened Stainless Shafts

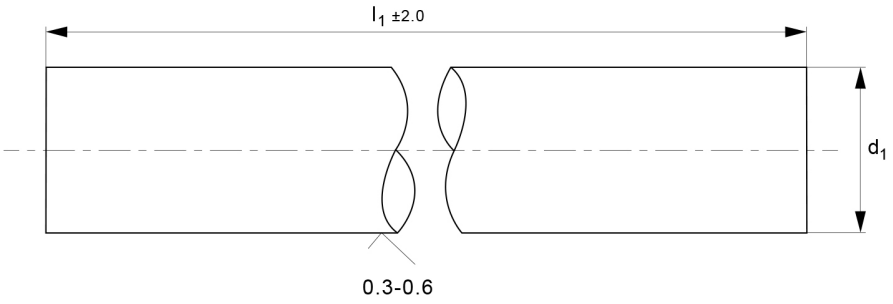



Part Number	d1 tol. h6	l1	Depth of hardness min
20306847	60.0	3450.0	1.5
20306854	60.0	3500.0	1.5
20306861	60.0	3550.0	1.5
20306878	60.0	3600.0	1.5
20306885	60.0	3650.0	1.5
20306892	60.0	3700.0	1.5
20306908	60.0	3750.0	1.5
20306915	60.0	3800.0	1.5
20306922	60.0	3850.0	1.5
20306939	60.0	3900.0	1.5
20306946	60.0	3950.0	1.5
20306953	60.0	4000.0	1.5
20306960	60.0	4050.0	1.5
20306977	60.0	4100.0	1.5
20306984	60.0	4150.0	1.5
20306991	60.0	4200.0	1.5
20307004	60.0	4250.0	1.5
20307011	60.0	4300.0	1.5
20307028	60.0	4350.0	1.5
20307035	60.0	4400.0	1.5
20307042	60.0	4450.0	1.5
20307059	60.0	4500.0	1.5
20307066	60.0	4550.0	1.5
20307073	60.0	4600.0	1.5
20307080	60.0	4650.0	1.5
20307097	60.0	4700.0	1.5

Hardened Stainless Shafts

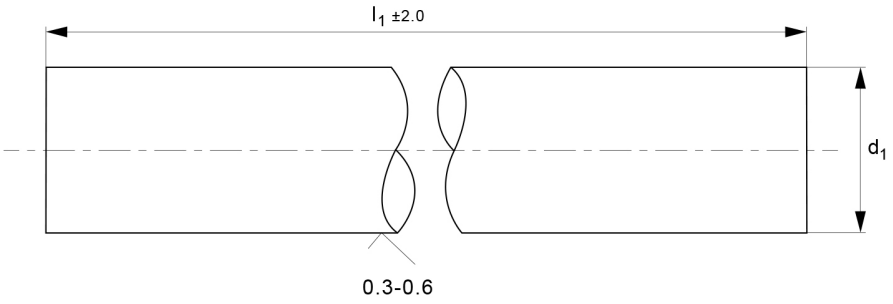



Part Number	d1 tol. h6	l1	Depth of hardness min
20307103	60.0	4750.0	1.5
20307110	60.0	4800.0	1.5
20307127	60.0	4850.0	1.5
20307134	60.0	4900.0	1.5
20307141	60.0	4950.0	1.5
20307158	60.0	5000.0	1.5
20307165	60.0	5050.0	1.5
20307172	60.0	5100.0	1.5
20307189	60.0	5150.0	1.5
20307196	60.0	5200.0	1.5
20307202	60.0	5250.0	1.5
20307219	60.0	5300.0	1.5
20307226	60.0	5350.0	1.5
20307233	60.0	5400.0	1.5
20307240	60.0	5450.0	1.5
20307257	60.0	5500.0	1.5
20307264	60.0	5550.0	1.5
20307271	60.0	5600.0	1.5
20307288	60.0	5650.0	1.5
20307295	60.0	5700.0	1.5
20307301	60.0	5750.0	1.5
20307318	60.0	5800.0	1.5
20307325	60.0	5850.0	1.5
20307332	60.0	5900.0	1.5
20307349	60.0	5950.0	1.5

Hardened Stainless Shafts

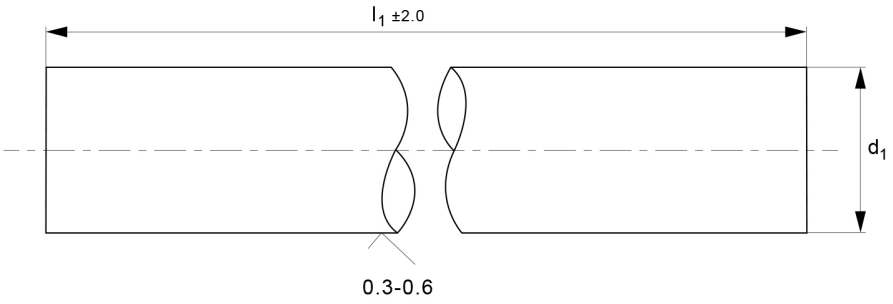



Part Number	d1 tol. h6	l1	Depth of hardness min
20307356	60.0	6000.0	1.5

Stainless AISI 303/316 Shafts

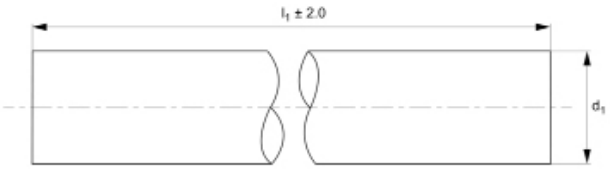



Features

- Can tolerate high humidity, chemicals, and corrosive substances.
- Ceramic bearings should be utilised instead of ball-bushing linear bearings.
- It is used in x-ray equipment, and food processing equipment.

Specifications

Material: 316 Stainless Steel, 303 Stainless Steel

Stainless AISI 303/316 Shafts are used in industries that demand high/very high corrosion resistance, strength, and durability. This guarantees that the shafts can tolerate difficult conditions such as high humidity, chemicals, high-temperature resistance, excellent weldability, and corrosive substances without affecting their structural integrity. As a result, these shafts have a longer lifespan and require less maintenance, resulting in less downtime and lower total operational expenses.

Ceramic bearings should be utilised instead of ball-bushing linear bearings. Suitable for applications involving heavy loads, high speeds, and abrasive environments.

It is used in x-ray equipment, paper processing equipment, hardware equipment, and food processing equipment.

Stainless AISI 303/316 Shafts

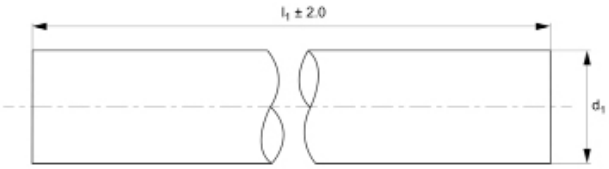



Part Number	d1	l1	Tolerance μ tol. h6	Material
20307363	6.0	100.0	+0,-8	303 Stainless Steel
20307370	6.0	150.0	+0,-8	303 Stainless Steel
20307387	6.0	200.0	+0,-8	303 Stainless Steel
20307394	6.0	250.0	+0,-8	303 Stainless Steel
20307400	6.0	300.0	+0,-8	303 Stainless Steel
20307417	6.0	350.0	+0,-8	303 Stainless Steel
20307424	6.0	400.0	+0,-8	303 Stainless Steel
20307431	6.0	450.0	+0,-8	303 Stainless Steel
20307448	6.0	500.0	+0,-8	303 Stainless Steel
20307455	6.0	550.0	+0,-8	303 Stainless Steel
20307462	6.0	600.0	+0,-8	303 Stainless Steel
20307479	6.0	650.0	+0,-8	303 Stainless Steel
20307486	6.0	700.0	+0,-8	303 Stainless Steel
20307493	6.0	750.0	+0,-8	303 Stainless Steel
20307509	6.0	800.0	+0,-8	303 Stainless Steel
20307516	6.0	850.0	+0,-8	303 Stainless Steel
20307523	6.0	900.0	+0,-8	303 Stainless Steel
20307530	6.0	950.0	+0,-8	303 Stainless Steel
20307547	6.0	1000.0	+0,-8	303 Stainless Steel
20307554	6.0	1050.0	+0,-8	303 Stainless Steel
20307561	6.0	1100.0	+0,-8	303 Stainless Steel
20307578	6.0	1150.0	+0,-8	303 Stainless Steel
20307585	6.0	1200.0	+0,-8	303 Stainless Steel
20307592	6.0	1250.0	+0,-8	303 Stainless Steel
20307608	6.0	1300.0	+0,-8	303 Stainless Steel
20307615	6.0	1350.0	+0,-8	303 Stainless Steel

Part Number	d1	l1	Tolerance μ tol. h6	Material
20307622	6.0	1400.0	+0,-8	303 Stainless Steel
20307639	6.0	1450.0	+0,-8	303 Stainless Steel
20307646	6.0	1500.0	+0,-8	303 Stainless Steel
20307653	6.0	1550.0	+0,-8	303 Stainless Steel
20307660	6.0	1600.0	+0,-8	303 Stainless Steel
20307677	6.0	1650.0	+0,-8	303 Stainless Steel
20307684	6.0	1700.0	+0,-8	303 Stainless Steel
20307691	6.0	1750.0	+0,-8	303 Stainless Steel
20307707	6.0	1800.0	+0,-8	303 Stainless Steel
20307714	6.0	1850.0	+0,-8	303 Stainless Steel
20307721	6.0	1900.0	+0,-8	303 Stainless Steel
20307738	6.0	1950.0	+0,-8	303 Stainless Steel
20307745	6.0	2000.0	+0,-8	303 Stainless Steel
20307752	6.0	2050.0	+0,-8	303 Stainless Steel
20307769	6.0	2100.0	+0,-8	303 Stainless Steel
20307776	6.0	2150.0	+0,-8	303 Stainless Steel
20307783	6.0	2200.0	+0,-8	303 Stainless Steel
20307790	6.0	2250.0	+0,-8	303 Stainless Steel
20307806	6.0	2300.0	+0,-8	303 Stainless Steel
20307813	6.0	2350.0	+0,-8	303 Stainless Steel
20307820	6.0	2400.0	+0,-8	303 Stainless Steel
20307837	6.0	2450.0	+0,-8	303 Stainless Steel
20307844	6.0	2500.0	+0,-8	303 Stainless Steel
20307851	6.0	2550.0	+0,-8	303 Stainless Steel
20307868	6.0	2600.0	+0,-8	303 Stainless Steel
20307875	6.0	2650.0	+0,-8	303 Stainless Steel

Stainless AISI 303/316 Shafts

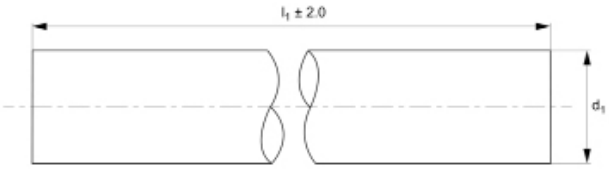



Part Number	d1	l1	Tolerance μ tol. h6	Material
20307882	6.0	2700.0	+0,-8	303 Stainless Steel
20307899	6.0	2750.0	+0,-8	303 Stainless Steel
20307905	6.0	2800.0	+0,-8	303 Stainless Steel
20307912	6.0	2850.0	+0,-8	303 Stainless Steel
20307929	6.0	2900.0	+0,-8	303 Stainless Steel
20307936	6.0	2950.0	+0,-8	303 Stainless Steel
20307943	6.0	3000.0	+0,-8	303 Stainless Steel
20307950	6.0	3050.0	+0,-8	303 Stainless Steel
20307967	6.0	3100.0	+0,-8	303 Stainless Steel
20307974	6.0	3150.0	+0,-8	303 Stainless Steel
20307981	6.0	3200.0	+0,-8	303 Stainless Steel
20307998	6.0	3250.0	+0,-8	303 Stainless Steel
20308001	6.0	3300.0	+0,-8	303 Stainless Steel
20308018	6.0	3350.0	+0,-8	303 Stainless Steel
20308025	6.0	3400.0	+0,-8	303 Stainless Steel
20308032	6.0	3450.0	+0,-8	303 Stainless Steel
20308049	6.0	3500.0	+0,-8	303 Stainless Steel
20308056	6.0	3550.0	+0,-8	303 Stainless Steel
20308063	6.0	3600.0	+0,-8	303 Stainless Steel
20308070	6.0	3650.0	+0,-8	303 Stainless Steel
20308087	6.0	3700.0	+0,-8	303 Stainless Steel
20308094	6.0	3750.0	+0,-8	303 Stainless Steel
20308100	6.0	3800.0	+0,-8	303 Stainless Steel
20308117	6.0	3850.0	+0,-8	303 Stainless Steel
20308124	6.0	3900.0	+0,-8	303 Stainless Steel
20308131	6.0	3950.0	+0,-8	303 Stainless Steel

Part Number	d1	l1	Tolerance μ tol. h6	Material
20308148	6.0	4000.0	+0,-8	303 Stainless Steel
20308155	6.0	4050.0	+0,-8	303 Stainless Steel
20308162	6.0	4100.0	+0,-8	303 Stainless Steel
20308179	6.0	4150.0	+0,-8	303 Stainless Steel
20308186	6.0	4200.0	+0,-8	303 Stainless Steel
20308193	6.0	4250.0	+0,-8	303 Stainless Steel
20308209	6.0	4300.0	+0,-8	303 Stainless Steel
20308216	6.0	4350.0	+0,-8	303 Stainless Steel
20308223	6.0	4400.0	+0,-8	303 Stainless Steel
20308230	6.0	4450.0	+0,-8	303 Stainless Steel
20308247	6.0	4500.0	+0,-8	303 Stainless Steel
20308254	6.0	4550.0	+0,-8	303 Stainless Steel
20308261	6.0	4600.0	+0,-8	303 Stainless Steel
20308278	6.0	4650.0	+0,-8	303 Stainless Steel
20308285	6.0	4700.0	+0,-8	303 Stainless Steel
20308292	6.0	4750.0	+0,-8	303 Stainless Steel
20308308	6.0	4800.0	+0,-8	303 Stainless Steel
20308315	6.0	4850.0	+0,-8	303 Stainless Steel
20308322	6.0	4900.0	+0,-8	303 Stainless Steel
20308339	6.0	4950.0	+0,-8	303 Stainless Steel
20308346	6.0	5000.0	+0,-8	303 Stainless Steel
20308353	6.0	5050.0	+0,-8	303 Stainless Steel
20308360	6.0	5100.0	+0,-8	303 Stainless Steel
20308377	6.0	5150.0	+0,-8	303 Stainless Steel
20308384	6.0	5200.0	+0,-8	303 Stainless Steel
20308391	6.0	5250.0	+0,-8	303 Stainless Steel

Stainless AISI 303/316 Shafts

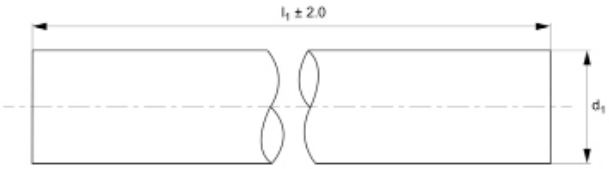



Part Number	d1	l1	Tolerance μ tol. h6	Material
20308407	6.0	5300.0	+0,-8	303 Stainless Steel
20308414	6.0	5350.0	+0,-8	303 Stainless Steel
20308421	6.0	5400.0	+0,-8	303 Stainless Steel
20308438	6.0	5450.0	+0,-8	303 Stainless Steel
20308445	6.0	5500.0	+0,-8	303 Stainless Steel
20308452	6.0	5550.0	+0,-8	303 Stainless Steel
20308469	6.0	5600.0	+0,-8	303 Stainless Steel
20308476	6.0	5650.0	+0,-8	303 Stainless Steel
20308483	6.0	5700.0	+0,-8	303 Stainless Steel
20308490	6.0	5750.0	+0,-8	303 Stainless Steel
20308506	6.0	5800.0	+0,-8	303 Stainless Steel
20308513	6.0	5850.0	+0,-8	303 Stainless Steel
20308520	6.0	5900.0	+0,-8	303 Stainless Steel
20308537	6.0	5950.0	+0,-8	303 Stainless Steel
20308544	6.0	6000.0	+0,-8	303 Stainless Steel
20308551	8.0	100.0	+0,-9	303 Stainless Steel
20308568	8.0	150.0	+0,-9	303 Stainless Steel
20308575	8.0	200.0	+0,-9	303 Stainless Steel
20308582	8.0	250.0	+0,-9	303 Stainless Steel
20308599	8.0	300.0	+0,-9	303 Stainless Steel
20308605	8.0	350.0	+0,-9	303 Stainless Steel
20308612	8.0	400.0	+0,-9	303 Stainless Steel
20308629	8.0	450.0	+0,-9	303 Stainless Steel
20308636	8.0	500.0	+0,-9	303 Stainless Steel
20308643	8.0	550.0	+0,-9	303 Stainless Steel
20308650	8.0	600.0	+0,-9	303 Stainless Steel

Part Number	d1	l1	Tolerance μ tol. h6	Material
20308667	8.0	650.0	+0,-9	303 Stainless Steel
20308674	8.0	700.0	+0,-9	303 Stainless Steel
20308681	8.0	750.0	+0,-9	303 Stainless Steel
20308698	8.0	800.0	+0,-9	303 Stainless Steel
20308704	8.0	850.0	+0,-9	303 Stainless Steel
20308711	8.0	900.0	+0,-9	303 Stainless Steel
20308728	8.0	950.0	+0,-9	303 Stainless Steel
20308735	8.0	1000.0	+0,-9	303 Stainless Steel
20308742	8.0	1050.0	+0,-9	303 Stainless Steel
20308759	8.0	1100.0	+0,-9	303 Stainless Steel
20308766	8.0	1150.0	+0,-9	303 Stainless Steel
20308773	8.0	1200.0	+0,-9	303 Stainless Steel
20308780	8.0	1250.0	+0,-9	303 Stainless Steel
20308797	8.0	1300.0	+0,-9	303 Stainless Steel
20308803	8.0	1350.0	+0,-9	303 Stainless Steel
20308810	8.0	1400.0	+0,-9	303 Stainless Steel
20308827	8.0	1450.0	+0,-9	303 Stainless Steel
20308834	8.0	1500.0	+0,-9	303 Stainless Steel
20308841	8.0	1550.0	+0,-9	303 Stainless Steel
20308858	8.0	1600.0	+0,-9	303 Stainless Steel
20308865	8.0	1650.0	+0,-9	303 Stainless Steel
20308872	8.0	1700.0	+0,-9	303 Stainless Steel
20308889	8.0	1750.0	+0,-9	303 Stainless Steel
20308896	8.0	1800.0	+0,-9	303 Stainless Steel
20308902	8.0	1850.0	+0,-9	303 Stainless Steel
20308919	8.0	1900.0	+0,-9	303 Stainless Steel

Stainless AISI 303/316 Shafts

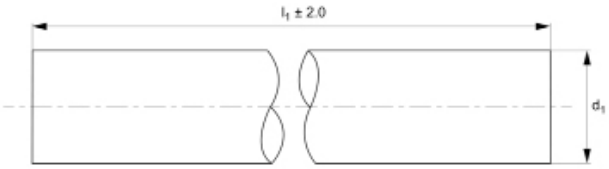



Part Number	d1	l1	Tolerance μ tol. h6	Material
20308926	8.0	1950.0	+0,-9	303 Stainless Steel
20308933	8.0	2000.0	+0,-9	303 Stainless Steel
20308940	8.0	2050.0	+0,-9	303 Stainless Steel
20308957	8.0	2100.0	+0,-9	303 Stainless Steel
20308964	8.0	2150.0	+0,-9	303 Stainless Steel
20308971	8.0	2200.0	+0,-9	303 Stainless Steel
20308988	8.0	2250.0	+0,-9	303 Stainless Steel
20308995	8.0	2300.0	+0,-9	303 Stainless Steel
20309008	8.0	2350.0	+0,-9	303 Stainless Steel
20309015	8.0	2400.0	+0,-9	303 Stainless Steel
20309022	8.0	2450.0	+0,-9	303 Stainless Steel
20309039	8.0	2500.0	+0,-9	303 Stainless Steel
20309046	8.0	2550.0	+0,-9	303 Stainless Steel
20309053	8.0	2600.0	+0,-9	303 Stainless Steel
20309060	8.0	2650.0	+0,-9	303 Stainless Steel
20309077	8.0	2700.0	+0,-9	303 Stainless Steel
20309084	8.0	2750.0	+0,-9	303 Stainless Steel
20309091	8.0	2800.0	+0,-9	303 Stainless Steel
20309107	8.0	2850.0	+0,-9	303 Stainless Steel
20309114	8.0	2900.0	+0,-9	303 Stainless Steel
20309121	8.0	2950.0	+0,-9	303 Stainless Steel
20309138	8.0	3000.0	+0,-9	303 Stainless Steel
20309145	8.0	3050.0	+0,-9	303 Stainless Steel
20309152	8.0	3100.0	+0,-9	303 Stainless Steel
20309169	8.0	3150.0	+0,-9	303 Stainless Steel
20309176	8.0	3200.0	+0,-9	303 Stainless Steel

Part Number	d1	l1	Tolerance μ tol. h6	Material
20309183	8.0	3250.0	+0,-9	303 Stainless Steel
20309190	8.0	3300.0	+0,-9	303 Stainless Steel
20309206	8.0	3350.0	+0,-9	303 Stainless Steel
20309213	8.0	3400.0	+0,-9	303 Stainless Steel
20309220	8.0	3450.0	+0,-9	303 Stainless Steel
20309237	8.0	3500.0	+0,-9	303 Stainless Steel
20309244	8.0	3550.0	+0,-9	303 Stainless Steel
20309251	8.0	3600.0	+0,-9	303 Stainless Steel
20309268	8.0	3650.0	+0,-9	303 Stainless Steel
20309275	8.0	3700.0	+0,-9	303 Stainless Steel
20309282	8.0	3750.0	+0,-9	303 Stainless Steel
20309299	8.0	3800.0	+0,-9	303 Stainless Steel
20309305	8.0	3850.0	+0,-9	303 Stainless Steel
20309312	8.0	3900.0	+0,-9	303 Stainless Steel
20309329	8.0	3950.0	+0,-9	303 Stainless Steel
20309336	8.0	4000.0	+0,-9	303 Stainless Steel
20309343	8.0	4050.0	+0,-9	303 Stainless Steel
20309350	8.0	4100.0	+0,-9	303 Stainless Steel
20309367	8.0	4150.0	+0,-9	303 Stainless Steel
20309374	8.0	4200.0	+0,-9	303 Stainless Steel
20309381	8.0	4250.0	+0,-9	303 Stainless Steel
20309398	8.0	4300.0	+0,-9	303 Stainless Steel
20309404	8.0	4350.0	+0,-9	303 Stainless Steel
20309411	8.0	4400.0	+0,-9	303 Stainless Steel
20309428	8.0	4450.0	+0,-9	303 Stainless Steel
20309435	8.0	4500.0	+0,-9	303 Stainless Steel

Stainless AISI 303/316 Shafts

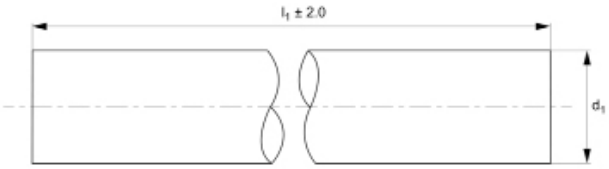



Part Number	d1	l1	Tolerance μ tol. h6	Material
20309442	8.0	4550.0	+0,-9	303 Stainless Steel
20309459	8.0	4600.0	+0,-9	303 Stainless Steel
20309466	8.0	4650.0	+0,-9	303 Stainless Steel
20309473	8.0	4700.0	+0,-9	303 Stainless Steel
20309480	8.0	4750.0	+0,-9	303 Stainless Steel
20309497	8.0	4800.0	+0,-9	303 Stainless Steel
20309503	8.0	4850.0	+0,-9	303 Stainless Steel
20309510	8.0	4900.0	+0,-9	303 Stainless Steel
20309527	8.0	4950.0	+0,-9	303 Stainless Steel
20309534	8.0	5000.0	+0,-9	303 Stainless Steel
20309541	8.0	5050.0	+0,-9	303 Stainless Steel
20309558	8.0	5100.0	+0,-9	303 Stainless Steel
20309565	8.0	5150.0	+0,-9	303 Stainless Steel
20309572	8.0	5200.0	+0,-9	303 Stainless Steel
20309589	8.0	5250.0	+0,-9	303 Stainless Steel
20309596	8.0	5300.0	+0,-9	303 Stainless Steel
20309602	8.0	5350.0	+0,-9	303 Stainless Steel
20309619	8.0	5400.0	+0,-9	303 Stainless Steel
20309626	8.0	5450.0	+0,-9	303 Stainless Steel
20309633	8.0	5500.0	+0,-9	303 Stainless Steel
20309640	8.0	5550.0	+0,-9	303 Stainless Steel
20309657	8.0	5600.0	+0,-9	303 Stainless Steel
20309664	8.0	5650.0	+0,-9	303 Stainless Steel
20309671	8.0	5700.0	+0,-9	303 Stainless Steel
20309688	8.0	5750.0	+0,-9	303 Stainless Steel
20309695	8.0	5800.0	+0,-9	303 Stainless Steel

Part Number	d1	l1	Tolerance μ tol. h6	Material
20309701	8.0	5850.0	+0,-9	303 Stainless Steel
20309718	8.0	5900.0	+0,-9	303 Stainless Steel
20309725	8.0	5950.0	+0,-9	303 Stainless Steel
20309732	8.0	6000.0	+0,-9	303 Stainless Steel
20309749	10.0	100.0	+0,-10	303 Stainless Steel
20309756	10.0	150.0	+0,-10	303 Stainless Steel
20309763	10.0	200.0	+0,-10	303 Stainless Steel
20309770	10.0	250.0	+0,-10	303 Stainless Steel
20309787	10.0	300.0	+0,-10	303 Stainless Steel
20309794	10.0	350.0	+0,-10	303 Stainless Steel
20309800	10.0	400.0	+0,-10	303 Stainless Steel
20309817	10.0	450.0	+0,-10	303 Stainless Steel
20309824	10.0	500.0	+0,-10	303 Stainless Steel
20309831	10.0	550.0	+0,-10	303 Stainless Steel
20309848	10.0	600.0	+0,-10	303 Stainless Steel
20309855	10.0	650.0	+0,-10	303 Stainless Steel
20309862	10.0	700.0	+0,-10	303 Stainless Steel
20309879	10.0	750.0	+0,-10	303 Stainless Steel
20309886	10.0	800.0	+0,-10	303 Stainless Steel
20309893	10.0	850.0	+0,-10	303 Stainless Steel
20309909	10.0	900.0	+0,-10	303 Stainless Steel
20309916	10.0	950.0	+0,-10	303 Stainless Steel
20309923	10.0	1000.0	+0,-10	303 Stainless Steel
20309930	10.0	1050.0	+0,-10	303 Stainless Steel
20309947	10.0	1100.0	+0,-10	303 Stainless Steel
20309954	10.0	1150.0	+0,-10	303 Stainless Steel

Stainless AISI 303/316 Shafts

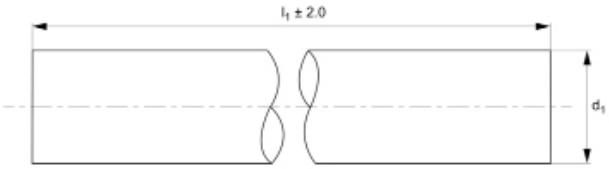



Part Number	d1	l1	Tolerance μ tol. h6	Material
20309961	10.0	1200.0	+0,-10	303 Stainless Steel
20309978	10.0	1250.0	+0,-10	303 Stainless Steel
20309985	10.0	1300.0	+0,-10	303 Stainless Steel
20309992	10.0	1350.0	+0,-10	303 Stainless Steel
20310004	10.0	1400.0	+0,-10	303 Stainless Steel
20310011	10.0	1450.0	+0,-10	303 Stainless Steel
20310028	10.0	1500.0	+0,-10	303 Stainless Steel
20310035	10.0	1550.0	+0,-10	303 Stainless Steel
20310042	10.0	1600.0	+0,-10	303 Stainless Steel
20310059	10.0	1650.0	+0,-10	303 Stainless Steel
20310066	10.0	1700.0	+0,-10	303 Stainless Steel
20310073	10.0	1750.0	+0,-10	303 Stainless Steel
20310080	10.0	1800.0	+0,-10	303 Stainless Steel
20310097	10.0	1850.0	+0,-10	303 Stainless Steel
20310103	10.0	1900.0	+0,-10	303 Stainless Steel
20310110	10.0	1950.0	+0,-10	303 Stainless Steel
20310127	10.0	2000.0	+0,-10	303 Stainless Steel
20310134	10.0	2050.0	+0,-10	303 Stainless Steel
20310141	10.0	2100.0	+0,-10	303 Stainless Steel
20310158	10.0	2150.0	+0,-10	303 Stainless Steel
20310165	10.0	2200.0	+0,-10	303 Stainless Steel
20310172	10.0	2250.0	+0,-10	303 Stainless Steel
20310189	10.0	2300.0	+0,-10	303 Stainless Steel
20310196	10.0	2350.0	+0,-10	303 Stainless Steel
20310202	10.0	2400.0	+0,-10	303 Stainless Steel
20310219	10.0	2450.0	+0,-10	303 Stainless Steel

Part Number	d1	l1	Tolerance μ tol. h6	Material
20310226	10.0	2500.0	+0,-10	303 Stainless Steel
20310233	10.0	2550.0	+0,-10	303 Stainless Steel
20310240	10.0	2600.0	+0,-10	303 Stainless Steel
20310257	10.0	2650.0	+0,-10	303 Stainless Steel
20310264	10.0	2700.0	+0,-10	303 Stainless Steel
20310271	10.0	2750.0	+0,-10	303 Stainless Steel
20310288	10.0	2800.0	+0,-10	303 Stainless Steel
20310295	10.0	2850.0	+0,-10	303 Stainless Steel
20310301	10.0	2900.0	+0,-10	303 Stainless Steel
20310318	10.0	2950.0	+0,-10	303 Stainless Steel
20310325	10.0	3000.0	+0,-10	303 Stainless Steel
20310332	10.0	3050.0	+0,-10	303 Stainless Steel
20310349	10.0	3100.0	+0,-10	303 Stainless Steel
20310356	10.0	3150.0	+0,-10	303 Stainless Steel
20310363	10.0	3200.0	+0,-10	303 Stainless Steel
20310370	10.0	3250.0	+0,-10	303 Stainless Steel
20310387	10.0	3300.0	+0,-10	303 Stainless Steel
20310394	10.0	3350.0	+0,-10	303 Stainless Steel
20310400	10.0	3400.0	+0,-10	303 Stainless Steel
20310417	10.0	3450.0	+0,-10	303 Stainless Steel
20310424	10.0	3500.0	+0,-10	303 Stainless Steel
20310431	10.0	3550.0	+0,-10	303 Stainless Steel
20310448	10.0	3600.0	+0,-10	303 Stainless Steel
20310455	10.0	3650.0	+0,-10	303 Stainless Steel
20310462	10.0	3700.0	+0,-10	303 Stainless Steel
20310479	10.0	3750.0	+0,-10	303 Stainless Steel

Stainless AISI 303/316 Shafts

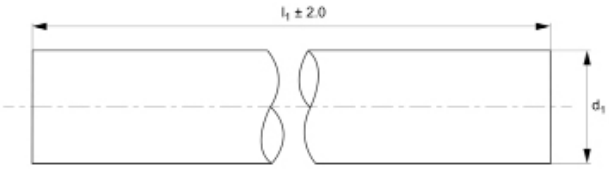



Part Number	d1	l1	Tolerance μ tol. h6	Material
20310486	10.0	3800.0	+0,-10	303 Stainless Steel
20310493	10.0	3850.0	+0,-10	303 Stainless Steel
20310509	10.0	3900.0	+0,-10	303 Stainless Steel
20310516	10.0	3950.0	+0,-10	303 Stainless Steel
20310523	10.0	4000.0	+0,-10	303 Stainless Steel
20310530	10.0	4050.0	+0,-10	303 Stainless Steel
20310547	10.0	4100.0	+0,-10	303 Stainless Steel
20310554	10.0	4150.0	+0,-10	303 Stainless Steel
20310561	10.0	4200.0	+0,-10	303 Stainless Steel
20310578	10.0	4250.0	+0,-10	303 Stainless Steel
20310585	10.0	4300.0	+0,-10	303 Stainless Steel
20310592	10.0	4350.0	+0,-10	303 Stainless Steel
20310608	10.0	4400.0	+0,-10	303 Stainless Steel
20310615	10.0	4450.0	+0,-10	303 Stainless Steel
20310622	10.0	4500.0	+0,-10	303 Stainless Steel
20310639	10.0	4550.0	+0,-10	303 Stainless Steel
20310646	10.0	4600.0	+0,-10	303 Stainless Steel
20310653	10.0	4650.0	+0,-10	303 Stainless Steel
20310660	10.0	4700.0	+0,-10	303 Stainless Steel
20310677	10.0	4750.0	+0,-10	303 Stainless Steel
20310684	10.0	4800.0	+0,-10	303 Stainless Steel
20310691	10.0	4850.0	+0,-10	303 Stainless Steel
20310707	10.0	4900.0	+0,-10	303 Stainless Steel
20310714	10.0	4950.0	+0,-10	303 Stainless Steel
20310721	10.0	5000.0	+0,-10	303 Stainless Steel
20310738	10.0	5050.0	+0,-10	303 Stainless Steel

Part Number	d1	l1	Tolerance μ tol. h6	Material
20310745	10.0	5100.0	+0,-10	303 Stainless Steel
20310752	10.0	5150.0	+0,-10	303 Stainless Steel
20310769	10.0	5200.0	+0,-10	303 Stainless Steel
20310776	10.0	5250.0	+0,-10	303 Stainless Steel
20310783	10.0	5300.0	+0,-10	303 Stainless Steel
20310790	10.0	5350.0	+0,-10	303 Stainless Steel
20310806	10.0	5400.0	+0,-10	303 Stainless Steel
20310813	10.0	5450.0	+0,-10	303 Stainless Steel
20310820	10.0	5500.0	+0,-10	303 Stainless Steel
20310837	10.0	5550.0	+0,-10	303 Stainless Steel
20310844	10.0	5600.0	+0,-10	303 Stainless Steel
20310851	10.0	5650.0	+0,-10	303 Stainless Steel
20310868	10.0	5700.0	+0,-10	303 Stainless Steel
20310875	10.0	5750.0	+0,-10	303 Stainless Steel
20310882	10.0	5800.0	+0,-10	303 Stainless Steel
20310899	10.0	5850.0	+0,-10	303 Stainless Steel
20310905	10.0	5900.0	+0,-10	303 Stainless Steel
20310912	10.0	5950.0	+0,-10	303 Stainless Steel
20310929	10.0	6000.0	+0,-10	303 Stainless Steel
20310936	12.0	100.0	0.6	303 Stainless Steel
20310943	12.0	150.0	0.6	303 Stainless Steel
20310950	12.0	200.0	0.6	303 Stainless Steel
20310967	12.0	250.0	0.6	303 Stainless Steel
20310974	12.0	300.0	0.6	303 Stainless Steel
20310981	12.0	350.0	0.6	303 Stainless Steel
20310998	12.0	400.0	0.6	303 Stainless Steel

Stainless AISI 303/316 Shafts

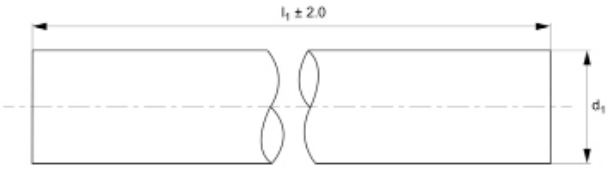



Part Number	d1	l1	Tolerance μ tol. h6	Material
20311001	12.0	450.0	0.6	303 Stainless Steel
20311018	12.0	500.0	0.6	303 Stainless Steel
20311025	12.0	550.0	0.6	303 Stainless Steel
20311032	12.0	600.0	0.6	303 Stainless Steel
20311049	12.0	650.0	0.6	303 Stainless Steel
20311056	12.0	700.0	0.6	303 Stainless Steel
20311063	12.0	750.0	0.6	303 Stainless Steel
20311070	12.0	800.0	0.6	303 Stainless Steel
20311087	12.0	850.0	0.6	303 Stainless Steel
20311094	12.0	900.0	0.6	303 Stainless Steel
20311100	12.0	950.0	0.6	303 Stainless Steel
20311117	12.0	1000.0	0.6	303 Stainless Steel
20311124	12.0	1050.0	0.6	303 Stainless Steel
20311131	12.0	1100.0	0.6	303 Stainless Steel
20311148	12.0	1150.0	0.6	303 Stainless Steel
20311155	12.0	1200.0	0.6	303 Stainless Steel
20311162	12.0	1250.0	0.6	303 Stainless Steel
20311179	12.0	1300.0	0.6	303 Stainless Steel
20311186	12.0	1350.0	0.6	303 Stainless Steel
20311193	12.0	1400.0	0.6	303 Stainless Steel
20311209	12.0	1450.0	0.6	303 Stainless Steel
20311216	12.0	1500.0	0.6	303 Stainless Steel
20311223	12.0	1550.0	0.6	303 Stainless Steel
20311230	12.0	1600.0	0.6	303 Stainless Steel
20311247	12.0	1650.0	0.6	303 Stainless Steel
20311254	12.0	1700.0	0.6	303 Stainless Steel

Part Number	d1	l1	Tolerance μ tol. h6	Material
20311261	12.0	1750.0	0.6	303 Stainless Steel
20311278	12.0	1800.0	0.6	303 Stainless Steel
20311285	12.0	1850.0	0.6	303 Stainless Steel
20311292	12.0	1900.0	0.6	303 Stainless Steel
20311308	12.0	1950.0	0.6	303 Stainless Steel
20311315	12.0	2000.0	0.6	303 Stainless Steel
20311322	12.0	2050.0	0.6	303 Stainless Steel
20311339	12.0	2100.0	0.6	303 Stainless Steel
20311346	12.0	2150.0	0.6	303 Stainless Steel
20311353	12.0	2200.0	0.6	303 Stainless Steel
20311360	12.0	2250.0	0.6	303 Stainless Steel
20311377	12.0	2300.0	0.6	303 Stainless Steel
20311384	12.0	2350.0	0.6	303 Stainless Steel
20311391	12.0	2400.0	0.6	303 Stainless Steel
20311407	12.0	2450.0	0.6	303 Stainless Steel
20311414	12.0	2500.0	0.6	303 Stainless Steel
20311421	12.0	2550.0	0.6	303 Stainless Steel
20311438	12.0	2600.0	0.6	303 Stainless Steel
20311445	12.0	2650.0	0.6	303 Stainless Steel
20311452	12.0	2700.0	0.6	303 Stainless Steel
20311469	12.0	2750.0	0.6	303 Stainless Steel
20311476	12.0	2800.0	0.6	303 Stainless Steel
20311483	12.0	2850.0	0.6	303 Stainless Steel
20311490	12.0	2900.0	0.6	303 Stainless Steel
20311506	12.0	2950.0	0.6	303 Stainless Steel
20311513	12.0	3000.0	0.6	303 Stainless Steel

Stainless AISI 303/316 Shafts

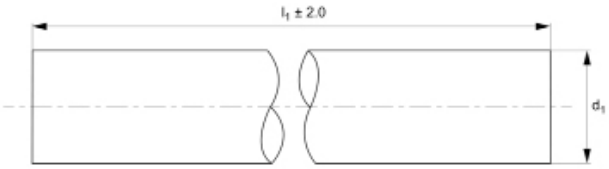



Part Number	d1	l1	Tolerance μ tol. h6	Material
20311520	12.0	3050.0	0.6	303 Stainless Steel
20311537	12.0	3100.0	0.6	303 Stainless Steel
20311544	12.0	3150.0	0.6	303 Stainless Steel
20311551	12.0	3200.0	0.6	303 Stainless Steel
20311568	12.0	3250.0	0.6	303 Stainless Steel
20311575	12.0	3300.0	0.6	303 Stainless Steel
20311582	12.0	3350.0	0.6	303 Stainless Steel
20311599	12.0	3400.0	0.6	303 Stainless Steel
20311605	12.0	3450.0	0.6	303 Stainless Steel
20311612	12.0	3500.0	0.6	303 Stainless Steel
20311629	12.0	3550.0	0.6	303 Stainless Steel
20311636	12.0	3600.0	0.6	303 Stainless Steel
20311643	12.0	3650.0	0.6	303 Stainless Steel
20311650	12.0	3700.0	0.6	303 Stainless Steel
20311667	12.0	3750.0	0.6	303 Stainless Steel
20311674	12.0	3800.0	0.6	303 Stainless Steel
20311681	12.0	3850.0	0.6	303 Stainless Steel
20311698	12.0	3900.0	0.6	303 Stainless Steel
20311704	12.0	3950.0	0.6	303 Stainless Steel
20311711	12.0	4000.0	0.6	303 Stainless Steel
20311728	12.0	4050.0	0.6	303 Stainless Steel
20311735	12.0	4100.0	0.6	303 Stainless Steel
20311742	12.0	4150.0	0.6	303 Stainless Steel
20311759	12.0	4200.0	0.6	303 Stainless Steel
20311766	12.0	4250.0	0.6	303 Stainless Steel
20311773	12.0	4300.0	0.6	303 Stainless Steel

Part Number	d1	l1	Tolerance μ tol. h6	Material
20311780	12.0	4350.0	0.6	303 Stainless Steel
20311797	12.0	4400.0	0.6	303 Stainless Steel
20311803	12.0	4450.0	0.6	303 Stainless Steel
20311810	12.0	4500.0	0.6	303 Stainless Steel
20311827	12.0	4550.0	0.6	303 Stainless Steel
20311834	12.0	4600.0	0.6	303 Stainless Steel
20311841	12.0	4650.0	0.6	303 Stainless Steel
20311858	12.0	4700.0	0.6	303 Stainless Steel
20311865	12.0	4750.0	0.6	303 Stainless Steel
20311872	12.0	4800.0	0.6	303 Stainless Steel
20311889	12.0	4850.0	0.6	303 Stainless Steel
20311896	12.0	4900.0	0.6	303 Stainless Steel
20311902	12.0	4950.0	0.6	303 Stainless Steel
20311919	12.0	5000.0	0.6	303 Stainless Steel
20311926	12.0	5050.0	0.6	303 Stainless Steel
20311933	12.0	5100.0	0.6	303 Stainless Steel
20311940	12.0	5150.0	0.6	303 Stainless Steel
20311957	12.0	5200.0	0.6	303 Stainless Steel
20311964	12.0	5250.0	0.6	303 Stainless Steel
20311971	12.0	5300.0	0.6	303 Stainless Steel
20311988	12.0	5350.0	0.6	303 Stainless Steel
20311995	12.0	5400.0	0.6	303 Stainless Steel
20312008	12.0	5450.0	0.6	303 Stainless Steel
20312015	12.0	5500.0	0.6	303 Stainless Steel
20312022	12.0	5550.0	0.6	303 Stainless Steel
20312039	12.0	5600.0	0.6	303 Stainless Steel

Stainless AISI 303/316 Shafts

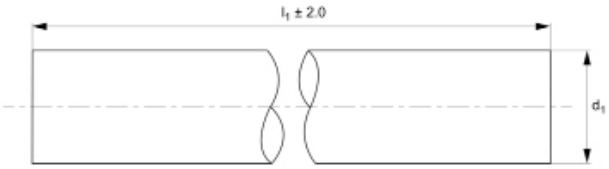



Part Number	d1	l1	Tolerance μ tol. h6	Material
20312046	12.0	5650.0	0.6	303 Stainless Steel
20312053	12.0	5700.0	0.6	303 Stainless Steel
20312060	12.0	5750.0	0.6	303 Stainless Steel
20312077	12.0	5800.0	0.6	303 Stainless Steel
20312084	12.0	5850.0	0.6	303 Stainless Steel
20312091	12.0	5900.0	0.6	303 Stainless Steel
20312107	12.0	5950.0	0.6	303 Stainless Steel
20312114	12.0	6000.0	0.6	303 Stainless Steel
20312121	16.0	100.0	0.6	303 Stainless Steel
20312138	16.0	150.0	0.6	303 Stainless Steel
20312145	16.0	200.0	0.6	303 Stainless Steel
20312152	16.0	250.0	0.6	303 Stainless Steel
20312169	16.0	300.0	0.6	303 Stainless Steel
20312176	16.0	350.0	0.6	303 Stainless Steel
20312183	16.0	400.0	0.6	303 Stainless Steel
20312190	16.0	450.0	0.6	303 Stainless Steel
20312206	16.0	500.0	0.6	303 Stainless Steel
20312213	16.0	550.0	0.6	303 Stainless Steel
20312220	16.0	600.0	0.6	303 Stainless Steel
20312237	16.0	650.0	0.6	303 Stainless Steel
20312244	16.0	700.0	0.6	303 Stainless Steel
20312251	16.0	750.0	0.6	303 Stainless Steel
20312268	16.0	800.0	0.6	303 Stainless Steel
20312275	16.0	850.0	0.6	303 Stainless Steel
20312282	16.0	900.0	0.6	303 Stainless Steel
20312299	16.0	950.0	0.6	303 Stainless Steel

Part Number	d1	l1	Tolerance μ tol. h6	Material
20312305	16.0	1000.0	0.6	303 Stainless Steel
20312312	16.0	1050.0	0.6	303 Stainless Steel
20312329	16.0	1100.0	0.6	303 Stainless Steel
20312336	16.0	1150.0	0.6	303 Stainless Steel
20312343	16.0	1200.0	0.6	303 Stainless Steel
20312350	16.0	1250.0	0.6	303 Stainless Steel
20312367	16.0	1300.0	0.6	303 Stainless Steel
20312374	16.0	1350.0	0.6	303 Stainless Steel
20312381	16.0	1400.0	0.6	303 Stainless Steel
20312398	16.0	1450.0	0.6	303 Stainless Steel
20312404	16.0	1500.0	0.6	303 Stainless Steel
20312411	16.0	1550.0	0.6	303 Stainless Steel
20312428	16.0	1600.0	0.6	303 Stainless Steel
20312435	16.0	1650.0	0.6	303 Stainless Steel
20312442	16.0	1700.0	0.6	303 Stainless Steel
20312459	16.0	1750.0	0.6	303 Stainless Steel
20312466	16.0	1800.0	0.6	303 Stainless Steel
20312473	16.0	1850.0	0.6	303 Stainless Steel
20312480	16.0	1900.0	0.6	303 Stainless Steel
20312497	16.0	1950.0	0.6	303 Stainless Steel
20312503	16.0	2000.0	0.6	303 Stainless Steel
20312510	16.0	2050.0	0.6	303 Stainless Steel
20312527	16.0	2100.0	0.6	303 Stainless Steel
20312534	16.0	2150.0	0.6	303 Stainless Steel
20312541	16.0	2200.0	0.6	303 Stainless Steel
20312558	16.0	2250.0	0.6	303 Stainless Steel

Stainless AISI 303/316 Shafts

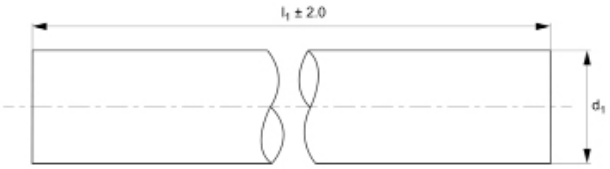



Part Number	d1	l1	Tolerance μ tol. h6	Material
20312565	16.0	2300.0	0.6	303 Stainless Steel
20312572	16.0	2350.0	0.6	303 Stainless Steel
20312589	16.0	2400.0	0.6	303 Stainless Steel
20312596	16.0	2450.0	0.6	303 Stainless Steel
20312602	16.0	2500.0	0.6	303 Stainless Steel
20312619	16.0	2550.0	0.6	303 Stainless Steel
20312626	16.0	2600.0	0.6	303 Stainless Steel
20312633	16.0	2650.0	0.6	303 Stainless Steel
20312640	16.0	2700.0	0.6	303 Stainless Steel
20312657	16.0	2750.0	0.6	303 Stainless Steel
20312664	16.0	2800.0	0.6	303 Stainless Steel
20312671	16.0	2850.0	0.6	303 Stainless Steel
20312688	16.0	2900.0	0.6	303 Stainless Steel
20312695	16.0	2950.0	0.6	303 Stainless Steel
20312701	16.0	3000.0	0.6	303 Stainless Steel
20312718	16.0	3050.0	0.6	303 Stainless Steel
20312725	16.0	3100.0	0.6	303 Stainless Steel
20312732	16.0	3150.0	0.6	303 Stainless Steel
20312749	16.0	3200.0	0.6	303 Stainless Steel
20312756	16.0	3250.0	0.6	303 Stainless Steel
20312763	16.0	3300.0	0.6	303 Stainless Steel
20312770	16.0	3350.0	0.6	303 Stainless Steel
20312787	16.0	3400.0	0.6	303 Stainless Steel
20312794	16.0	3450.0	0.6	303 Stainless Steel
20312800	16.0	3500.0	0.6	303 Stainless Steel
20312817	16.0	3550.0	0.6	303 Stainless Steel

Part Number	d1	l1	Tolerance μ tol. h6	Material
20312824	16.0	3600.0	0.6	303 Stainless Steel
20312831	16.0	3650.0	0.6	303 Stainless Steel
20312848	16.0	3700.0	0.6	303 Stainless Steel
20312855	16.0	3750.0	0.6	303 Stainless Steel
20312862	16.0	3800.0	0.6	303 Stainless Steel
20312879	16.0	3850.0	0.6	303 Stainless Steel
20312886	16.0	3900.0	0.6	303 Stainless Steel
20312893	16.0	3950.0	0.6	303 Stainless Steel
20312909	16.0	4000.0	0.6	303 Stainless Steel
20312916	16.0	4050.0	0.6	303 Stainless Steel
20312923	16.0	4100.0	0.6	303 Stainless Steel
20312930	16.0	4150.0	0.6	303 Stainless Steel
20312947	16.0	4200.0	0.6	303 Stainless Steel
20312954	16.0	4250.0	0.6	303 Stainless Steel
20312961	16.0	4300.0	0.6	303 Stainless Steel
20312978	16.0	4350.0	0.6	303 Stainless Steel
20312985	16.0	4400.0	0.6	303 Stainless Steel
20312992	16.0	4450.0	0.6	303 Stainless Steel
20313005	16.0	4500.0	0.6	303 Stainless Steel
20313012	16.0	4550.0	0.6	303 Stainless Steel
20313029	16.0	4600.0	0.6	303 Stainless Steel
20313036	16.0	4650.0	0.6	303 Stainless Steel
20313043	16.0	4700.0	0.6	303 Stainless Steel
20313050	16.0	4750.0	0.6	303 Stainless Steel
20313067	16.0	4800.0	0.6	303 Stainless Steel
20313074	16.0	4850.0	0.6	303 Stainless Steel

Stainless AISI 303/316 Shafts

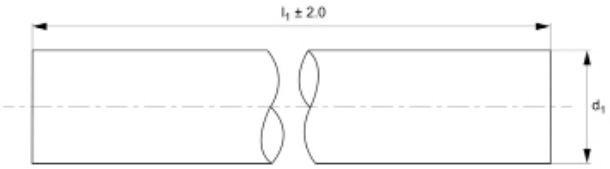



Part Number	d1	l1	Tolerance μ tol. h6	Material
20313081	16.0	4900.0	0.6	303 Stainless Steel
20313098	16.0	4950.0	0.6	303 Stainless Steel
20313104	16.0	5000.0	0.6	303 Stainless Steel
20313111	16.0	5050.0	0.6	303 Stainless Steel
20313128	16.0	5100.0	0.6	303 Stainless Steel
20313135	16.0	5150.0	0.6	303 Stainless Steel
20313142	16.0	5200.0	0.6	303 Stainless Steel
20313159	16.0	5250.0	0.6	303 Stainless Steel
20313166	16.0	5300.0	0.6	303 Stainless Steel
20313173	16.0	5350.0	0.6	303 Stainless Steel
20313180	16.0	5400.0	0.6	303 Stainless Steel
20313197	16.0	5450.0	0.6	303 Stainless Steel
20313203	16.0	5500.0	0.6	303 Stainless Steel
20313210	16.0	5550.0	0.6	303 Stainless Steel
20313227	16.0	5600.0	0.6	303 Stainless Steel
20313234	16.0	5650.0	0.6	303 Stainless Steel
20313241	16.0	5700.0	0.6	303 Stainless Steel
20313258	16.0	5750.0	0.6	303 Stainless Steel
20313265	16.0	5800.0	0.6	303 Stainless Steel
20313272	16.0	5850.0	0.6	303 Stainless Steel
20313289	16.0	5900.0	0.6	303 Stainless Steel
20313296	16.0	5950.0	0.6	303 Stainless Steel
20313302	16.0	6000.0	0.6	303 Stainless Steel
20313319	20.0	100.0	+0,-13	303 Stainless Steel
20313326	20.0	150.0	+0,-13	303 Stainless Steel
20313333	20.0	200.0	+0,-13	303 Stainless Steel

Part Number	d1	l1	Tolerance μ tol. h6	Material
20313340	20.0	250.0	+0,-13	303 Stainless Steel
20313357	20.0	300.0	+0,-13	303 Stainless Steel
20313364	20.0	350.0	+0,-13	303 Stainless Steel
20313371	20.0	400.0	+0,-13	303 Stainless Steel
20313388	20.0	450.0	+0,-13	303 Stainless Steel
20313395	20.0	500.0	+0,-13	303 Stainless Steel
20313401	20.0	550.0	+0,-13	303 Stainless Steel
20313418	20.0	600.0	+0,-13	303 Stainless Steel
20313425	20.0	650.0	+0,-13	303 Stainless Steel
20313432	20.0	700.0	+0,-13	303 Stainless Steel
20313449	20.0	750.0	+0,-13	303 Stainless Steel
20313456	20.0	800.0	+0,-13	303 Stainless Steel
20313463	20.0	850.0	+0,-13	303 Stainless Steel
20313470	20.0	900.0	+0,-13	303 Stainless Steel
20313487	20.0	950.0	+0,-13	303 Stainless Steel
20313494	20.0	1000.0	+0,-13	303 Stainless Steel
20313500	20.0	1050.0	+0,-13	303 Stainless Steel
20313517	20.0	1100.0	+0,-13	303 Stainless Steel
20313524	20.0	1150.0	+0,-13	303 Stainless Steel
20313531	20.0	1200.0	+0,-13	303 Stainless Steel
20313548	20.0	1250.0	+0,-13	303 Stainless Steel
20313555	20.0	1300.0	+0,-13	303 Stainless Steel
20313562	20.0	1350.0	+0,-13	303 Stainless Steel
20313579	20.0	1400.0	+0,-13	303 Stainless Steel
20313586	20.0	1450.0	+0,-13	303 Stainless Steel
20313593	20.0	1500.0	+0,-13	303 Stainless Steel

Stainless AISI 303/316 Shafts

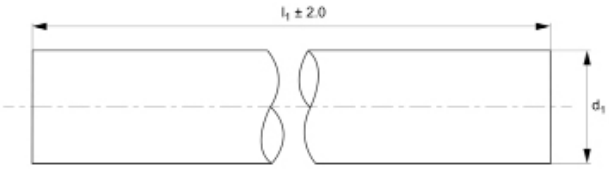



Part Number	d1	l1	Tolerance μ tol. h6	Material
20313609	20.0	1550.0	+0,-13	303 Stainless Steel
20313616	20.0	1600.0	+0,-13	303 Stainless Steel
20313623	20.0	1650.0	+0,-13	303 Stainless Steel
20313630	20.0	1700.0	+0,-13	303 Stainless Steel
20313647	20.0	1750.0	+0,-13	303 Stainless Steel
20313654	20.0	1800.0	+0,-13	303 Stainless Steel
20313661	20.0	1850.0	+0,-13	303 Stainless Steel
20313678	20.0	1900.0	+0,-13	303 Stainless Steel
20313685	20.0	1950.0	+0,-13	303 Stainless Steel
20313692	20.0	2000.0	+0,-13	303 Stainless Steel
20313708	20.0	2050.0	+0,-13	303 Stainless Steel
20313715	20.0	2100.0	+0,-13	303 Stainless Steel
20313722	20.0	2150.0	+0,-13	303 Stainless Steel
20313739	20.0	2200.0	+0,-13	303 Stainless Steel
20313746	20.0	2250.0	+0,-13	303 Stainless Steel
20313753	20.0	2300.0	+0,-13	303 Stainless Steel
20313760	20.0	2350.0	+0,-13	303 Stainless Steel
20313777	20.0	2400.0	+0,-13	303 Stainless Steel
20313784	20.0	2450.0	+0,-13	303 Stainless Steel
20313791	20.0	2500.0	+0,-13	303 Stainless Steel
20313807	20.0	2550.0	+0,-13	303 Stainless Steel
20313814	20.0	2600.0	+0,-13	303 Stainless Steel
20313821	20.0	2650.0	+0,-13	303 Stainless Steel
20313838	20.0	2700.0	+0,-13	303 Stainless Steel
20313845	20.0	2750.0	+0,-13	303 Stainless Steel
20313852	20.0	2800.0	+0,-13	303 Stainless Steel

Part Number	d1	l1	Tolerance μ tol. h6	Material
20313869	20.0	2850.0	+0,-13	303 Stainless Steel
20313876	20.0	2900.0	+0,-13	303 Stainless Steel
20313883	20.0	2950.0	+0,-13	303 Stainless Steel
20313890	20.0	3000.0	+0,-13	303 Stainless Steel
20313906	20.0	3050.0	+0,-13	303 Stainless Steel
20313913	20.0	3100.0	+0,-13	303 Stainless Steel
20313920	20.0	3150.0	+0,-13	303 Stainless Steel
20313937	20.0	3200.0	+0,-13	303 Stainless Steel
20313944	20.0	3250.0	+0,-13	303 Stainless Steel
20313951	20.0	3300.0	+0,-13	303 Stainless Steel
20313968	20.0	3350.0	+0,-13	303 Stainless Steel
20313975	20.0	3400.0	+0,-13	303 Stainless Steel
20313982	20.0	3450.0	+0,-13	303 Stainless Steel
20313999	20.0	3500.0	+0,-13	303 Stainless Steel
20314002	20.0	3550.0	+0,-13	303 Stainless Steel
20314019	20.0	3600.0	+0,-13	303 Stainless Steel
20314026	20.0	3650.0	+0,-13	303 Stainless Steel
20314033	20.0	3700.0	+0,-13	303 Stainless Steel
20314040	20.0	3750.0	+0,-13	303 Stainless Steel
20314057	20.0	3800.0	+0,-13	303 Stainless Steel
20314064	20.0	3850.0	+0,-13	303 Stainless Steel
20314071	20.0	3900.0	+0,-13	303 Stainless Steel
20314088	20.0	3950.0	+0,-13	303 Stainless Steel
20314095	20.0	4000.0	+0,-13	303 Stainless Steel
20314101	20.0	4050.0	+0,-13	303 Stainless Steel
20314118	20.0	4100.0	+0,-13	303 Stainless Steel

Stainless AISI 303/316 Shafts

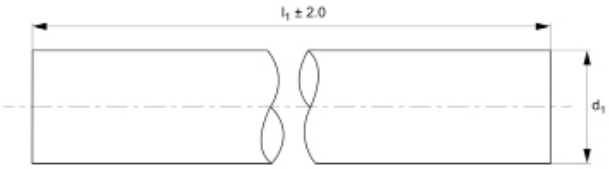



Part Number	d1	l1	Tolerance μ tol. h6	Material
20314125	20.0	4150.0	+0,-13	303 Stainless Steel
20314132	20.0	4200.0	+0,-13	303 Stainless Steel
20314149	20.0	4250.0	+0,-13	303 Stainless Steel
20314156	20.0	4300.0	+0,-13	303 Stainless Steel
20314163	20.0	4350.0	+0,-13	303 Stainless Steel
20314170	20.0	4400.0	+0,-13	303 Stainless Steel
20314187	20.0	4450.0	+0,-13	303 Stainless Steel
20314194	20.0	4500.0	+0,-13	303 Stainless Steel
20314200	20.0	4550.0	+0,-13	303 Stainless Steel
20314217	20.0	4600.0	+0,-13	303 Stainless Steel
20314224	20.0	4650.0	+0,-13	303 Stainless Steel
20314231	20.0	4700.0	+0,-13	303 Stainless Steel
20314248	20.0	4750.0	+0,-13	303 Stainless Steel
20314255	20.0	4800.0	+0,-13	303 Stainless Steel
20314262	20.0	4850.0	+0,-13	303 Stainless Steel
20314279	20.0	4900.0	+0,-13	303 Stainless Steel
20314286	20.0	4950.0	+0,-13	303 Stainless Steel
20314293	20.0	5000.0	+0,-13	303 Stainless Steel
20314309	20.0	5050.0	+0,-13	303 Stainless Steel
20314316	20.0	5100.0	+0,-13	303 Stainless Steel
20314323	20.0	5150.0	+0,-13	303 Stainless Steel
20314330	20.0	5200.0	+0,-13	303 Stainless Steel
20314347	20.0	5250.0	+0,-13	303 Stainless Steel
20314354	20.0	5300.0	+0,-13	303 Stainless Steel
20314361	20.0	5350.0	+0,-13	303 Stainless Steel
20314378	20.0	5400.0	+0,-13	303 Stainless Steel

Part Number	d1	l1	Tolerance μ tol. h6	Material
20314385	20.0	5450.0	+0,-13	303 Stainless Steel
20314392	20.0	5500.0	+0,-13	303 Stainless Steel
20314408	20.0	5550.0	+0,-13	303 Stainless Steel
20314415	20.0	5600.0	+0,-13	303 Stainless Steel
20314422	20.0	5650.0	+0,-13	303 Stainless Steel
20314439	20.0	5700.0	+0,-13	303 Stainless Steel
20314446	20.0	5750.0	+0,-13	303 Stainless Steel
20314453	20.0	5800.0	+0,-13	303 Stainless Steel
20314460	20.0	5850.0	+0,-13	303 Stainless Steel
20314477	20.0	5900.0	+0,-13	303 Stainless Steel
20314484	20.0	5950.0	+0,-13	303 Stainless Steel
20314491	20.0	6000.0	+0,-13	303 Stainless Steel
20314507	25.0	100.0	+0,-13	303 Stainless Steel
20314514	25.0	150.0	+0,-13	303 Stainless Steel
20314521	25.0	200.0	+0,-13	303 Stainless Steel
20314538	25.0	250.0	+0,-13	303 Stainless Steel
20314545	25.0	300.0	+0,-13	303 Stainless Steel
20314552	25.0	350.0	+0,-13	303 Stainless Steel
20314569	25.0	400.0	+0,-13	303 Stainless Steel
20314576	25.0	450.0	+0,-13	303 Stainless Steel
20314583	25.0	500.0	+0,-13	303 Stainless Steel
20314590	25.0	550.0	+0,-13	303 Stainless Steel
20314606	25.0	600.0	+0,-13	303 Stainless Steel
20314613	25.0	650.0	+0,-13	303 Stainless Steel
20314620	25.0	700.0	+0,-13	303 Stainless Steel
20314637	25.0	750.0	+0,-13	303 Stainless Steel

Stainless AISI 303/316 Shafts

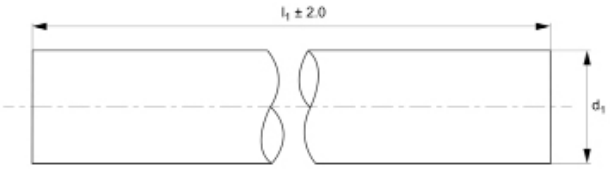



Part Number	d1	l1	Tolerance μ tol. h6	Material
20314644	25.0	800.0	+0,-13	303 Stainless Steel
20314651	25.0	850.0	+0,-13	303 Stainless Steel
20314668	25.0	900.0	+0,-13	303 Stainless Steel
20314675	25.0	950.0	+0,-13	303 Stainless Steel
20314682	25.0	1000.0	+0,-13	303 Stainless Steel
20314699	25.0	1050.0	+0,-13	303 Stainless Steel
20314705	25.0	1100.0	+0,-13	303 Stainless Steel
20314712	25.0	1150.0	+0,-13	303 Stainless Steel
20314729	25.0	1200.0	+0,-13	303 Stainless Steel
20314736	25.0	1250.0	+0,-13	303 Stainless Steel
20314743	25.0	1300.0	+0,-13	303 Stainless Steel
20314750	25.0	1350.0	+0,-13	303 Stainless Steel
20314767	25.0	1400.0	+0,-13	303 Stainless Steel
20314774	25.0	1450.0	+0,-13	303 Stainless Steel
20314781	25.0	1500.0	+0,-13	303 Stainless Steel
20314798	25.0	1550.0	+0,-13	303 Stainless Steel
20314804	25.0	1600.0	+0,-13	303 Stainless Steel
20314811	25.0	1650.0	+0,-13	303 Stainless Steel
20314828	25.0	1700.0	+0,-13	303 Stainless Steel
20314835	25.0	1750.0	+0,-13	303 Stainless Steel
20314842	25.0	1800.0	+0,-13	303 Stainless Steel
20314859	25.0	1850.0	+0,-13	303 Stainless Steel
20314866	25.0	1900.0	+0,-13	303 Stainless Steel
20314873	25.0	1950.0	+0,-13	303 Stainless Steel
20314880	25.0	2000.0	+0,-13	303 Stainless Steel
20314897	25.0	2050.0	+0,-13	303 Stainless Steel

Part Number	d1	l1	Tolerance μ tol. h6	Material
20314903	25.0	2100.0	+0,-13	303 Stainless Steel
20314910	25.0	2150.0	+0,-13	303 Stainless Steel
20314927	25.0	2200.0	+0,-13	303 Stainless Steel
20314934	25.0	2250.0	+0,-13	303 Stainless Steel
20314941	25.0	2300.0	+0,-13	303 Stainless Steel
20314958	25.0	2350.0	+0,-13	303 Stainless Steel
20314965	25.0	2400.0	+0,-13	303 Stainless Steel
20314972	25.0	2450.0	+0,-13	303 Stainless Steel
20314989	25.0	2500.0	+0,-13	303 Stainless Steel
20314996	25.0	2550.0	+0,-13	303 Stainless Steel
20315009	25.0	2600.0	+0,-13	303 Stainless Steel
20315016	25.0	2650.0	+0,-13	303 Stainless Steel
20315023	25.0	2700.0	+0,-13	303 Stainless Steel
20315030	25.0	2750.0	+0,-13	303 Stainless Steel
20315047	25.0	2800.0	+0,-13	303 Stainless Steel
20315054	25.0	2850.0	+0,-13	303 Stainless Steel
20315061	25.0	2900.0	+0,-13	303 Stainless Steel
20315078	25.0	2950.0	+0,-13	303 Stainless Steel
20315085	25.0	3000.0	+0,-13	303 Stainless Steel
20315092	25.0	3050.0	+0,-13	303 Stainless Steel
20315108	25.0	3100.0	+0,-13	303 Stainless Steel
20315115	25.0	3150.0	+0,-13	303 Stainless Steel
20315122	25.0	3200.0	+0,-13	303 Stainless Steel
20315139	25.0	3250.0	+0,-13	303 Stainless Steel
20315146	25.0	3300.0	+0,-13	303 Stainless Steel
20315153	25.0	3350.0	+0,-13	303 Stainless Steel

Stainless AISI 303/316 Shafts

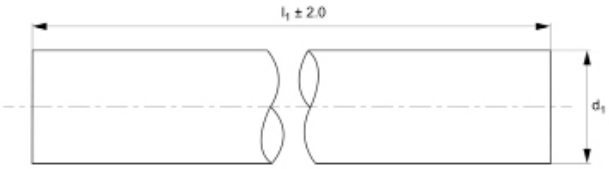



Part Number	d1	l1	Tolerance μ tol. h6	Material
20315160	25.0	3400.0	+0,-13	303 Stainless Steel
20315177	25.0	3450.0	+0,-13	303 Stainless Steel
20315184	25.0	3500.0	+0,-13	303 Stainless Steel
20315191	25.0	3550.0	+0,-13	303 Stainless Steel
20315207	25.0	3600.0	+0,-13	303 Stainless Steel
20315214	25.0	3650.0	+0,-13	303 Stainless Steel
20315221	25.0	3700.0	+0,-13	303 Stainless Steel
20315238	25.0	3750.0	+0,-13	303 Stainless Steel
20315245	25.0	3800.0	+0,-13	303 Stainless Steel
20315252	25.0	3850.0	+0,-13	303 Stainless Steel
20315269	25.0	3900.0	+0,-13	303 Stainless Steel
20315276	25.0	3950.0	+0,-13	303 Stainless Steel
20315283	25.0	4000.0	+0,-13	303 Stainless Steel
20315290	25.0	4050.0	+0,-13	303 Stainless Steel
20315306	25.0	4100.0	+0,-13	303 Stainless Steel
20315313	25.0	4150.0	+0,-13	303 Stainless Steel
20315320	25.0	4200.0	+0,-13	303 Stainless Steel
20315337	25.0	4250.0	+0,-13	303 Stainless Steel
20315344	25.0	4300.0	+0,-13	303 Stainless Steel
20315351	25.0	4350.0	+0,-13	303 Stainless Steel
20315368	25.0	4400.0	+0,-13	303 Stainless Steel
20315375	25.0	4450.0	+0,-13	303 Stainless Steel
20315382	25.0	4500.0	+0,-13	303 Stainless Steel
20315399	25.0	4550.0	+0,-13	303 Stainless Steel
20315405	25.0	4600.0	+0,-13	303 Stainless Steel
20315412	25.0	4650.0	+0,-13	303 Stainless Steel

Part Number	d1	l1	Tolerance μ tol. h6	Material
20315429	25.0	4700.0	+0,-13	303 Stainless Steel
20315436	25.0	4750.0	+0,-13	303 Stainless Steel
20315443	25.0	4800.0	+0,-13	303 Stainless Steel
20315450	25.0	4850.0	+0,-13	303 Stainless Steel
20315467	25.0	4900.0	+0,-13	303 Stainless Steel
20315474	25.0	4950.0	+0,-13	303 Stainless Steel
20315481	25.0	5000.0	+0,-13	303 Stainless Steel
20315498	25.0	5050.0	+0,-13	303 Stainless Steel
20315504	25.0	5100.0	+0,-13	303 Stainless Steel
20315511	25.0	5150.0	+0,-13	303 Stainless Steel
20315528	25.0	5200.0	+0,-13	303 Stainless Steel
20315535	25.0	5250.0	+0,-13	303 Stainless Steel
20315542	25.0	5300.0	+0,-13	303 Stainless Steel
20315559	25.0	5350.0	+0,-13	303 Stainless Steel
20315566	25.0	5400.0	+0,-13	303 Stainless Steel
20315573	25.0	5450.0	+0,-13	303 Stainless Steel
20315580	25.0	5500.0	+0,-13	303 Stainless Steel
20315597	25.0	5550.0	+0,-13	303 Stainless Steel
20315603	25.0	5600.0	+0,-13	303 Stainless Steel
20315610	25.0	5650.0	+0,-13	303 Stainless Steel
20315627	25.0	5700.0	+0,-13	303 Stainless Steel
20315634	25.0	5750.0	+0,-13	303 Stainless Steel
20315641	25.0	5800.0	+0,-13	303 Stainless Steel
20315658	25.0	5850.0	+0,-13	303 Stainless Steel
20315665	25.0	5900.0	+0,-13	303 Stainless Steel
20315672	25.0	5950.0	+0,-13	303 Stainless Steel

Stainless AISI 303/316 Shafts

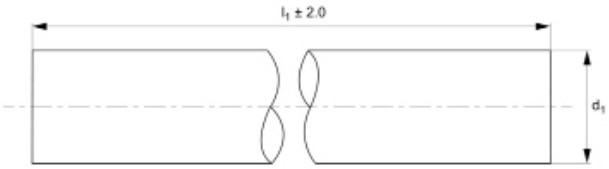



Part Number	d1	l1	Tolerance μ tol. h6	Material
20315689	25.0	6000.0	+0,-13	303 Stainless Steel
20315696	30.0	100.0	+0,-13	303 Stainless Steel
20315702	30.0	150.0	+0,-13	303 Stainless Steel
20315719	30.0	200.0	+0,-13	303 Stainless Steel
20315726	30.0	250.0	+0,-13	303 Stainless Steel
20315733	30.0	300.0	+0,-13	303 Stainless Steel
20315740	30.0	350.0	+0,-13	303 Stainless Steel
20315757	30.0	400.0	+0,-13	303 Stainless Steel
20315764	30.0	450.0	+0,-13	303 Stainless Steel
20315771	30.0	500.0	+0,-13	303 Stainless Steel
20315788	30.0	550.0	+0,-13	303 Stainless Steel
20315795	30.0	600.0	+0,-13	303 Stainless Steel
20315801	30.0	650.0	+0,-13	303 Stainless Steel
20315818	30.0	700.0	+0,-13	303 Stainless Steel
20315825	30.0	750.0	+0,-13	303 Stainless Steel
20315832	30.0	800.0	+0,-13	303 Stainless Steel
20315849	30.0	850.0	+0,-13	303 Stainless Steel
20315856	30.0	900.0	+0,-13	303 Stainless Steel
20315863	30.0	950.0	+0,-13	303 Stainless Steel
20315870	30.0	1000.0	+0,-13	303 Stainless Steel
20315887	30.0	1050.0	+0,-13	303 Stainless Steel
20315894	30.0	1100.0	+0,-13	303 Stainless Steel
20315900	30.0	1150.0	+0,-13	303 Stainless Steel
20315917	30.0	1200.0	+0,-13	303 Stainless Steel
20315924	30.0	1250.0	+0,-13	303 Stainless Steel
20315931	30.0	1300.0	+0,-13	303 Stainless Steel

Part Number	d1	l1	Tolerance μ tol. h6	Material
20315948	30.0	1350.0	+0,-13	303 Stainless Steel
20315955	30.0	1400.0	+0,-13	303 Stainless Steel
20315962	30.0	1450.0	+0,-13	303 Stainless Steel
20315979	30.0	1500.0	+0,-13	303 Stainless Steel
20315986	30.0	1550.0	+0,-13	303 Stainless Steel
20315993	30.0	1600.0	+0,-13	303 Stainless Steel
20316006	30.0	1650.0	+0,-13	303 Stainless Steel
20316013	30.0	1700.0	+0,-13	303 Stainless Steel
20316020	30.0	1750.0	+0,-13	303 Stainless Steel
20316037	30.0	1800.0	+0,-13	303 Stainless Steel
20316044	30.0	1850.0	+0,-13	303 Stainless Steel
20316051	30.0	1900.0	+0,-13	303 Stainless Steel
20316068	30.0	1950.0	+0,-13	303 Stainless Steel
20316075	30.0	2000.0	+0,-13	303 Stainless Steel
20316082	30.0	2050.0	+0,-13	303 Stainless Steel
20316099	30.0	2100.0	+0,-13	303 Stainless Steel
20316105	30.0	2150.0	+0,-13	303 Stainless Steel
20316112	30.0	2200.0	+0,-13	303 Stainless Steel
20316129	30.0	2250.0	+0,-13	303 Stainless Steel
20316136	30.0	2300.0	+0,-13	303 Stainless Steel
20316143	30.0	2350.0	+0,-13	303 Stainless Steel
20316150	30.0	2400.0	+0,-13	303 Stainless Steel
20316167	30.0	2450.0	+0,-13	303 Stainless Steel
20316174	30.0	2500.0	+0,-13	303 Stainless Steel
20316181	30.0	2550.0	+0,-13	303 Stainless Steel
20316198	30.0	2600.0	+0,-13	303 Stainless Steel

Stainless AISI 303/316 Shafts

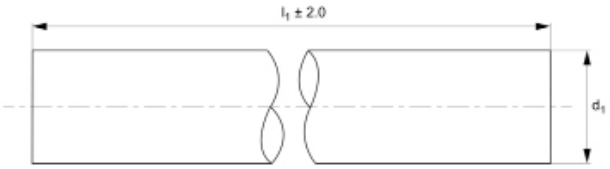



Part Number	d1	l1	Tolerance μ tol. h6	Material
20316204	30.0	2650.0	+0,-13	303 Stainless Steel
20316211	30.0	2700.0	+0,-13	303 Stainless Steel
20316228	30.0	2750.0	+0,-13	303 Stainless Steel
20316235	30.0	2800.0	+0,-13	303 Stainless Steel
20316242	30.0	2850.0	+0,-13	303 Stainless Steel
20316259	30.0	2900.0	+0,-13	303 Stainless Steel
20316266	30.0	2950.0	+0,-13	303 Stainless Steel
20316273	30.0	3000.0	+0,-13	303 Stainless Steel
20316280	30.0	3050.0	+0,-13	303 Stainless Steel
20316297	30.0	3100.0	+0,-13	303 Stainless Steel
20316303	30.0	3150.0	+0,-13	303 Stainless Steel
20316310	30.0	3200.0	+0,-13	303 Stainless Steel
20316327	30.0	3250.0	+0,-13	303 Stainless Steel
20316334	30.0	3300.0	+0,-13	303 Stainless Steel
20316341	30.0	3350.0	+0,-13	303 Stainless Steel
20316358	30.0	3400.0	+0,-13	303 Stainless Steel
20316365	30.0	3450.0	+0,-13	303 Stainless Steel
20316372	30.0	3500.0	+0,-13	303 Stainless Steel
20316389	30.0	3550.0	+0,-13	303 Stainless Steel
20316396	30.0	3600.0	+0,-13	303 Stainless Steel
20316402	30.0	3650.0	+0,-13	303 Stainless Steel
20316419	30.0	3700.0	+0,-13	303 Stainless Steel
20316426	30.0	3750.0	+0,-13	303 Stainless Steel
20316433	30.0	3800.0	+0,-13	303 Stainless Steel
20316440	30.0	3850.0	+0,-13	303 Stainless Steel
20316457	30.0	3900.0	+0,-13	303 Stainless Steel

Part Number	d1	l1	Tolerance μ tol. h6	Material
20316464	30.0	3950.0	+0,-13	303 Stainless Steel
20316471	30.0	4000.0	+0,-13	303 Stainless Steel
20316488	30.0	4050.0	+0,-13	303 Stainless Steel
20316495	30.0	4100.0	+0,-13	303 Stainless Steel
20316501	30.0	4150.0	+0,-13	303 Stainless Steel
20316518	30.0	4200.0	+0,-13	303 Stainless Steel
20316525	30.0	4250.0	+0,-13	303 Stainless Steel
20316532	30.0	4300.0	+0,-13	303 Stainless Steel
20316549	30.0	4350.0	+0,-13	303 Stainless Steel
20316556	30.0	4400.0	+0,-13	303 Stainless Steel
20316563	30.0	4450.0	+0,-13	303 Stainless Steel
20316570	30.0	4500.0	+0,-13	303 Stainless Steel
20316587	30.0	4550.0	+0,-13	303 Stainless Steel
20316594	30.0	4600.0	+0,-13	303 Stainless Steel
20316600	30.0	4650.0	+0,-13	303 Stainless Steel
20316617	30.0	4700.0	+0,-13	303 Stainless Steel
20316624	30.0	4750.0	+0,-13	303 Stainless Steel
20316631	30.0	4800.0	+0,-13	303 Stainless Steel
20316648	30.0	4850.0	+0,-13	303 Stainless Steel
20316655	30.0	4900.0	+0,-13	303 Stainless Steel
20316662	30.0	4950.0	+0,-13	303 Stainless Steel
20316679	30.0	5000.0	+0,-13	303 Stainless Steel
20316686	30.0	5050.0	+0,-13	303 Stainless Steel
20316693	30.0	5100.0	+0,-13	303 Stainless Steel
20316709	30.0	5150.0	+0,-13	303 Stainless Steel
20316716	30.0	5200.0	+0,-13	303 Stainless Steel

Stainless AISI 303/316 Shafts

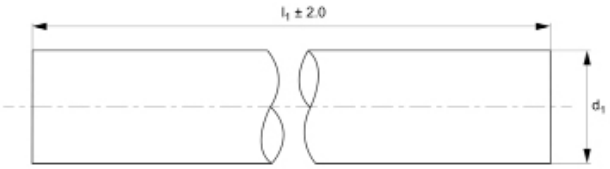



Part Number	d1	l1	Tolerance μ tol. h6	Material
20316723	30.0	5250.0	+0,-13	303 Stainless Steel
20316730	30.0	5300.0	+0,-13	303 Stainless Steel
20316747	30.0	5350.0	+0,-13	303 Stainless Steel
20316754	30.0	5400.0	+0,-13	303 Stainless Steel
20316761	30.0	5450.0	+0,-13	303 Stainless Steel
20316778	30.0	5500.0	+0,-13	303 Stainless Steel
20316785	30.0	5550.0	+0,-13	303 Stainless Steel
20316792	30.0	5600.0	+0,-13	303 Stainless Steel
20316808	30.0	5650.0	+0,-13	303 Stainless Steel
20316815	30.0	5700.0	+0,-13	303 Stainless Steel
20316822	30.0	5750.0	+0,-13	303 Stainless Steel
20316839	30.0	5800.0	+0,-13	303 Stainless Steel
20316846	30.0	5850.0	+0,-13	303 Stainless Steel
20316853	30.0	5900.0	+0,-13	303 Stainless Steel
20316860	30.0	5950.0	+0,-13	303 Stainless Steel
20316877	30.0	6000.0	+0,-13	303 Stainless Steel
20316884	40.0	100.0	+0,-16	303 Stainless Steel
20316891	40.0	150.0	+0,-16	303 Stainless Steel
20316907	40.0	200.0	+0,-16	303 Stainless Steel
20316914	40.0	250.0	+0,-16	303 Stainless Steel
20316921	40.0	300.0	+0,-16	303 Stainless Steel
20316938	40.0	350.0	+0,-16	303 Stainless Steel
20316945	40.0	400.0	+0,-16	303 Stainless Steel
20316952	40.0	450.0	+0,-16	303 Stainless Steel
20316969	40.0	500.0	+0,-16	303 Stainless Steel
20316976	40.0	550.0	+0,-16	303 Stainless Steel

Part Number	d1	l1	Tolerance μ tol. h6	Material
20316983	40.0	600.0	+0,-16	303 Stainless Steel
20316990	40.0	650.0	+0,-16	303 Stainless Steel
20317003	40.0	700.0	+0,-16	303 Stainless Steel
20317010	40.0	750.0	+0,-16	303 Stainless Steel
20317027	40.0	800.0	+0,-16	303 Stainless Steel
20317034	40.0	850.0	+0,-16	303 Stainless Steel
20317041	40.0	900.0	+0,-16	303 Stainless Steel
20317058	40.0	950.0	+0,-16	303 Stainless Steel
20317065	40.0	1000.0	+0,-16	303 Stainless Steel
20317072	40.0	1050.0	+0,-16	303 Stainless Steel
20317089	40.0	1100.0	+0,-16	303 Stainless Steel
20317096	40.0	1150.0	+0,-16	303 Stainless Steel
20317102	40.0	1200.0	+0,-16	303 Stainless Steel
20317119	40.0	1250.0	+0,-16	303 Stainless Steel
20317126	40.0	1300.0	+0,-16	303 Stainless Steel
20317133	40.0	1350.0	+0,-16	303 Stainless Steel
20317140	40.0	1400.0	+0,-16	303 Stainless Steel
20317157	40.0	1450.0	+0,-16	303 Stainless Steel
20317164	40.0	1500.0	+0,-16	303 Stainless Steel
20317171	40.0	1550.0	+0,-16	303 Stainless Steel
20317188	40.0	1600.0	+0,-16	303 Stainless Steel
20317195	40.0	1650.0	+0,-16	303 Stainless Steel
20317201	40.0	1700.0	+0,-16	303 Stainless Steel
20317218	40.0	1750.0	+0,-16	303 Stainless Steel
20317225	40.0	1800.0	+0,-16	303 Stainless Steel
20317232	40.0	1850.0	+0,-16	303 Stainless Steel

Stainless AISI 303/316 Shafts

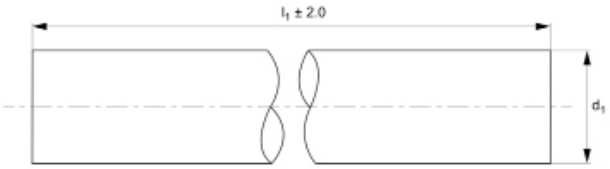



Part Number	d1	l1	Tolerance μ tol. h6	Material
20317249	40.0	1900.0	+0,-16	303 Stainless Steel
20317256	40.0	1950.0	+0,-16	303 Stainless Steel
20317263	40.0	2000.0	+0,-16	303 Stainless Steel
20317270	40.0	2050.0	+0,-16	303 Stainless Steel
20317287	40.0	2100.0	+0,-16	303 Stainless Steel
20317294	40.0	2150.0	+0,-16	303 Stainless Steel
20317300	40.0	2200.0	+0,-16	303 Stainless Steel
20317317	40.0	2250.0	+0,-16	303 Stainless Steel
20317324	40.0	2300.0	+0,-16	303 Stainless Steel
20317331	40.0	2350.0	+0,-16	303 Stainless Steel
20317348	40.0	2400.0	+0,-16	303 Stainless Steel
20317355	40.0	2450.0	+0,-16	303 Stainless Steel
20317362	40.0	2500.0	+0,-16	303 Stainless Steel
20317379	40.0	2550.0	+0,-16	303 Stainless Steel
20317386	40.0	2600.0	+0,-16	303 Stainless Steel
20317393	40.0	2650.0	+0,-16	303 Stainless Steel
20317409	40.0	2700.0	+0,-16	303 Stainless Steel
20317416	40.0	2750.0	+0,-16	303 Stainless Steel
20317423	40.0	2800.0	+0,-16	303 Stainless Steel
20317430	40.0	2850.0	+0,-16	303 Stainless Steel
20317447	40.0	2900.0	+0,-16	303 Stainless Steel
20317454	40.0	2950.0	+0,-16	303 Stainless Steel
20317461	40.0	3000.0	+0,-16	303 Stainless Steel
20317478	40.0	3050.0	+0,-16	303 Stainless Steel
20317485	40.0	3100.0	+0,-16	303 Stainless Steel
20317492	40.0	3150.0	+0,-16	303 Stainless Steel

Part Number	d1	l1	Tolerance μ tol. h6	Material
20317508	40.0	3200.0	+0,-16	303 Stainless Steel
20317515	40.0	3250.0	+0,-16	303 Stainless Steel
20317522	40.0	3300.0	+0,-16	303 Stainless Steel
20317539	40.0	3350.0	+0,-16	303 Stainless Steel
20317546	40.0	3400.0	+0,-16	303 Stainless Steel
20317553	40.0	3450.0	+0,-16	303 Stainless Steel
20317560	40.0	3500.0	+0,-16	303 Stainless Steel
20317577	40.0	3550.0	+0,-16	303 Stainless Steel
20317584	40.0	3600.0	+0,-16	303 Stainless Steel
20317591	40.0	3650.0	+0,-16	303 Stainless Steel
20317607	40.0	3700.0	+0,-16	303 Stainless Steel
20317614	40.0	3750.0	+0,-16	303 Stainless Steel
20317621	40.0	3800.0	+0,-16	303 Stainless Steel
20317638	40.0	3850.0	+0,-16	303 Stainless Steel
20317645	40.0	3900.0	+0,-16	303 Stainless Steel
20317652	40.0	3950.0	+0,-16	303 Stainless Steel
20317669	40.0	4000.0	+0,-16	303 Stainless Steel
20317676	40.0	4050.0	+0,-16	303 Stainless Steel
20317683	40.0	4100.0	+0,-16	303 Stainless Steel
20317690	40.0	4150.0	+0,-16	303 Stainless Steel
20317706	40.0	4200.0	+0,-16	303 Stainless Steel
20317713	40.0	4250.0	+0,-16	303 Stainless Steel
20317720	40.0	4300.0	+0,-16	303 Stainless Steel
20317737	40.0	4350.0	+0,-16	303 Stainless Steel
20317744	40.0	4400.0	+0,-16	303 Stainless Steel
20317751	40.0	4450.0	+0,-16	303 Stainless Steel

Stainless AISI 303/316 Shafts

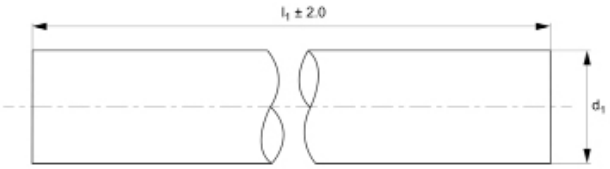



Part Number	d1	l1	Tolerance μ tol. h6	Material
20317768	40.0	4500.0	+0,-16	303 Stainless Steel
20317775	40.0	4550.0	+0,-16	303 Stainless Steel
20317782	40.0	4600.0	+0,-16	303 Stainless Steel
20317799	40.0	4650.0	+0,-16	303 Stainless Steel
20317805	40.0	4700.0	+0,-16	303 Stainless Steel
20317812	40.0	4750.0	+0,-16	303 Stainless Steel
20317829	40.0	4800.0	+0,-16	303 Stainless Steel
20317836	40.0	4850.0	+0,-16	303 Stainless Steel
20317843	40.0	4900.0	+0,-16	303 Stainless Steel
20317850	40.0	4950.0	+0,-16	303 Stainless Steel
20317867	40.0	5000.0	+0,-16	303 Stainless Steel
20317874	40.0	5050.0	+0,-16	303 Stainless Steel
20317881	40.0	5100.0	+0,-16	303 Stainless Steel
20317898	40.0	5150.0	+0,-16	303 Stainless Steel
20317904	40.0	5200.0	+0,-16	303 Stainless Steel
20317911	40.0	5250.0	+0,-16	303 Stainless Steel
20317928	40.0	5300.0	+0,-16	303 Stainless Steel
20317935	40.0	5350.0	+0,-16	303 Stainless Steel
20317942	40.0	5400.0	+0,-16	303 Stainless Steel
20317959	40.0	5450.0	+0,-16	303 Stainless Steel
20317966	40.0	5500.0	+0,-16	303 Stainless Steel
20317973	40.0	5550.0	+0,-16	303 Stainless Steel
20317980	40.0	5600.0	+0,-16	303 Stainless Steel
20317997	40.0	5650.0	+0,-16	303 Stainless Steel
20318000	40.0	5700.0	+0,-16	303 Stainless Steel
20318017	40.0	5750.0	+0,-16	303 Stainless Steel

Part Number	d1	l1	Tolerance μ tol. h6	Material
20318024	40.0	5800.0	+0,-16	303 Stainless Steel
20318031	40.0	5850.0	+0,-16	303 Stainless Steel
20318048	40.0	5900.0	+0,-16	303 Stainless Steel
20318055	40.0	5950.0	+0,-16	303 Stainless Steel
20318062	40.0	6000.0	+0,-16	303 Stainless Steel
20318079	50.0	100.0	+0,-16	303 Stainless Steel
20318086	50.0	150.0	+0,-16	303 Stainless Steel
20318093	50.0	200.0	+0,-16	303 Stainless Steel
20318109	50.0	250.0	+0,-16	303 Stainless Steel
20318116	50.0	300.0	+0,-16	303 Stainless Steel
20318123	50.0	350.0	+0,-16	303 Stainless Steel
20318130	50.0	400.0	+0,-16	303 Stainless Steel
20318147	50.0	450.0	+0,-16	303 Stainless Steel
20318154	50.0	500.0	+0,-16	303 Stainless Steel
20318161	50.0	550.0	+0,-16	303 Stainless Steel
20318178	50.0	600.0	+0,-16	303 Stainless Steel
20318185	50.0	650.0	+0,-16	303 Stainless Steel
20318192	50.0	700.0	+0,-16	303 Stainless Steel
20318208	50.0	750.0	+0,-16	303 Stainless Steel
20318215	50.0	800.0	+0,-16	303 Stainless Steel
20318222	50.0	850.0	+0,-16	303 Stainless Steel
20318239	50.0	900.0	+0,-16	303 Stainless Steel
20318246	50.0	1000.0	+0,-16	303 Stainless Steel
20318253	50.0	1050.0	+0,-16	303 Stainless Steel
20318260	50.0	1100.0	+0,-16	303 Stainless Steel
20318277	50.0	1150.0	+0,-16	303 Stainless Steel

Stainless AISI 303/316 Shafts

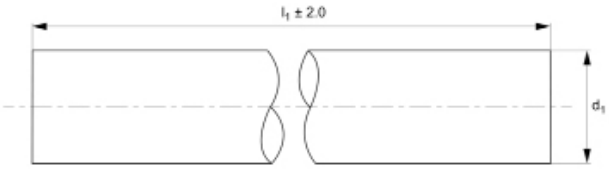



Part Number	d1	l1	Tolerance μ tol. h6	Material
20318284	50.0	1200.0	+0,-16	303 Stainless Steel
20318291	50.0	1250.0	+0,-16	303 Stainless Steel
20318307	50.0	1300.0	+0,-16	303 Stainless Steel
20318314	50.0	1350.0	+0,-16	303 Stainless Steel
20318321	50.0	1400.0	+0,-16	303 Stainless Steel
20318338	50.0	1450.0	+0,-16	303 Stainless Steel
20318345	50.0	1500.0	+0,-16	303 Stainless Steel
20318352	50.0	1550.0	+0,-16	303 Stainless Steel
20318369	50.0	1600.0	+0,-16	303 Stainless Steel
20318376	50.0	1650.0	+0,-16	303 Stainless Steel
20318383	50.0	1700.0	+0,-16	303 Stainless Steel
20318390	50.0	1750.0	+0,-16	303 Stainless Steel
20318406	50.0	1800.0	+0,-16	303 Stainless Steel
20318413	50.0	1850.0	+0,-16	303 Stainless Steel
20318420	50.0	1900.0	+0,-16	303 Stainless Steel
20318437	50.0	1950.0	+0,-16	303 Stainless Steel
20318444	50.0	2000.0	+0,-16	303 Stainless Steel
20318451	50.0	2050.0	+0,-16	303 Stainless Steel
20318468	50.0	2100.0	+0,-16	303 Stainless Steel
20318475	50.0	2150.0	+0,-16	303 Stainless Steel
20318482	50.0	2200.0	+0,-16	303 Stainless Steel
20318499	50.0	2250.0	+0,-16	303 Stainless Steel
20318505	50.0	2300.0	+0,-16	303 Stainless Steel
20318512	50.0	2350.0	+0,-16	303 Stainless Steel
20318529	50.0	2400.0	+0,-16	303 Stainless Steel
20318536	50.0	2450.0	+0,-16	303 Stainless Steel

Part Number	d1	l1	Tolerance μ tol. h6	Material
20318543	50.0	2500.0	+0,-16	303 Stainless Steel
20318550	50.0	2550.0	+0,-16	303 Stainless Steel
20318567	50.0	2600.0	+0,-16	303 Stainless Steel
20318574	50.0	2650.0	+0,-16	303 Stainless Steel
20318581	50.0	2700.0	+0,-16	303 Stainless Steel
20318598	50.0	2750.0	+0,-16	303 Stainless Steel
20318604	50.0	2800.0	+0,-16	303 Stainless Steel
20318611	50.0	2850.0	+0,-16	303 Stainless Steel
20318628	50.0	2900.0	+0,-16	303 Stainless Steel
20318635	50.0	2950.0	+0,-16	303 Stainless Steel
20318642	50.0	3000.0	+0,-16	303 Stainless Steel
20318659	50.0	3050.0	+0,-16	303 Stainless Steel
20318666	50.0	3100.0	+0,-16	303 Stainless Steel
20318673	50.0	3150.0	+0,-16	303 Stainless Steel
20318680	50.0	3200.0	+0,-16	303 Stainless Steel
20318697	50.0	3250.0	+0,-16	303 Stainless Steel
20318703	50.0	3300.0	+0,-16	303 Stainless Steel
20318710	50.0	3350.0	+0,-16	303 Stainless Steel
20318727	50.0	3400.0	+0,-16	303 Stainless Steel
20318734	50.0	3450.0	+0,-16	303 Stainless Steel
20318741	50.0	3500.0	+0,-16	303 Stainless Steel
20318758	50.0	3550.0	+0,-16	303 Stainless Steel
20318765	50.0	3600.0	+0,-16	303 Stainless Steel
20318772	50.0	3650.0	+0,-16	303 Stainless Steel
20318789	50.0	3700.0	+0,-16	303 Stainless Steel
20318796	50.0	3750.0	+0,-16	303 Stainless Steel

Stainless AISI 303/316 Shafts

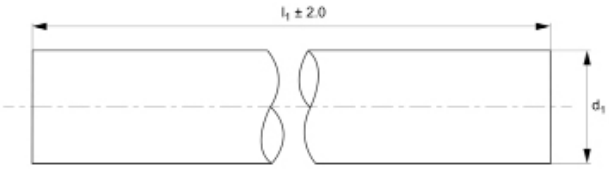



Part Number	d1	l1	Tolerance μ tol. h6	Material
20318802	50.0	3800.0	+0,-16	303 Stainless Steel
20318819	50.0	3850.0	+0,-16	303 Stainless Steel
20318826	50.0	3900.0	+0,-16	303 Stainless Steel
20318833	50.0	3950.0	+0,-16	303 Stainless Steel
20318840	50.0	4000.0	+0,-16	303 Stainless Steel
20318857	50.0	4050.0	+0,-16	303 Stainless Steel
20318864	50.0	4100.0	+0,-16	303 Stainless Steel
20318871	50.0	4150.0	+0,-16	303 Stainless Steel
20318888	50.0	4200.0	+0,-16	303 Stainless Steel
20318895	50.0	4250.0	+0,-16	303 Stainless Steel
20318901	50.0	4300.0	+0,-16	303 Stainless Steel
20318918	50.0	4350.0	+0,-16	303 Stainless Steel
20318925	50.0	4400.0	+0,-16	303 Stainless Steel
20318932	50.0	4450.0	+0,-16	303 Stainless Steel
20318949	50.0	4500.0	+0,-16	303 Stainless Steel
20318956	50.0	4550.0	+0,-16	303 Stainless Steel
20318963	50.0	4600.0	+0,-16	303 Stainless Steel
20318970	50.0	4650.0	+0,-16	303 Stainless Steel
20318987	50.0	4700.0	+0,-16	303 Stainless Steel
20318994	50.0	4750.0	+0,-16	303 Stainless Steel
20319007	50.0	4800.0	+0,-16	303 Stainless Steel
20319014	50.0	4850.0	+0,-16	303 Stainless Steel
20319021	50.0	4900.0	+0,-16	303 Stainless Steel
20319038	50.0	4950.0	+0,-16	303 Stainless Steel
20319045	50.0	5000.0	+0,-16	303 Stainless Steel
20319052	50.0	5050.0	+0,-16	303 Stainless Steel

Part Number	d1	l1	Tolerance μ tol. h6	Material
20319069	50.0	5100.0	+0,-16	303 Stainless Steel
20319076	50.0	5150.0	+0,-16	303 Stainless Steel
20319083	50.0	5200.0	+0,-16	303 Stainless Steel
20319090	50.0	5250.0	+0,-16	303 Stainless Steel
20319106	50.0	5300.0	+0,-16	303 Stainless Steel
20319113	50.0	5350.0	+0,-16	303 Stainless Steel
20319120	50.0	5400.0	+0,-16	303 Stainless Steel
20319137	50.0	5450.0	+0,-16	303 Stainless Steel
20319144	50.0	5500.0	+0,-16	303 Stainless Steel
20319151	50.0	5550.0	+0,-16	303 Stainless Steel
20319168	50.0	5600.0	+0,-16	303 Stainless Steel
20319175	50.0	5650.0	+0,-16	303 Stainless Steel
20319182	50.0	5700.0	+0,-16	303 Stainless Steel
20319199	50.0	5750.0	+0,-16	303 Stainless Steel
20319205	50.0	5800.0	+0,-16	303 Stainless Steel
20319212	50.0	5850.0	+0,-16	303 Stainless Steel
20319229	50.0	5900.0	+0,-16	303 Stainless Steel
20319236	50.0	5950.0	+0,-16	303 Stainless Steel
20319243	50.0	6000.0	+0,-16	303 Stainless Steel
20319250	60.0	100.0	+0,-19	303 Stainless Steel
20319267	60.0	150.0	+0,-19	303 Stainless Steel
20319274	60.0	200.0	+0,-19	303 Stainless Steel
20319281	60.0	250.0	+0,-19	303 Stainless Steel
20319298	60.0	300.0	+0,-19	303 Stainless Steel
20319304	60.0	350.0	+0,-19	303 Stainless Steel
20319311	60.0	400.0	+0,-19	303 Stainless Steel

Stainless AISI 303/316 Shafts

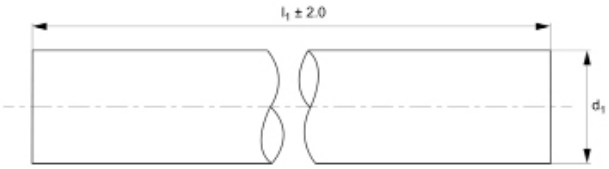



Part Number	d1	l1	Tolerance μ tol. h6	Material
20319328	60.0	450.0	+0,-19	303 Stainless Steel
20319335	60.0	500.0	+0,-19	303 Stainless Steel
20319342	60.0	550.0	+0,-19	303 Stainless Steel
20319359	60.0	600.0	+0,-19	303 Stainless Steel
20319366	60.0	650.0	+0,-19	303 Stainless Steel
20319373	60.0	700.0	+0,-19	303 Stainless Steel
20319380	60.0	750.0	+0,-19	303 Stainless Steel
20319397	60.0	800.0	+0,-19	303 Stainless Steel
20319403	60.0	850.0	+0,-19	303 Stainless Steel
20319410	60.0	900.0	+0,-19	303 Stainless Steel
20319427	60.0	950.0	+0,-19	303 Stainless Steel
20319434	60.0	1000.0	+0,-19	303 Stainless Steel
20319441	60.0	1050.0	+0,-19	303 Stainless Steel
20319458	60.0	1100.0	+0,-19	303 Stainless Steel
20319465	60.0	1150.0	+0,-19	303 Stainless Steel
20319472	60.0	1200.0	+0,-19	303 Stainless Steel
20319489	60.0	1250.0	+0,-19	303 Stainless Steel
20319496	60.0	1300.0	+0,-19	303 Stainless Steel
20319502	60.0	1350.0	+0,-19	303 Stainless Steel
20319519	60.0	1400.0	+0,-19	303 Stainless Steel
20319526	60.0	1450.0	+0,-19	303 Stainless Steel
20319533	60.0	1500.0	+0,-19	303 Stainless Steel
20319540	60.0	1550.0	+0,-19	303 Stainless Steel
20319557	60.0	1600.0	+0,-19	303 Stainless Steel
20319564	60.0	1650.0	+0,-19	303 Stainless Steel
20319571	60.0	1700.0	+0,-19	303 Stainless Steel

Part Number	d1	l1	Tolerance μ tol. h6	Material
20319588	60.0	1750.0	+0,-19	303 Stainless Steel
20319595	60.0	1800.0	+0,-19	303 Stainless Steel
20319601	60.0	1850.0	+0,-19	303 Stainless Steel
20319618	60.0	1900.0	+0,-19	303 Stainless Steel
20319625	60.0	1950.0	+0,-19	303 Stainless Steel
20319632	60.0	2000.0	+0,-19	303 Stainless Steel
20319649	60.0	2050.0	+0,-19	303 Stainless Steel
20319656	60.0	2100.0	+0,-19	303 Stainless Steel
20319663	60.0	2150.0	+0,-19	303 Stainless Steel
20319670	60.0	2200.0	+0,-19	303 Stainless Steel
20319687	60.0	2250.0	+0,-19	303 Stainless Steel
20319694	60.0	2300.0	+0,-19	303 Stainless Steel
20319700	60.0	2350.0	+0,-19	303 Stainless Steel
20319717	60.0	2400.0	+0,-19	303 Stainless Steel
20319724	60.0	2450.0	+0,-19	303 Stainless Steel
20319731	60.0	2500.0	+0,-19	303 Stainless Steel
20319748	60.0	2550.0	+0,-19	303 Stainless Steel
20319755	60.0	2600.0	+0,-19	303 Stainless Steel
20319762	60.0	2650.0	+0,-19	303 Stainless Steel
20319779	60.0	2700.0	+0,-19	303 Stainless Steel
20319786	60.0	2750.0	+0,-19	303 Stainless Steel
20319793	60.0	2800.0	+0,-19	303 Stainless Steel
20319809	60.0	2850.0	+0,-19	303 Stainless Steel
20319816	60.0	2900.0	+0,-19	303 Stainless Steel
20319823	60.0	2950.0	+0,-19	303 Stainless Steel
20319830	60.0	3000.0	+0,-19	303 Stainless Steel

Stainless AISI 303/316 Shafts

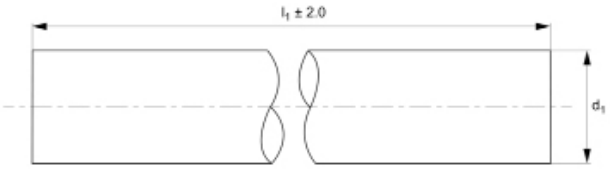



Part Number	d1	l1	Tolerance μ tol. h6	Material
20319847	60.0	3050.0	+0,-19	303 Stainless Steel
20319854	60.0	3100.0	+0,-19	303 Stainless Steel
20319861	60.0	3150.0	+0,-19	303 Stainless Steel
20319878	60.0	3200.0	+0,-19	303 Stainless Steel
20319885	60.0	3250.0	+0,-19	303 Stainless Steel
20319892	60.0	3300.0	+0,-19	303 Stainless Steel
20319908	60.0	3350.0	+0,-19	303 Stainless Steel
20319915	60.0	3400.0	+0,-19	303 Stainless Steel
20319922	60.0	3450.0	+0,-19	303 Stainless Steel
20319939	60.0	3500.0	+0,-19	303 Stainless Steel
20319946	60.0	3550.0	+0,-19	303 Stainless Steel
20319953	60.0	3600.0	+0,-19	303 Stainless Steel
20319960	60.0	3650.0	+0,-19	303 Stainless Steel
20319977	60.0	3700.0	+0,-19	303 Stainless Steel
20319984	60.0	3750.0	+0,-19	303 Stainless Steel
20319991	60.0	3800.0	+0,-19	303 Stainless Steel
20320003	60.0	3850.0	+0,-19	303 Stainless Steel
20320010	60.0	3900.0	+0,-19	303 Stainless Steel
20320027	60.0	3950.0	+0,-19	303 Stainless Steel
20320034	60.0	4000.0	+0,-19	303 Stainless Steel
20320041	60.0	4050.0	+0,-19	303 Stainless Steel
20320058	60.0	4100.0	+0,-19	303 Stainless Steel
20320065	60.0	4150.0	+0,-19	303 Stainless Steel
20320072	60.0	4200.0	+0,-19	303 Stainless Steel
20320089	60.0	4250.0	+0,-19	303 Stainless Steel
20320096	60.0	4300.0	+0,-19	303 Stainless Steel

Part Number	d1	l1	Tolerance μ tol. h6	Material
20320102	60.0	4350.0	+0,-19	303 Stainless Steel
20320119	60.0	4400.0	+0,-19	303 Stainless Steel
20320126	60.0	4450.0	+0,-19	303 Stainless Steel
20320133	60.0	4500.0	+0,-19	303 Stainless Steel
20320140	60.0	4550.0	+0,-19	303 Stainless Steel
20320157	60.0	4600.0	+0,-19	303 Stainless Steel
20320164	60.0	4650.0	+0,-19	303 Stainless Steel
20320171	60.0	4700.0	+0,-19	303 Stainless Steel
20320188	60.0	4750.0	+0,-19	303 Stainless Steel
20320195	60.0	4800.0	+0,-19	303 Stainless Steel
20320201	60.0	4850.0	+0,-19	303 Stainless Steel
20320218	60.0	4900.0	+0,-19	303 Stainless Steel
20320225	60.0	4950.0	+0,-19	303 Stainless Steel
20320232	60.0	5000.0	+0,-19	303 Stainless Steel
20320249	60.0	5050.0	+0,-19	303 Stainless Steel
20320256	60.0	5100.0	+0,-19	303 Stainless Steel
20320263	60.0	5150.0	+0,-19	303 Stainless Steel
20320270	60.0	5200.0	+0,-19	303 Stainless Steel
20320287	60.0	5250.0	+0,-19	303 Stainless Steel
20320294	60.0	5300.0	+0,-19	303 Stainless Steel
20320300	60.0	5350.0	+0,-19	303 Stainless Steel
20320317	60.0	5400.0	+0,-19	303 Stainless Steel
20320324	60.0	5450.0	+0,-19	303 Stainless Steel
20320331	60.0	5500.0	+0,-19	303 Stainless Steel
20320348	60.0	5550.0	+0,-19	303 Stainless Steel
20320355	60.0	5600.0	+0,-19	303 Stainless Steel

Stainless AISI 303/316 Shafts

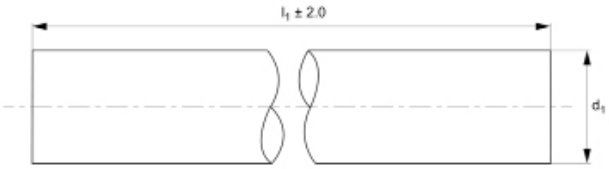



Part Number	d1	l1	Tolerance μ tol. h6	Material
20320362	60.0	5650.0	+0,-19	303 Stainless Steel
20320379	60.0	5700.0	+0,-19	303 Stainless Steel
20320386	60.0	5750.0	+0,-19	303 Stainless Steel
20320393	60.0	5800.0	+0,-19	303 Stainless Steel
20320409	60.0	5850.0	+0,-19	303 Stainless Steel
20320416	60.0	5900.0	+0,-19	303 Stainless Steel
20320423	60.0	5950.0	+0,-19	303 Stainless Steel
20320430	60.0	6000.0	+0,-19	303 Stainless Steel
20320447	6.0	100.0	+0,-8	316 Stainless Steel
20320454	6.0	150.0	+0,-8	316 Stainless Steel
20320461	6.0	200.0	+0,-8	316 Stainless Steel
20320478	6.0	250.0	+0,-8	316 Stainless Steel
20320485	6.0	300.0	+0,-8	316 Stainless Steel
20320492	6.0	350.0	+0,-8	316 Stainless Steel
20320508	6.0	400.0	+0,-8	316 Stainless Steel
20320515	6.0	450.0	+0,-8	316 Stainless Steel
20320522	6.0	500.0	+0,-8	316 Stainless Steel
20320539	6.0	550.0	+0,-8	316 Stainless Steel
20320546	6.0	600.0	+0,-8	316 Stainless Steel
20320553	6.0	650.0	+0,-8	316 Stainless Steel
20320560	6.0	700.0	+0,-8	316 Stainless Steel
20320577	6.0	750.0	+0,-8	316 Stainless Steel
20320584	6.0	800.0	+0,-8	316 Stainless Steel
20320591	6.0	850.0	+0,-8	316 Stainless Steel
20320607	6.0	900.0	+0,-8	316 Stainless Steel
20320614	6.0	950.0	+0,-8	316 Stainless Steel

Part Number	d1	l1	Tolerance μ tol. h6	Material
20320621	6.0	1000.0	+0,-8	316 Stainless Steel
20320638	6.0	1050.0	+0,-8	316 Stainless Steel
20320645	6.0	1100.0	+0,-8	316 Stainless Steel
20320652	6.0	1150.0	+0,-8	316 Stainless Steel
20320669	6.0	1200.0	+0,-8	316 Stainless Steel
20320676	6.0	1250.0	+0,-8	316 Stainless Steel
20320683	6.0	1300.0	+0,-8	316 Stainless Steel
20320690	6.0	1350.0	+0,-8	316 Stainless Steel
20320706	6.0	1400.0	+0,-8	316 Stainless Steel
20320713	6.0	1450.0	+0,-8	316 Stainless Steel
20320720	6.0	1500.0	+0,-8	316 Stainless Steel
20320737	6.0	1550.0	+0,-8	316 Stainless Steel
20320744	6.0	1600.0	+0,-8	316 Stainless Steel
20320751	6.0	1650.0	+0,-8	316 Stainless Steel
20320768	6.0	1700.0	+0,-8	316 Stainless Steel
20320775	6.0	1750.0	+0,-8	316 Stainless Steel
20320782	6.0	1800.0	+0,-8	316 Stainless Steel
20320799	6.0	1850.0	+0,-8	316 Stainless Steel
20320805	6.0	1900.0	+0,-8	316 Stainless Steel
20320812	6.0	1950.0	+0,-8	316 Stainless Steel
20320829	6.0	2000.0	+0,-8	316 Stainless Steel
20320836	6.0	2050.0	+0,-8	316 Stainless Steel
20320843	6.0	2100.0	+0,-8	316 Stainless Steel
20320850	6.0	2150.0	+0,-8	316 Stainless Steel
20320867	6.0	2200.0	+0,-8	316 Stainless Steel
20320874	6.0	2250.0	+0,-8	316 Stainless Steel

Stainless AISI 303/316 Shafts

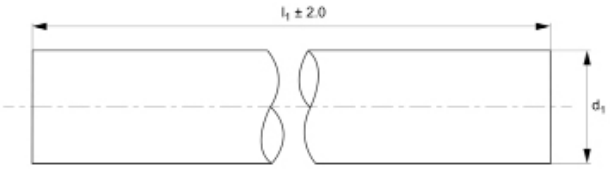



Part Number	d1	l1	Tolerance μ tol. h6	Material
20320881	6.0	2300.0	+0,-8	316 Stainless Steel
20320898	6.0	2350.0	+0,-8	316 Stainless Steel
20320904	6.0	2400.0	+0,-8	316 Stainless Steel
20320911	6.0	2450.0	+0,-8	316 Stainless Steel
20320928	6.0	2500.0	+0,-8	316 Stainless Steel
20320935	6.0	2550.0	+0,-8	316 Stainless Steel
20320942	6.0	2600.0	+0,-8	316 Stainless Steel
20320959	6.0	2650.0	+0,-8	316 Stainless Steel
20320966	6.0	2700.0	+0,-8	316 Stainless Steel
20320973	6.0	2750.0	+0,-8	316 Stainless Steel
20320980	6.0	2800.0	+0,-8	316 Stainless Steel
20320997	6.0	2850.0	+0,-8	316 Stainless Steel
20321000	6.0	2900.0	+0,-8	316 Stainless Steel
20321017	6.0	2950.0	+0,-8	316 Stainless Steel
20321024	6.0	3000.0	+0,-8	316 Stainless Steel
20321031	6.0	3050.0	+0,-8	316 Stainless Steel
20321048	6.0	3100.0	+0,-8	316 Stainless Steel
20321055	6.0	3150.0	+0,-8	316 Stainless Steel
20321062	6.0	3200.0	+0,-8	316 Stainless Steel
20321079	6.0	3250.0	+0,-8	316 Stainless Steel
20321086	6.0	3300.0	+0,-8	316 Stainless Steel
20321093	6.0	3350.0	+0,-8	316 Stainless Steel
20321109	6.0	3400.0	+0,-8	316 Stainless Steel
20321116	6.0	3450.0	+0,-8	316 Stainless Steel
20321123	6.0	3500.0	+0,-8	316 Stainless Steel
20321130	6.0	3550.0	+0,-8	316 Stainless Steel

Part Number	d1	l1	Tolerance μ tol. h6	Material
20321147	6.0	3600.0	+0,-8	316 Stainless Steel
20321154	6.0	3650.0	+0,-8	316 Stainless Steel
20321161	6.0	3700.0	+0,-8	316 Stainless Steel
20321178	6.0	3750.0	+0,-8	316 Stainless Steel
20321185	6.0	3800.0	+0,-8	316 Stainless Steel
20321192	6.0	3850.0	+0,-8	316 Stainless Steel
20321208	6.0	3900.0	+0,-8	316 Stainless Steel
20321215	6.0	3950.0	+0,-8	316 Stainless Steel
20321222	6.0	4000.0	+0,-8	316 Stainless Steel
20321239	6.0	4050.0	+0,-8	316 Stainless Steel
20321246	6.0	4100.0	+0,-8	316 Stainless Steel
20321253	6.0	4150.0	+0,-8	316 Stainless Steel
20321260	6.0	4200.0	+0,-8	316 Stainless Steel
20321277	6.0	4250.0	+0,-8	316 Stainless Steel
20321284	6.0	4300.0	+0,-8	316 Stainless Steel
20321291	6.0	4350.0	+0,-8	316 Stainless Steel
20321307	6.0	4400.0	+0,-8	316 Stainless Steel
20321314	6.0	4450.0	+0,-8	316 Stainless Steel
20321321	6.0	4500.0	+0,-8	316 Stainless Steel
20321338	6.0	4550.0	+0,-8	316 Stainless Steel
20321345	6.0	4600.0	+0,-8	316 Stainless Steel
20321352	6.0	4650.0	+0,-8	316 Stainless Steel
20321369	6.0	4700.0	+0,-8	316 Stainless Steel
20321376	6.0	4750.0	+0,-8	316 Stainless Steel
20321383	6.0	4800.0	+0,-8	316 Stainless Steel
20321390	6.0	4850.0	+0,-8	316 Stainless Steel

Stainless AISI 303/316 Shafts

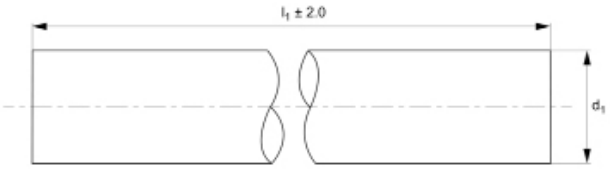



Part Number	d1	l1	Tolerance μ tol. h6	Material
20321406	6.0	4900.0	+0,-8	316 Stainless Steel
20321413	6.0	4950.0	+0,-8	316 Stainless Steel
20321420	6.0	5000.0	+0,-8	316 Stainless Steel
20321437	6.0	5050.0	+0,-8	316 Stainless Steel
20321444	6.0	5100.0	+0,-8	316 Stainless Steel
20321451	6.0	5150.0	+0,-8	316 Stainless Steel
20321468	6.0	5200.0	+0,-8	316 Stainless Steel
20321475	6.0	5250.0	+0,-8	316 Stainless Steel
20321482	6.0	5300.0	+0,-8	316 Stainless Steel
20321499	6.0	5350.0	+0,-8	316 Stainless Steel
20321505	6.0	5400.0	+0,-8	316 Stainless Steel
20321512	6.0	5450.0	+0,-8	316 Stainless Steel
20321529	6.0	5500.0	+0,-8	316 Stainless Steel
20321536	6.0	5550.0	+0,-8	316 Stainless Steel
20321543	6.0	5600.0	+0,-8	316 Stainless Steel
20321550	6.0	5650.0	+0,-8	316 Stainless Steel
20321567	6.0	5700.0	+0,-8	316 Stainless Steel
20321574	6.0	5750.0	+0,-8	316 Stainless Steel
20321581	6.0	5800.0	+0,-8	316 Stainless Steel
20321598	6.0	5850.0	+0,-8	316 Stainless Steel
20321604	6.0	5900.0	+0,-8	316 Stainless Steel
20321611	6.0	5950.0	+0,-8	316 Stainless Steel
20321628	6.0	6000.0	+0,-8	316 Stainless Steel
20321635	8.0	100.0	+0,-9	316 Stainless Steel
20321642	8.0	150.0	+0,-9	316 Stainless Steel
20321659	8.0	200.0	+0,-9	316 Stainless Steel

Part Number	d1	l1	Tolerance μ tol. h6	Material
20321666	8.0	250.0	+0,-9	316 Stainless Steel
20321673	8.0	300.0	+0,-9	316 Stainless Steel
20321680	8.0	350.0	+0,-9	316 Stainless Steel
20321697	8.0	400.0	+0,-9	316 Stainless Steel
20321703	8.0	450.0	+0,-9	316 Stainless Steel
20321710	8.0	500.0	+0,-9	316 Stainless Steel
20321727	8.0	550.0	+0,-9	316 Stainless Steel
20321734	8.0	600.0	+0,-9	316 Stainless Steel
20321741	8.0	650.0	+0,-9	316 Stainless Steel
20321758	8.0	700.0	+0,-9	316 Stainless Steel
20321765	8.0	750.0	+0,-9	316 Stainless Steel
20321772	8.0	800.0	+0,-9	316 Stainless Steel
20321789	8.0	850.0	+0,-9	316 Stainless Steel
20321796	8.0	900.0	+0,-9	316 Stainless Steel
20321802	8.0	950.0	+0,-9	316 Stainless Steel
20321819	8.0	1000.0	+0,-9	316 Stainless Steel
20321826	8.0	1050.0	+0,-9	316 Stainless Steel
20321833	8.0	1100.0	+0,-9	316 Stainless Steel
20321840	8.0	1150.0	+0,-9	316 Stainless Steel
20321857	8.0	1200.0	+0,-9	316 Stainless Steel
20321864	8.0	1250.0	+0,-9	316 Stainless Steel
20321871	8.0	1300.0	+0,-9	316 Stainless Steel
20321888	8.0	1350.0	+0,-9	316 Stainless Steel
20321895	8.0	1400.0	+0,-9	316 Stainless Steel
20321901	8.0	1450.0	+0,-9	316 Stainless Steel
20321918	8.0	1500.0	+0,-9	316 Stainless Steel

Stainless AISI 303/316 Shafts

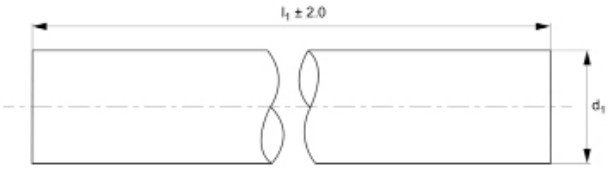



Part Number	d1	l1	Tolerance μ tol. h6	Material
20321925	8.0	1550.0	+0,-9	316 Stainless Steel
20321932	8.0	1600.0	+0,-9	316 Stainless Steel
20321949	8.0	1650.0	+0,-9	316 Stainless Steel
20321956	8.0	1700.0	+0,-9	316 Stainless Steel
20321963	8.0	1750.0	+0,-9	316 Stainless Steel
20321970	8.0	1800.0	+0,-9	316 Stainless Steel
20321987	8.0	1850.0	+0,-9	316 Stainless Steel
20321994	8.0	1900.0	+0,-9	316 Stainless Steel
20322007	8.0	1950.0	+0,-9	316 Stainless Steel
20322014	8.0	2000.0	+0,-9	316 Stainless Steel
20322021	8.0	2050.0	+0,-9	316 Stainless Steel
20322038	8.0	2100.0	+0,-9	316 Stainless Steel
20322045	8.0	2150.0	+0,-9	316 Stainless Steel
20322052	8.0	2200.0	+0,-9	316 Stainless Steel
20322069	8.0	2250.0	+0,-9	316 Stainless Steel
20322076	8.0	2300.0	+0,-9	316 Stainless Steel
20322083	8.0	2350.0	+0,-9	316 Stainless Steel
20322090	8.0	2400.0	+0,-9	316 Stainless Steel
20322106	8.0	2450.0	+0,-9	316 Stainless Steel
20322113	8.0	2500.0	+0,-9	316 Stainless Steel
20322120	8.0	2550.0	+0,-9	316 Stainless Steel
20322137	8.0	2600.0	+0,-9	316 Stainless Steel
20322144	8.0	2650.0	+0,-9	316 Stainless Steel
20322151	8.0	2700.0	+0,-9	316 Stainless Steel
20322168	8.0	2750.0	+0,-9	316 Stainless Steel
20322175	8.0	2800.0	+0,-9	316 Stainless Steel

Part Number	d1	l1	Tolerance μ tol. h6	Material
20322182	8.0	2850.0	+0,-9	316 Stainless Steel
20322199	8.0	2900.0	+0,-9	316 Stainless Steel
20322205	8.0	2950.0	+0,-9	316 Stainless Steel
20322212	8.0	3000.0	+0,-9	316 Stainless Steel
20322229	8.0	3050.0	+0,-9	316 Stainless Steel
20322236	8.0	3100.0	+0,-9	316 Stainless Steel
20322243	8.0	3150.0	+0,-9	316 Stainless Steel
20322250	8.0	3200.0	+0,-9	316 Stainless Steel
20322267	8.0	3250.0	+0,-9	316 Stainless Steel
20322274	8.0	3300.0	+0,-9	316 Stainless Steel
20322281	8.0	3350.0	+0,-9	316 Stainless Steel
20322298	8.0	3400.0	+0,-9	316 Stainless Steel
20322304	8.0	3450.0	+0,-9	316 Stainless Steel
20322311	8.0	3500.0	+0,-9	316 Stainless Steel
20322328	8.0	3550.0	+0,-9	316 Stainless Steel
20322335	8.0	3600.0	+0,-9	316 Stainless Steel
20322342	8.0	3650.0	+0,-9	316 Stainless Steel
20322359	8.0	3700.0	+0,-9	316 Stainless Steel
20322366	8.0	3750.0	+0,-9	316 Stainless Steel
20322373	8.0	3800.0	+0,-9	316 Stainless Steel
20322380	8.0	3850.0	+0,-9	316 Stainless Steel
20322397	8.0	3900.0	+0,-9	316 Stainless Steel
20322403	8.0	3950.0	+0,-9	316 Stainless Steel
20322410	8.0	4000.0	+0,-9	316 Stainless Steel
20322427	8.0	4050.0	+0,-9	316 Stainless Steel
20322434	8.0	4100.0	+0,-9	316 Stainless Steel

Stainless AISI 303/316 Shafts

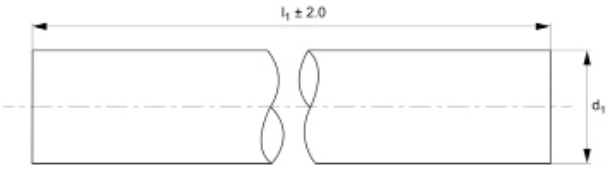



Part Number	d1	l1	Tolerance μ tol. h6	Material
20322441	8.0	4150.0	+0,-9	316 Stainless Steel
20322458	8.0	4200.0	+0,-9	316 Stainless Steel
20322465	8.0	4250.0	+0,-9	316 Stainless Steel
20322472	8.0	4300.0	+0,-9	316 Stainless Steel
20322489	8.0	4350.0	+0,-9	316 Stainless Steel
20322496	8.0	4400.0	+0,-9	316 Stainless Steel
20322502	8.0	4450.0	+0,-9	316 Stainless Steel
20322519	8.0	4500.0	+0,-9	316 Stainless Steel
20322526	8.0	4550.0	+0,-9	316 Stainless Steel
20322533	8.0	4600.0	+0,-9	316 Stainless Steel
20322540	8.0	4650.0	+0,-9	316 Stainless Steel
20322557	8.0	4700.0	+0,-9	316 Stainless Steel
20322564	8.0	4750.0	+0,-9	316 Stainless Steel
20322571	8.0	4800.0	+0,-9	316 Stainless Steel
20322588	8.0	4850.0	+0,-9	316 Stainless Steel
20322595	8.0	4900.0	+0,-9	316 Stainless Steel
20322601	8.0	4950.0	+0,-9	316 Stainless Steel
20322618	8.0	5000.0	+0,-9	316 Stainless Steel
20322625	8.0	5050.0	+0,-9	316 Stainless Steel
20322632	8.0	5100.0	+0,-9	316 Stainless Steel
20322649	8.0	5150.0	+0,-9	316 Stainless Steel
20322656	8.0	5200.0	+0,-9	316 Stainless Steel
20322663	8.0	5250.0	+0,-9	316 Stainless Steel
20322670	8.0	5300.0	+0,-9	316 Stainless Steel
20322687	8.0	5350.0	+0,-9	316 Stainless Steel
20322694	8.0	5400.0	+0,-9	316 Stainless Steel

Part Number	d1	l1	Tolerance μ tol. h6	Material
20322700	8.0	5450.0	+0,-9	316 Stainless Steel
20322717	8.0	5500.0	+0,-9	316 Stainless Steel
20322724	8.0	5550.0	+0,-9	316 Stainless Steel
20322731	8.0	5600.0	+0,-9	316 Stainless Steel
20322748	8.0	5650.0	+0,-9	316 Stainless Steel
20322755	8.0	5700.0	+0,-9	316 Stainless Steel
20322762	8.0	5750.0	+0,-9	316 Stainless Steel
20322779	8.0	5800.0	+0,-9	316 Stainless Steel
20322786	8.0	5850.0	+0,-9	316 Stainless Steel
20322793	8.0	5900.0	+0,-9	316 Stainless Steel
20322809	8.0	5950.0	+0,-9	316 Stainless Steel
20322816	8.0	6000.0	+0,-9	316 Stainless Steel
20322823	10.0	100.0	+0,-10	316 Stainless Steel
20322830	10.0	150.0	+0,-10	316 Stainless Steel
20322847	10.0	200.0	+0,-10	316 Stainless Steel
20322854	10.0	250.0	+0,-10	316 Stainless Steel
20322861	10.0	300.0	+0,-10	316 Stainless Steel
20322878	10.0	350.0	+0,-10	316 Stainless Steel
20322885	10.0	400.0	+0,-10	316 Stainless Steel
20322892	10.0	450.0	+0,-10	316 Stainless Steel
20322908	10.0	500.0	+0,-10	316 Stainless Steel
20322915	10.0	550.0	+0,-10	316 Stainless Steel
20322922	10.0	600.0	+0,-10	316 Stainless Steel
20322939	10.0	650.0	+0,-10	316 Stainless Steel
20322946	10.0	700.0	+0,-10	316 Stainless Steel
20322953	10.0	750.0	+0,-10	316 Stainless Steel

Stainless AISI 303/316 Shafts

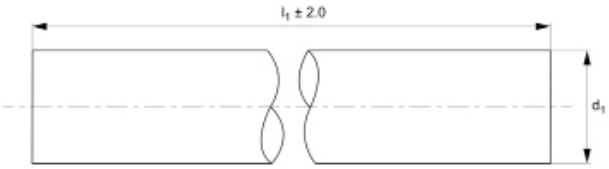



Part Number	d1	l1	Tolerance μ tol. h6	Material
20322960	10.0	800.0	+0,-10	316 Stainless Steel
20322977	10.0	850.0	+0,-10	316 Stainless Steel
20322984	10.0	900.0	+0,-10	316 Stainless Steel
20322991	10.0	950.0	+0,-10	316 Stainless Steel
20323004	10.0	1000.0	+0,-10	316 Stainless Steel
20323011	10.0	1050.0	+0,-10	316 Stainless Steel
20323028	10.0	1100.0	+0,-10	316 Stainless Steel
20323035	10.0	1150.0	+0,-10	316 Stainless Steel
20323042	10.0	1200.0	+0,-10	316 Stainless Steel
20323059	10.0	1250.0	+0,-10	316 Stainless Steel
20323066	10.0	1300.0	+0,-10	316 Stainless Steel
20323073	10.0	1350.0	+0,-10	316 Stainless Steel
20323080	10.0	1400.0	+0,-10	316 Stainless Steel
20323097	10.0	1450.0	+0,-10	316 Stainless Steel
20323103	10.0	1500.0	+0,-10	316 Stainless Steel
20323110	10.0	1550.0	+0,-10	316 Stainless Steel
20323127	10.0	1600.0	+0,-10	316 Stainless Steel
20323134	10.0	1650.0	+0,-10	316 Stainless Steel
20323141	10.0	1700.0	+0,-10	316 Stainless Steel
20323158	10.0	1750.0	+0,-10	316 Stainless Steel
20323165	10.0	1800.0	+0,-10	316 Stainless Steel
20323172	10.0	1850.0	+0,-10	316 Stainless Steel
20323189	10.0	1900.0	+0,-10	316 Stainless Steel
20323196	10.0	1950.0	+0,-10	316 Stainless Steel
20323202	10.0	2000.0	+0,-10	316 Stainless Steel
20323219	10.0	2050.0	+0,-10	316 Stainless Steel

Part Number	d1	l1	Tolerance μ tol. h6	Material
20323226	10.0	2100.0	+0,-10	316 Stainless Steel
20323233	10.0	2150.0	+0,-10	316 Stainless Steel
20323240	10.0	2200.0	+0,-10	316 Stainless Steel
20323257	10.0	2250.0	+0,-10	316 Stainless Steel
20323264	10.0	2300.0	+0,-10	316 Stainless Steel
20323271	10.0	2350.0	+0,-10	316 Stainless Steel
20323288	10.0	2400.0	+0,-10	316 Stainless Steel
20323295	10.0	2450.0	+0,-10	316 Stainless Steel
20323301	10.0	2500.0	+0,-10	316 Stainless Steel
20323318	10.0	2550.0	+0,-10	316 Stainless Steel
20323325	10.0	2600.0	+0,-10	316 Stainless Steel
20323332	10.0	2650.0	+0,-10	316 Stainless Steel
20323349	10.0	2700.0	+0,-10	316 Stainless Steel
20323356	10.0	2750.0	+0,-10	316 Stainless Steel
20323363	10.0	2800.0	+0,-10	316 Stainless Steel
20323370	10.0	2850.0	+0,-10	316 Stainless Steel
20323387	10.0	2900.0	+0,-10	316 Stainless Steel
20323394	10.0	2950.0	+0,-10	316 Stainless Steel
20323400	10.0	3000.0	+0,-10	316 Stainless Steel
20323417	10.0	3050.0	+0,-10	316 Stainless Steel
20323424	10.0	3100.0	+0,-10	316 Stainless Steel
20323431	10.0	3150.0	+0,-10	316 Stainless Steel
20323448	10.0	3200.0	+0,-10	316 Stainless Steel
20323455	10.0	3250.0	+0,-10	316 Stainless Steel
20323462	10.0	3300.0	+0,-10	316 Stainless Steel
20323479	10.0	3350.0	+0,-10	316 Stainless Steel

Stainless AISI 303/316 Shafts

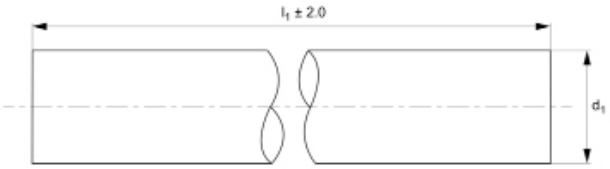



Part Number	d1	l1	Tolerance μ tol. h6	Material
20323486	10.0	3400.0	+0,-10	316 Stainless Steel
20323493	10.0	3450.0	+0,-10	316 Stainless Steel
20323509	10.0	3500.0	+0,-10	316 Stainless Steel
20323516	10.0	3550.0	+0,-10	316 Stainless Steel
20323523	10.0	3600.0	+0,-10	316 Stainless Steel
20323530	10.0	3650.0	+0,-10	316 Stainless Steel
20323547	10.0	3700.0	+0,-10	316 Stainless Steel
20323554	10.0	3750.0	+0,-10	316 Stainless Steel
20323561	10.0	3800.0	+0,-10	316 Stainless Steel
20323578	10.0	3850.0	+0,-10	316 Stainless Steel
20323585	10.0	3900.0	+0,-10	316 Stainless Steel
20323592	10.0	3950.0	+0,-10	316 Stainless Steel
20323608	10.0	4000.0	+0,-10	316 Stainless Steel
20323615	10.0	4050.0	+0,-10	316 Stainless Steel
20323622	10.0	4100.0	+0,-10	316 Stainless Steel
20323639	10.0	4150.0	+0,-10	316 Stainless Steel
20323646	10.0	4200.0	+0,-10	316 Stainless Steel
20323653	10.0	4250.0	+0,-10	316 Stainless Steel
20323660	10.0	4300.0	+0,-10	316 Stainless Steel
20323677	10.0	4350.0	+0,-10	316 Stainless Steel
20323684	10.0	4400.0	+0,-10	316 Stainless Steel
20323691	10.0	4450.0	+0,-10	316 Stainless Steel
20323707	10.0	4500.0	+0,-10	316 Stainless Steel
20323714	10.0	4550.0	+0,-10	316 Stainless Steel
20323721	10.0	4600.0	+0,-10	316 Stainless Steel
20323738	10.0	4650.0	+0,-10	316 Stainless Steel

Part Number	d1	l1	Tolerance μ tol. h6	Material
20323745	10.0	4700.0	+0,-10	316 Stainless Steel
20323752	10.0	4750.0	+0,-10	316 Stainless Steel
20323769	10.0	4800.0	+0,-10	316 Stainless Steel
20323776	10.0	4850.0	+0,-10	316 Stainless Steel
20323783	10.0	4900.0	+0,-10	316 Stainless Steel
20323790	10.0	4950.0	+0,-10	316 Stainless Steel
20323806	10.0	5000.0	+0,-10	316 Stainless Steel
20323813	10.0	5050.0	+0,-10	316 Stainless Steel
20323820	10.0	5100.0	+0,-10	316 Stainless Steel
20323837	10.0	5150.0	+0,-10	316 Stainless Steel
20323844	10.0	5200.0	+0,-10	316 Stainless Steel
20323851	10.0	5250.0	+0,-10	316 Stainless Steel
20323868	10.0	5300.0	+0,-10	316 Stainless Steel
20323875	10.0	5350.0	+0,-10	316 Stainless Steel
20323882	10.0	5400.0	+0,-10	316 Stainless Steel
20323899	10.0	5450.0	+0,-10	316 Stainless Steel
20323905	10.0	5500.0	+0,-10	316 Stainless Steel
20323912	10.0	5550.0	+0,-10	316 Stainless Steel
20323929	10.0	5600.0	+0,-10	316 Stainless Steel
20323936	10.0	5650.0	+0,-10	316 Stainless Steel
20323943	10.0	5700.0	+0,-10	316 Stainless Steel
20323950	10.0	5750.0	+0,-10	316 Stainless Steel
20323967	10.0	5800.0	+0,-10	316 Stainless Steel
20323974	10.0	5850.0	+0,-10	316 Stainless Steel
20323981	10.0	5900.0	+0,-10	316 Stainless Steel
20323998	10.0	5950.0	+0,-10	316 Stainless Steel

Stainless AISI 303/316 Shafts

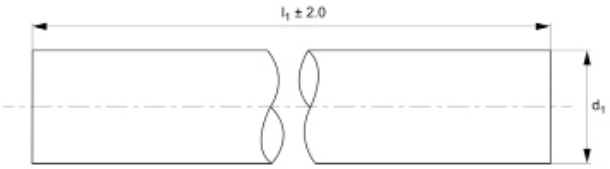



Part Number	d1	l1	Tolerance μ tol. h6	Material
20324001	10.0	6000.0	+0,-10	316 Stainless Steel
20324018	12.0	100.0	0.6	316 Stainless Steel
20324025	12.0	150.0	0.6	316 Stainless Steel
20324032	12.0	200.0	0.6	316 Stainless Steel
20324049	12.0	250.0	0.6	316 Stainless Steel
20324056	12.0	300.0	0.6	316 Stainless Steel
20324063	12.0	350.0	0.6	316 Stainless Steel
20324070	12.0	400.0	0.6	316 Stainless Steel
20324087	12.0	450.0	0.6	316 Stainless Steel
20324094	12.0	500.0	0.6	316 Stainless Steel
20324100	12.0	550.0	0.6	316 Stainless Steel
20324117	12.0	600.0	0.6	316 Stainless Steel
20324124	12.0	650.0	0.6	316 Stainless Steel
20324131	12.0	700.0	0.6	316 Stainless Steel
20324148	12.0	750.0	0.6	316 Stainless Steel
20324155	12.0	800.0	0.6	316 Stainless Steel
20324162	12.0	850.0	0.6	316 Stainless Steel
20324179	12.0	900.0	0.6	316 Stainless Steel
20324186	12.0	950.0	0.6	316 Stainless Steel
20324193	12.0	1000.0	0.6	316 Stainless Steel
20324209	12.0	1050.0	0.6	316 Stainless Steel
20324216	12.0	1100.0	0.6	316 Stainless Steel
20324223	12.0	1150.0	0.6	316 Stainless Steel
20324230	12.0	1200.0	0.6	316 Stainless Steel
20324247	12.0	1250.0	0.6	316 Stainless Steel
20324254	12.0	1300.0	0.6	316 Stainless Steel

Part Number	d1	l1	Tolerance μ tol. h6	Material
20324261	12.0	1350.0	0.6	316 Stainless Steel
20324278	12.0	1400.0	0.6	316 Stainless Steel
20324285	12.0	1450.0	0.6	316 Stainless Steel
20324292	12.0	1500.0	0.6	316 Stainless Steel
20324308	12.0	1550.0	0.6	316 Stainless Steel
20324315	12.0	1600.0	0.6	316 Stainless Steel
20324322	12.0	1650.0	0.6	316 Stainless Steel
20324339	12.0	1700.0	0.6	316 Stainless Steel
20324346	12.0	1750.0	0.6	316 Stainless Steel
20324353	12.0	1800.0	0.6	316 Stainless Steel
20324360	12.0	1850.0	0.6	316 Stainless Steel
20324377	12.0	1900.0	0.6	316 Stainless Steel
20324384	12.0	1950.0	0.6	316 Stainless Steel
20324391	12.0	2000.0	0.6	316 Stainless Steel
20324407	12.0	2050.0	0.6	316 Stainless Steel
20324414	12.0	2100.0	0.6	316 Stainless Steel
20324421	12.0	2150.0	0.6	316 Stainless Steel
20324438	12.0	2200.0	0.6	316 Stainless Steel
20324445	12.0	2250.0	0.6	316 Stainless Steel
20324452	12.0	2300.0	0.6	316 Stainless Steel
20324469	12.0	2350.0	0.6	316 Stainless Steel
20324476	12.0	2400.0	0.6	316 Stainless Steel
20324483	12.0	2450.0	0.6	316 Stainless Steel
20324490	12.0	2500.0	0.6	316 Stainless Steel
20324506	12.0	2550.0	0.6	316 Stainless Steel
20324513	12.0	2600.0	0.6	316 Stainless Steel

Stainless AISI 303/316 Shafts

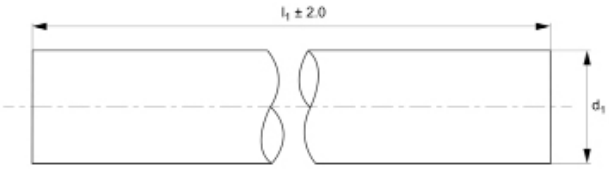



Part Number	d1	l1	Tolerance μ tol. h6	Material
20324520	12.0	2650.0	0.6	316 Stainless Steel
20324537	12.0	2700.0	0.6	316 Stainless Steel
20324544	12.0	2750.0	0.6	316 Stainless Steel
20324551	12.0	2800.0	0.6	316 Stainless Steel
20324568	12.0	2850.0	0.6	316 Stainless Steel
20324575	12.0	2900.0	0.6	316 Stainless Steel
20324582	12.0	2950.0	0.6	316 Stainless Steel
20324599	12.0	3000.0	0.6	316 Stainless Steel
20324605	12.0	3050.0	0.6	316 Stainless Steel
20324612	12.0	3100.0	0.6	316 Stainless Steel
20324629	12.0	3150.0	0.6	316 Stainless Steel
20324636	12.0	3200.0	0.6	316 Stainless Steel
20324643	12.0	3250.0	0.6	316 Stainless Steel
20324650	12.0	3300.0	0.6	316 Stainless Steel
20324667	12.0	3350.0	0.6	316 Stainless Steel
20324674	12.0	3400.0	0.6	316 Stainless Steel
20324681	12.0	3450.0	0.6	316 Stainless Steel
20324698	12.0	3500.0	0.6	316 Stainless Steel
20324704	12.0	3550.0	0.6	316 Stainless Steel
20324711	12.0	3600.0	0.6	316 Stainless Steel
20324728	12.0	3650.0	0.6	316 Stainless Steel
20324735	12.0	3700.0	0.6	316 Stainless Steel
20324742	12.0	3750.0	0.6	316 Stainless Steel
20324759	12.0	3800.0	0.6	316 Stainless Steel
20324766	12.0	3850.0	0.6	316 Stainless Steel
20324773	12.0	3900.0	0.6	316 Stainless Steel

Part Number	d1	l1	Tolerance μ tol. h6	Material
20324780	12.0	3950.0	0.6	316 Stainless Steel
20324797	12.0	4000.0	0.6	316 Stainless Steel
20324803	12.0	4050.0	0.6	316 Stainless Steel
20324810	12.0	4100.0	0.6	316 Stainless Steel
20324827	12.0	4150.0	0.6	316 Stainless Steel
20324834	12.0	4200.0	0.6	316 Stainless Steel
20324841	12.0	4250.0	0.6	316 Stainless Steel
20324858	12.0	4300.0	0.6	316 Stainless Steel
20324865	12.0	4350.0	0.6	316 Stainless Steel
20324872	12.0	4400.0	0.6	316 Stainless Steel
20324889	12.0	4450.0	0.6	316 Stainless Steel
20324896	12.0	4500.0	0.6	316 Stainless Steel
20324902	12.0	4550.0	0.6	316 Stainless Steel
20324919	12.0	4600.0	0.6	316 Stainless Steel
20324926	12.0	4650.0	0.6	316 Stainless Steel
20324933	12.0	4700.0	0.6	316 Stainless Steel
20324940	12.0	4750.0	0.6	316 Stainless Steel
20324957	12.0	4800.0	0.6	316 Stainless Steel
20324964	12.0	4850.0	0.6	316 Stainless Steel
20324971	12.0	4900.0	0.6	316 Stainless Steel
20324988	12.0	4950.0	0.6	316 Stainless Steel
20324995	12.0	5000.0	0.6	316 Stainless Steel
20325008	12.0	5050.0	0.6	316 Stainless Steel
20325015	12.0	5100.0	0.6	316 Stainless Steel
20325022	12.0	5150.0	0.6	316 Stainless Steel
20325039	12.0	5200.0	0.6	316 Stainless Steel

Stainless AISI 303/316 Shafts

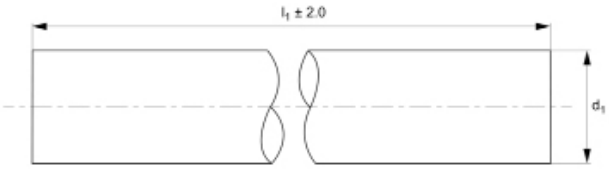



Part Number	d1	l1	Tolerance μ tol. h6	Material
20325046	12.0	5250.0	0.6	316 Stainless Steel
20325053	12.0	5300.0	0.6	316 Stainless Steel
20325060	12.0	5350.0	0.6	316 Stainless Steel
20325077	12.0	5400.0	0.6	316 Stainless Steel
20325084	12.0	5450.0	0.6	316 Stainless Steel
20325091	12.0	5500.0	0.6	316 Stainless Steel
20325107	12.0	5550.0	0.6	316 Stainless Steel
20325114	12.0	5600.0	0.6	316 Stainless Steel
20325121	12.0	5650.0	0.6	316 Stainless Steel
20325138	12.0	5700.0	0.6	316 Stainless Steel
20325145	12.0	5750.0	0.6	316 Stainless Steel
20325152	12.0	5800.0	0.6	316 Stainless Steel
20325169	12.0	5850.0	0.6	316 Stainless Steel
20325176	12.0	5900.0	0.6	316 Stainless Steel
20325183	12.0	5950.0	0.6	316 Stainless Steel
20325190	12.0	6000.0	0.6	316 Stainless Steel
20325206	16.0	100.0	0.6	316 Stainless Steel
20325213	16.0	150.0	0.6	316 Stainless Steel
20325220	16.0	200.0	0.6	316 Stainless Steel
20325237	16.0	250.0	0.6	316 Stainless Steel
20325244	16.0	300.0	0.6	316 Stainless Steel
20325251	16.0	350.0	0.6	316 Stainless Steel
20325268	16.0	400.0	0.6	316 Stainless Steel
20325275	16.0	450.0	0.6	316 Stainless Steel
20325282	16.0	500.0	0.6	316 Stainless Steel
20325299	16.0	550.0	0.6	316 Stainless Steel

Part Number	d1	l1	Tolerance μ tol. h6	Material
20325305	16.0	600.0	0.6	316 Stainless Steel
20325312	16.0	650.0	0.6	316 Stainless Steel
20325329	16.0	700.0	0.6	316 Stainless Steel
20325336	16.0	750.0	0.6	316 Stainless Steel
20325343	16.0	800.0	0.6	316 Stainless Steel
20325350	16.0	850.0	0.6	316 Stainless Steel
20325367	16.0	900.0	0.6	316 Stainless Steel
20325374	16.0	950.0	0.6	316 Stainless Steel
20325381	16.0	1000.0	0.6	316 Stainless Steel
20325398	16.0	1050.0	0.6	316 Stainless Steel
20325404	16.0	1100.0	0.6	316 Stainless Steel
20325411	16.0	1150.0	0.6	316 Stainless Steel
20325428	16.0	1200.0	0.6	316 Stainless Steel
20325435	16.0	1250.0	0.6	316 Stainless Steel
20325442	16.0	1300.0	0.6	316 Stainless Steel
20325459	16.0	1350.0	0.6	316 Stainless Steel
20325466	16.0	1400.0	0.6	316 Stainless Steel
20325473	16.0	1450.0	0.6	316 Stainless Steel
20325480	16.0	1500.0	0.6	316 Stainless Steel
20325497	16.0	1550.0	0.6	316 Stainless Steel
20325503	16.0	1600.0	0.6	316 Stainless Steel
20325510	16.0	1650.0	0.6	316 Stainless Steel
20325527	16.0	1700.0	0.6	316 Stainless Steel
20325534	16.0	1750.0	0.6	316 Stainless Steel
20325541	16.0	1800.0	0.6	316 Stainless Steel
20325558	16.0	1850.0	0.6	316 Stainless Steel

Stainless AISI 303/316 Shafts

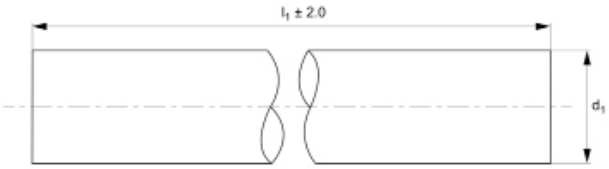



Part Number	d1	l1	Tolerance μ tol. h6	Material
20325565	16.0	1900.0	0.6	316 Stainless Steel
20325572	16.0	1950.0	0.6	316 Stainless Steel
20325589	16.0	2000.0	0.6	316 Stainless Steel
20325596	16.0	2050.0	0.6	316 Stainless Steel
20325602	16.0	2100.0	0.6	316 Stainless Steel
20325619	16.0	2150.0	0.6	316 Stainless Steel
20325626	16.0	2200.0	0.6	316 Stainless Steel
20325633	16.0	2250.0	0.6	316 Stainless Steel
20325640	16.0	2300.0	0.6	316 Stainless Steel
20325657	16.0	2350.0	0.6	316 Stainless Steel
20325664	16.0	2400.0	0.6	316 Stainless Steel
20325671	16.0	2450.0	0.6	316 Stainless Steel
20325688	16.0	2500.0	0.6	316 Stainless Steel
20325695	16.0	2550.0	0.6	316 Stainless Steel
20325701	16.0	2600.0	0.6	316 Stainless Steel
20325718	16.0	2650.0	0.6	316 Stainless Steel
20325725	16.0	2700.0	0.6	316 Stainless Steel
20325732	16.0	2750.0	0.6	316 Stainless Steel
20325749	16.0	2800.0	0.6	316 Stainless Steel
20325756	16.0	2850.0	0.6	316 Stainless Steel
20325763	16.0	2900.0	0.6	316 Stainless Steel
20325770	16.0	2950.0	0.6	316 Stainless Steel
20325787	16.0	3000.0	0.6	316 Stainless Steel
20325794	16.0	3050.0	0.6	316 Stainless Steel
20325800	16.0	3100.0	0.6	316 Stainless Steel
20325817	16.0	3150.0	0.6	316 Stainless Steel

Part Number	d1	l1	Tolerance μ tol. h6	Material
20325824	16.0	3200.0	0.6	316 Stainless Steel
20325831	16.0	3250.0	0.6	316 Stainless Steel
20325848	16.0	3300.0	0.6	316 Stainless Steel
20325855	16.0	3350.0	0.6	316 Stainless Steel
20325862	16.0	3400.0	0.6	316 Stainless Steel
20325879	16.0	3450.0	0.6	316 Stainless Steel
20325886	16.0	3500.0	0.6	316 Stainless Steel
20325893	16.0	3550.0	0.6	316 Stainless Steel
20325909	16.0	3600.0	0.6	316 Stainless Steel
20325916	16.0	3650.0	0.6	316 Stainless Steel
20325923	16.0	3700.0	0.6	316 Stainless Steel
20325930	16.0	3750.0	0.6	316 Stainless Steel
20325947	16.0	3800.0	0.6	316 Stainless Steel
20325954	16.0	3850.0	0.6	316 Stainless Steel
20325961	16.0	3900.0	0.6	316 Stainless Steel
20325978	16.0	3950.0	0.6	316 Stainless Steel
20325985	16.0	4000.0	0.6	316 Stainless Steel
20325992	16.0	4050.0	0.6	316 Stainless Steel
20326005	16.0	4100.0	0.6	316 Stainless Steel
20326012	16.0	4150.0	0.6	316 Stainless Steel
20326029	16.0	4200.0	0.6	316 Stainless Steel
20326036	16.0	4250.0	0.6	316 Stainless Steel
20326043	16.0	4300.0	0.6	316 Stainless Steel
20326050	16.0	4350.0	0.6	316 Stainless Steel
20326067	16.0	4400.0	0.6	316 Stainless Steel
20326074	16.0	4450.0	0.6	316 Stainless Steel

Stainless AISI 303/316 Shafts

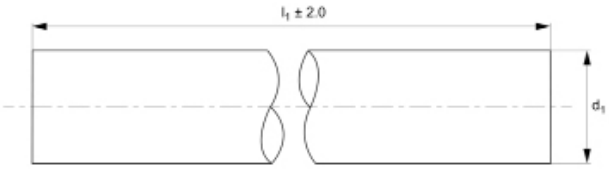



Part Number	d1	l1	Tolerance μ tol. h6	Material
20326081	16.0	4500.0	0.6	316 Stainless Steel
20326098	16.0	4550.0	0.6	316 Stainless Steel
20326104	16.0	4600.0	0.6	316 Stainless Steel
20326111	16.0	4650.0	0.6	316 Stainless Steel
20326128	16.0	4700.0	0.6	316 Stainless Steel
20326135	16.0	4750.0	0.6	316 Stainless Steel
20326142	16.0	4800.0	0.6	316 Stainless Steel
20326159	16.0	4850.0	0.6	316 Stainless Steel
20326166	16.0	4900.0	0.6	316 Stainless Steel
20326173	16.0	4950.0	0.6	316 Stainless Steel
20326180	16.0	5000.0	0.6	316 Stainless Steel
20326197	16.0	5050.0	0.6	316 Stainless Steel
20326203	16.0	5100.0	0.6	316 Stainless Steel
20326210	16.0	5150.0	0.6	316 Stainless Steel
20326227	16.0	5200.0	0.6	316 Stainless Steel
20326234	16.0	5250.0	0.6	316 Stainless Steel
20326241	16.0	5300.0	0.6	316 Stainless Steel
20326258	16.0	5350.0	0.6	316 Stainless Steel
20326265	16.0	5400.0	0.6	316 Stainless Steel
20326272	16.0	5450.0	0.6	316 Stainless Steel
20326289	16.0	5500.0	0.6	316 Stainless Steel
20326296	16.0	5550.0	0.6	316 Stainless Steel
20326302	16.0	5600.0	0.6	316 Stainless Steel
20326319	16.0	5650.0	0.6	316 Stainless Steel
20326326	16.0	5700.0	0.6	316 Stainless Steel
20326333	16.0	5750.0	0.6	316 Stainless Steel

Part Number	d1	l1	Tolerance μ tol. h6	Material
20326340	16.0	5800.0	0.6	316 Stainless Steel
20326357	16.0	5850.0	0.6	316 Stainless Steel
20326364	16.0	5900.0	0.6	316 Stainless Steel
20326371	16.0	5950.0	0.6	316 Stainless Steel
20326388	16.0	6000.0	0.6	316 Stainless Steel
20326395	20.0	100.0	+0,-13	316 Stainless Steel
20326401	20.0	150.0	+0,-13	316 Stainless Steel
20326418	20.0	200.0	+0,-13	316 Stainless Steel
20326425	20.0	250.0	+0,-13	316 Stainless Steel
20326432	20.0	300.0	+0,-13	316 Stainless Steel
20326449	20.0	350.0	+0,-13	316 Stainless Steel
20326456	20.0	400.0	+0,-13	316 Stainless Steel
20326463	20.0	450.0	+0,-13	316 Stainless Steel
20326470	20.0	500.0	+0,-13	316 Stainless Steel
20326487	20.0	550.0	+0,-13	316 Stainless Steel
20326494	20.0	600.0	+0,-13	316 Stainless Steel
20326500	20.0	650.0	+0,-13	316 Stainless Steel
20326517	20.0	700.0	+0,-13	316 Stainless Steel
20326524	20.0	750.0	+0,-13	316 Stainless Steel
20326531	20.0	800.0	+0,-13	316 Stainless Steel
20326548	20.0	850.0	+0,-13	316 Stainless Steel
20326555	20.0	900.0	+0,-13	316 Stainless Steel
20326562	20.0	950.0	+0,-13	316 Stainless Steel
20326579	20.0	1000.0	+0,-13	316 Stainless Steel
20326586	20.0	1050.0	+0,-13	316 Stainless Steel
20326593	20.0	1100.0	+0,-13	316 Stainless Steel

Stainless AISI 303/316 Shafts

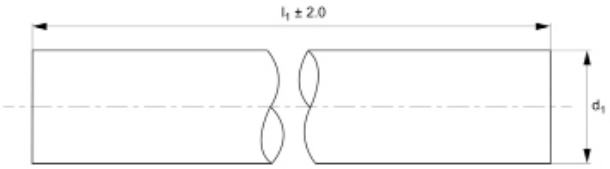



Part Number	d1	l1	Tolerance μ tol. h6	Material
20326609	20.0	1150.0	+0,-13	316 Stainless Steel
20326616	20.0	1200.0	+0,-13	316 Stainless Steel
20326623	20.0	1250.0	+0,-13	316 Stainless Steel
20326630	20.0	1300.0	+0,-13	316 Stainless Steel
20326647	20.0	1350.0	+0,-13	316 Stainless Steel
20326654	20.0	1400.0	+0,-13	316 Stainless Steel
20326661	20.0	1450.0	+0,-13	316 Stainless Steel
20326678	20.0	1500.0	+0,-13	316 Stainless Steel
20326685	20.0	1550.0	+0,-13	316 Stainless Steel
20326692	20.0	1600.0	+0,-13	316 Stainless Steel
20326708	20.0	1650.0	+0,-13	316 Stainless Steel
20326715	20.0	1700.0	+0,-13	316 Stainless Steel
20326722	20.0	1750.0	+0,-13	316 Stainless Steel
20326739	20.0	1800.0	+0,-13	316 Stainless Steel
20326746	20.0	1850.0	+0,-13	316 Stainless Steel
20326753	20.0	1900.0	+0,-13	316 Stainless Steel
20326760	20.0	1950.0	+0,-13	316 Stainless Steel
20326777	20.0	2000.0	+0,-13	316 Stainless Steel
20326784	20.0	2050.0	+0,-13	316 Stainless Steel
20326791	20.0	2100.0	+0,-13	316 Stainless Steel
20326807	20.0	2150.0	+0,-13	316 Stainless Steel
20326814	20.0	2200.0	+0,-13	316 Stainless Steel
20326821	20.0	2250.0	+0,-13	316 Stainless Steel
20326838	20.0	2300.0	+0,-13	316 Stainless Steel
20326845	20.0	2350.0	+0,-13	316 Stainless Steel
20326852	20.0	2400.0	+0,-13	316 Stainless Steel

Part Number	d1	l1	Tolerance μ tol. h6	Material
20326869	20.0	2450.0	+0,-13	316 Stainless Steel
20326876	20.0	2500.0	+0,-13	316 Stainless Steel
20326883	20.0	2550.0	+0,-13	316 Stainless Steel
20326890	20.0	2600.0	+0,-13	316 Stainless Steel
20326906	20.0	2650.0	+0,-13	316 Stainless Steel
20326913	20.0	2700.0	+0,-13	316 Stainless Steel
20326920	20.0	2750.0	+0,-13	316 Stainless Steel
20326937	20.0	2800.0	+0,-13	316 Stainless Steel
20326944	20.0	2850.0	+0,-13	316 Stainless Steel
20326951	20.0	2900.0	+0,-13	316 Stainless Steel
20326968	20.0	2950.0	+0,-13	316 Stainless Steel
20326975	20.0	3000.0	+0,-13	316 Stainless Steel
20326982	20.0	3050.0	+0,-13	316 Stainless Steel
20326999	20.0	3100.0	+0,-13	316 Stainless Steel
20327002	20.0	3150.0	+0,-13	316 Stainless Steel
20327019	20.0	3200.0	+0,-13	316 Stainless Steel
20327026	20.0	3250.0	+0,-13	316 Stainless Steel
20327033	20.0	3300.0	+0,-13	316 Stainless Steel
20327040	20.0	3350.0	+0,-13	316 Stainless Steel
20327057	20.0	3400.0	+0,-13	316 Stainless Steel
20327064	20.0	3450.0	+0,-13	316 Stainless Steel
20327071	20.0	3500.0	+0,-13	316 Stainless Steel
20327088	20.0	3550.0	+0,-13	316 Stainless Steel
20327095	20.0	3600.0	+0,-13	316 Stainless Steel
20327101	20.0	3650.0	+0,-13	316 Stainless Steel
20327118	20.0	3700.0	+0,-13	316 Stainless Steel

Stainless AISI 303/316 Shafts

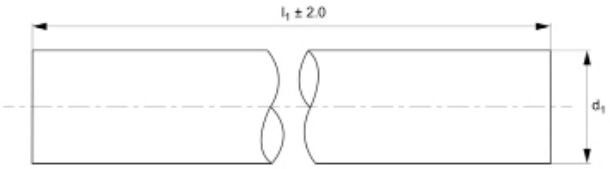



Part Number	d1	l1	Tolerance μ tol. h6	Material
20327125	20.0	3750.0	+0,-13	316 Stainless Steel
20327132	20.0	3800.0	+0,-13	316 Stainless Steel
20327149	20.0	3850.0	+0,-13	316 Stainless Steel
20327156	20.0	3900.0	+0,-13	316 Stainless Steel
20327163	20.0	3950.0	+0,-13	316 Stainless Steel
20327170	20.0	4000.0	+0,-13	316 Stainless Steel
20327187	20.0	4050.0	+0,-13	316 Stainless Steel
20327194	20.0	4100.0	+0,-13	316 Stainless Steel
20327200	20.0	4150.0	+0,-13	316 Stainless Steel
20327217	20.0	4200.0	+0,-13	316 Stainless Steel
20327224	20.0	4250.0	+0,-13	316 Stainless Steel
20327231	20.0	4300.0	+0,-13	316 Stainless Steel
20327248	20.0	4350.0	+0,-13	316 Stainless Steel
20327255	20.0	4400.0	+0,-13	316 Stainless Steel
20327262	20.0	4450.0	+0,-13	316 Stainless Steel
20327279	20.0	4500.0	+0,-13	316 Stainless Steel
20327286	20.0	4550.0	+0,-13	316 Stainless Steel
20327293	20.0	4600.0	+0,-13	316 Stainless Steel
20327309	20.0	4650.0	+0,-13	316 Stainless Steel
20327316	20.0	4700.0	+0,-13	316 Stainless Steel
20327323	20.0	4750.0	+0,-13	316 Stainless Steel
20327330	20.0	4800.0	+0,-13	316 Stainless Steel
20327347	20.0	4850.0	+0,-13	316 Stainless Steel
20327354	20.0	4900.0	+0,-13	316 Stainless Steel
20327361	20.0	4950.0	+0,-13	316 Stainless Steel
20327378	20.0	5000.0	+0,-13	316 Stainless Steel

Part Number	d1	l1	Tolerance μ tol. h6	Material
20327385	20.0	5050.0	+0,-13	316 Stainless Steel
20327392	20.0	5100.0	+0,-13	316 Stainless Steel
20327408	20.0	5150.0	+0,-13	316 Stainless Steel
20327415	20.0	5200.0	+0,-13	316 Stainless Steel
20327422	20.0	5250.0	+0,-13	316 Stainless Steel
20327439	20.0	5300.0	+0,-13	316 Stainless Steel
20327446	20.0	5350.0	+0,-13	316 Stainless Steel
20327453	20.0	5400.0	+0,-13	316 Stainless Steel
20327460	20.0	5450.0	+0,-13	316 Stainless Steel
20327477	20.0	5500.0	+0,-13	316 Stainless Steel
20327484	20.0	5550.0	+0,-13	316 Stainless Steel
20327491	20.0	5600.0	+0,-13	316 Stainless Steel
20327507	20.0	5650.0	+0,-13	316 Stainless Steel
20327514	20.0	5700.0	+0,-13	316 Stainless Steel
20327521	20.0	5750.0	+0,-13	316 Stainless Steel
20327538	20.0	5800.0	+0,-13	316 Stainless Steel
20327545	20.0	5850.0	+0,-13	316 Stainless Steel
20327552	20.0	5900.0	+0,-13	316 Stainless Steel
20327569	20.0	5950.0	+0,-13	316 Stainless Steel
20327576	20.0	6000.0	+0,-13	316 Stainless Steel
20327583	25.0	100.0	+0,-13	316 Stainless Steel
20327590	25.0	150.0	+0,-13	316 Stainless Steel
20327606	25.0	200.0	+0,-13	316 Stainless Steel
20327613	25.0	250.0	+0,-13	316 Stainless Steel
20327620	25.0	300.0	+0,-13	316 Stainless Steel
20327637	25.0	350.0	+0,-13	316 Stainless Steel

Stainless AISI 303/316 Shafts

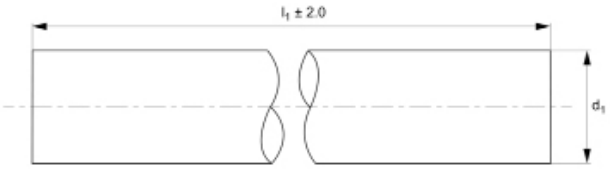



Part Number	d1	l1	Tolerance μ tol. h6	Material
20327644	25.0	400.0	+0,-13	316 Stainless Steel
20327651	25.0	450.0	+0,-13	316 Stainless Steel
20327668	25.0	500.0	+0,-13	316 Stainless Steel
20327675	25.0	550.0	+0,-13	316 Stainless Steel
20327682	25.0	600.0	+0,-13	316 Stainless Steel
20327699	25.0	650.0	+0,-13	316 Stainless Steel
20327705	25.0	700.0	+0,-13	316 Stainless Steel
20327712	25.0	750.0	+0,-13	316 Stainless Steel
20327729	25.0	800.0	+0,-13	316 Stainless Steel
20327736	25.0	850.0	+0,-13	316 Stainless Steel
20327743	25.0	900.0	+0,-13	316 Stainless Steel
20327750	25.0	950.0	+0,-13	316 Stainless Steel
20327767	25.0	1000.0	+0,-13	316 Stainless Steel
20327774	25.0	1050.0	+0,-13	316 Stainless Steel
20327781	25.0	1100.0	+0,-13	316 Stainless Steel
20327798	25.0	1150.0	+0,-13	316 Stainless Steel
20327804	25.0	1200.0	+0,-13	316 Stainless Steel
20327811	25.0	1250.0	+0,-13	316 Stainless Steel
20327828	25.0	1300.0	+0,-13	316 Stainless Steel
20327835	25.0	1350.0	+0,-13	316 Stainless Steel
20327842	25.0	1400.0	+0,-13	316 Stainless Steel
20327859	25.0	1450.0	+0,-13	316 Stainless Steel
20327866	25.0	1500.0	+0,-13	316 Stainless Steel
20327873	25.0	1550.0	+0,-13	316 Stainless Steel
20327880	25.0	1600.0	+0,-13	316 Stainless Steel
20327897	25.0	1650.0	+0,-13	316 Stainless Steel

Part Number	d1	l1	Tolerance μ tol. h6	Material
20327903	25.0	1700.0	+0,-13	316 Stainless Steel
20327910	25.0	1750.0	+0,-13	316 Stainless Steel
20327927	25.0	1800.0	+0,-13	316 Stainless Steel
20327934	25.0	1850.0	+0,-13	316 Stainless Steel
20327941	25.0	1900.0	+0,-13	316 Stainless Steel
20327958	25.0	1950.0	+0,-13	316 Stainless Steel
20327965	25.0	2000.0	+0,-13	316 Stainless Steel
20327972	25.0	2050.0	+0,-13	316 Stainless Steel
20327989	25.0	2100.0	+0,-13	316 Stainless Steel
20327996	25.0	2150.0	+0,-13	316 Stainless Steel
20328009	25.0	2200.0	+0,-13	316 Stainless Steel
20328016	25.0	2250.0	+0,-13	316 Stainless Steel
20328023	25.0	2300.0	+0,-13	316 Stainless Steel
20328030	25.0	2350.0	+0,-13	316 Stainless Steel
20328047	25.0	2400.0	+0,-13	316 Stainless Steel
20328054	25.0	2450.0	+0,-13	316 Stainless Steel
20328061	25.0	2500.0	+0,-13	316 Stainless Steel
20328078	25.0	2550.0	+0,-13	316 Stainless Steel
20328085	25.0	2600.0	+0,-13	316 Stainless Steel
20328092	25.0	2650.0	+0,-13	316 Stainless Steel
20328108	25.0	2700.0	+0,-13	316 Stainless Steel
20328115	25.0	2750.0	+0,-13	316 Stainless Steel
20328122	25.0	2800.0	+0,-13	316 Stainless Steel
20328139	25.0	2850.0	+0,-13	316 Stainless Steel
20328146	25.0	2900.0	+0,-13	316 Stainless Steel
20328153	25.0	2950.0	+0,-13	316 Stainless Steel

Stainless AISI 303/316 Shafts

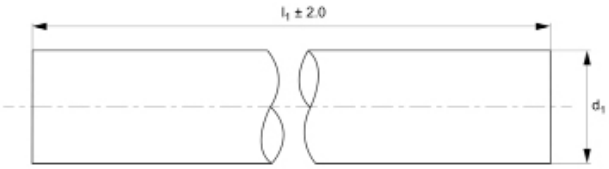



Part Number	d1	l1	Tolerance μ tol. h6	Material
20328160	25.0	3000.0	+0,-13	316 Stainless Steel
20328177	25.0	3050.0	+0,-13	316 Stainless Steel
20328184	25.0	3100.0	+0,-13	316 Stainless Steel
20328191	25.0	3150.0	+0,-13	316 Stainless Steel
20328207	25.0	3200.0	+0,-13	316 Stainless Steel
20328214	25.0	3250.0	+0,-13	316 Stainless Steel
20328221	25.0	3300.0	+0,-13	316 Stainless Steel
20328238	25.0	3350.0	+0,-13	316 Stainless Steel
20328245	25.0	3400.0	+0,-13	316 Stainless Steel
20328252	25.0	3450.0	+0,-13	316 Stainless Steel
20328269	25.0	3500.0	+0,-13	316 Stainless Steel
20328276	25.0	3550.0	+0,-13	316 Stainless Steel
20328283	25.0	3600.0	+0,-13	316 Stainless Steel
20328290	25.0	3650.0	+0,-13	316 Stainless Steel
20328306	25.0	3700.0	+0,-13	316 Stainless Steel
20328313	25.0	3750.0	+0,-13	316 Stainless Steel
20328320	25.0	3800.0	+0,-13	316 Stainless Steel
20328337	25.0	3850.0	+0,-13	316 Stainless Steel
20328344	25.0	3900.0	+0,-13	316 Stainless Steel
20328351	25.0	3950.0	+0,-13	316 Stainless Steel
20328368	25.0	4000.0	+0,-13	316 Stainless Steel
20328375	25.0	4050.0	+0,-13	316 Stainless Steel
20328382	25.0	4100.0	+0,-13	316 Stainless Steel
20328399	25.0	4150.0	+0,-13	316 Stainless Steel
20328405	25.0	4200.0	+0,-13	316 Stainless Steel
20328412	25.0	4250.0	+0,-13	316 Stainless Steel

Part Number	d1	l1	Tolerance μ tol. h6	Material
20328429	25.0	4300.0	+0,-13	316 Stainless Steel
20328436	25.0	4350.0	+0,-13	316 Stainless Steel
20328443	25.0	4400.0	+0,-13	316 Stainless Steel
20328450	25.0	4450.0	+0,-13	316 Stainless Steel
20328467	25.0	4500.0	+0,-13	316 Stainless Steel
20328474	25.0	4550.0	+0,-13	316 Stainless Steel
20328481	25.0	4600.0	+0,-13	316 Stainless Steel
20328498	25.0	4650.0	+0,-13	316 Stainless Steel
20328504	25.0	4700.0	+0,-13	316 Stainless Steel
20328511	25.0	4750.0	+0,-13	316 Stainless Steel
20328528	25.0	4800.0	+0,-13	316 Stainless Steel
20328535	25.0	4850.0	+0,-13	316 Stainless Steel
20328542	25.0	4900.0	+0,-13	316 Stainless Steel
20328559	25.0	4950.0	+0,-13	316 Stainless Steel
20328566	25.0	5000.0	+0,-13	316 Stainless Steel
20328573	25.0	5050.0	+0,-13	316 Stainless Steel
20328580	25.0	5100.0	+0,-13	316 Stainless Steel
20328597	25.0	5150.0	+0,-13	316 Stainless Steel
20328603	25.0	5200.0	+0,-13	316 Stainless Steel
20328610	25.0	5250.0	+0,-13	316 Stainless Steel
20328627	25.0	5300.0	+0,-13	316 Stainless Steel
20328634	25.0	5350.0	+0,-13	316 Stainless Steel
20328641	25.0	5400.0	+0,-13	316 Stainless Steel
20328658	25.0	5450.0	+0,-13	316 Stainless Steel
20328665	25.0	5500.0	+0,-13	316 Stainless Steel
20328672	25.0	5550.0	+0,-13	316 Stainless Steel

Stainless AISI 303/316 Shafts

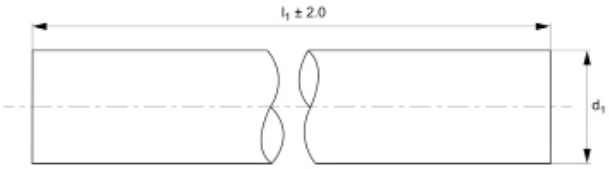



Part Number	d1	l1	Tolerance μ tol. h6	Material
20328689	25.0	5600.0	+0,-13	316 Stainless Steel
20328696	25.0	5650.0	+0,-13	316 Stainless Steel
20328702	25.0	5700.0	+0,-13	316 Stainless Steel
20328719	25.0	5750.0	+0,-13	316 Stainless Steel
20328726	25.0	5800.0	+0,-13	316 Stainless Steel
20328733	25.0	5850.0	+0,-13	316 Stainless Steel
20328740	25.0	5900.0	+0,-13	316 Stainless Steel
20328757	25.0	5950.0	+0,-13	316 Stainless Steel
20328764	25.0	6000.0	+0,-13	316 Stainless Steel
20328771	30.0	100.0	+0,-13	316 Stainless Steel
20328788	30.0	150.0	+0,-13	316 Stainless Steel
20328795	30.0	200.0	+0,-13	316 Stainless Steel
20328801	30.0	250.0	+0,-13	316 Stainless Steel
20328818	30.0	300.0	+0,-13	316 Stainless Steel
20328825	30.0	350.0	+0,-13	316 Stainless Steel
20328832	30.0	400.0	+0,-13	316 Stainless Steel
20328849	30.0	450.0	+0,-13	316 Stainless Steel
20328856	30.0	500.0	+0,-13	316 Stainless Steel
20328863	30.0	550.0	+0,-13	316 Stainless Steel
20328870	30.0	600.0	+0,-13	316 Stainless Steel
20328887	30.0	650.0	+0,-13	316 Stainless Steel
20328894	30.0	700.0	+0,-13	316 Stainless Steel
20328900	30.0	750.0	+0,-13	316 Stainless Steel
20328917	30.0	800.0	+0,-13	316 Stainless Steel
20328924	30.0	850.0	+0,-13	316 Stainless Steel
20328931	30.0	900.0	+0,-13	316 Stainless Steel

Part Number	d1	l1	Tolerance μ tol. h6	Material
20328948	30.0	950.0	+0,-13	316 Stainless Steel
20328955	30.0	1000.0	+0,-13	316 Stainless Steel
20328962	30.0	1050.0	+0,-13	316 Stainless Steel
20328979	30.0	1100.0	+0,-13	316 Stainless Steel
20328986	30.0	1150.0	+0,-13	316 Stainless Steel
20328993	30.0	1200.0	+0,-13	316 Stainless Steel
20329006	30.0	1250.0	+0,-13	316 Stainless Steel
20329013	30.0	1300.0	+0,-13	316 Stainless Steel
20329020	30.0	1350.0	+0,-13	316 Stainless Steel
20329037	30.0	1400.0	+0,-13	316 Stainless Steel
20329044	30.0	1450.0	+0,-13	316 Stainless Steel
20329051	30.0	1500.0	+0,-13	316 Stainless Steel
20329068	30.0	1550.0	+0,-13	316 Stainless Steel
20329075	30.0	1600.0	+0,-13	316 Stainless Steel
20329082	30.0	1650.0	+0,-13	316 Stainless Steel
20329099	30.0	1700.0	+0,-13	316 Stainless Steel
20329105	30.0	1750.0	+0,-13	316 Stainless Steel
20329112	30.0	1800.0	+0,-13	316 Stainless Steel
20329129	30.0	1850.0	+0,-13	316 Stainless Steel
20329136	30.0	1900.0	+0,-13	316 Stainless Steel
20329143	30.0	1950.0	+0,-13	316 Stainless Steel
20329150	30.0	2000.0	+0,-13	316 Stainless Steel
20329167	30.0	2050.0	+0,-13	316 Stainless Steel
20329174	30.0	2100.0	+0,-13	316 Stainless Steel
20329181	30.0	2150.0	+0,-13	316 Stainless Steel
20329198	30.0	2200.0	+0,-13	316 Stainless Steel

Stainless AISI 303/316 Shafts

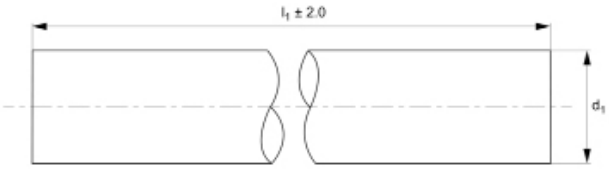



Part Number	d1	l1	Tolerance μ tol. h6	Material
20329204	30.0	2250.0	+0,-13	316 Stainless Steel
20329211	30.0	2300.0	+0,-13	316 Stainless Steel
20329228	30.0	2350.0	+0,-13	316 Stainless Steel
20329235	30.0	2400.0	+0,-13	316 Stainless Steel
20329242	30.0	2450.0	+0,-13	316 Stainless Steel
20329259	30.0	2500.0	+0,-13	316 Stainless Steel
20329266	30.0	2550.0	+0,-13	316 Stainless Steel
20329273	30.0	2600.0	+0,-13	316 Stainless Steel
20329280	30.0	2650.0	+0,-13	316 Stainless Steel
20329297	30.0	2700.0	+0,-13	316 Stainless Steel
20329303	30.0	2750.0	+0,-13	316 Stainless Steel
20329310	30.0	2800.0	+0,-13	316 Stainless Steel
20329327	30.0	2850.0	+0,-13	316 Stainless Steel
20329334	30.0	2900.0	+0,-13	316 Stainless Steel
20329341	30.0	2950.0	+0,-13	316 Stainless Steel
20329358	30.0	3000.0	+0,-13	316 Stainless Steel
20329365	30.0	3050.0	+0,-13	316 Stainless Steel
20329372	30.0	3100.0	+0,-13	316 Stainless Steel
20329389	30.0	3150.0	+0,-13	316 Stainless Steel
20329396	30.0	3200.0	+0,-13	316 Stainless Steel
20329402	30.0	3250.0	+0,-13	316 Stainless Steel
20329419	30.0	3300.0	+0,-13	316 Stainless Steel
20329426	30.0	3350.0	+0,-13	316 Stainless Steel
20329433	30.0	3400.0	+0,-13	316 Stainless Steel
20329440	30.0	3450.0	+0,-13	316 Stainless Steel
20329457	30.0	3500.0	+0,-13	316 Stainless Steel

Part Number	d1	l1	Tolerance μ tol. h6	Material
20329464	30.0	3550.0	+0,-13	316 Stainless Steel
20329471	30.0	3600.0	+0,-13	316 Stainless Steel
20329488	30.0	3650.0	+0,-13	316 Stainless Steel
20329495	30.0	3700.0	+0,-13	316 Stainless Steel
20329501	30.0	3750.0	+0,-13	316 Stainless Steel
20329518	30.0	3800.0	+0,-13	316 Stainless Steel
20329525	30.0	3850.0	+0,-13	316 Stainless Steel
20329532	30.0	3900.0	+0,-13	316 Stainless Steel
20329549	30.0	3950.0	+0,-13	316 Stainless Steel
20329556	30.0	4000.0	+0,-13	316 Stainless Steel
20329563	30.0	4050.0	+0,-13	316 Stainless Steel
20329570	30.0	4100.0	+0,-13	316 Stainless Steel
20329587	30.0	4150.0	+0,-13	316 Stainless Steel
20329594	30.0	4200.0	+0,-13	316 Stainless Steel
20329600	30.0	4250.0	+0,-13	316 Stainless Steel
20329617	30.0	4300.0	+0,-13	316 Stainless Steel
20329624	30.0	4350.0	+0,-13	316 Stainless Steel
20329631	30.0	4400.0	+0,-13	316 Stainless Steel
20329648	30.0	4450.0	+0,-13	316 Stainless Steel
20329655	30.0	4500.0	+0,-13	316 Stainless Steel
20329662	30.0	4550.0	+0,-13	316 Stainless Steel
20329679	30.0	4600.0	+0,-13	316 Stainless Steel
20329686	30.0	4650.0	+0,-13	316 Stainless Steel
20329693	30.0	4700.0	+0,-13	316 Stainless Steel
20329709	30.0	4750.0	+0,-13	316 Stainless Steel
20329716	30.0	4800.0	+0,-13	316 Stainless Steel

Stainless AISI 303/316 Shafts

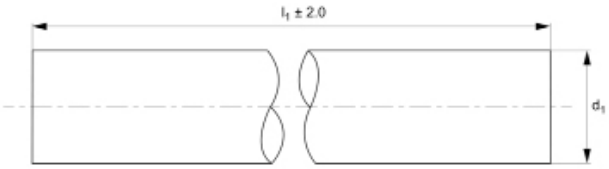



Part Number	d1	l1	Tolerance μ tol. h6	Material
20329723	30.0	4850.0	+0,-13	316 Stainless Steel
20329730	30.0	4900.0	+0,-13	316 Stainless Steel
20329747	30.0	4950.0	+0,-13	316 Stainless Steel
20329754	30.0	5000.0	+0,-13	316 Stainless Steel
20329761	30.0	5050.0	+0,-13	316 Stainless Steel
20329778	30.0	5100.0	+0,-13	316 Stainless Steel
20329785	30.0	5150.0	+0,-13	316 Stainless Steel
20329792	30.0	5200.0	+0,-13	316 Stainless Steel
20329808	30.0	5250.0	+0,-13	316 Stainless Steel
20329815	30.0	5300.0	+0,-13	316 Stainless Steel
20329822	30.0	5350.0	+0,-13	316 Stainless Steel
20329839	30.0	5400.0	+0,-13	316 Stainless Steel
20329846	30.0	5450.0	+0,-13	316 Stainless Steel
20329853	30.0	5500.0	+0,-13	316 Stainless Steel
20329860	30.0	5550.0	+0,-13	316 Stainless Steel
20329877	30.0	5600.0	+0,-13	316 Stainless Steel
20329884	30.0	5650.0	+0,-13	316 Stainless Steel
20329891	30.0	5700.0	+0,-13	316 Stainless Steel
20329907	30.0	5750.0	+0,-13	316 Stainless Steel
20329914	30.0	5800.0	+0,-13	316 Stainless Steel
20329921	30.0	5850.0	+0,-13	316 Stainless Steel
20329938	30.0	5900.0	+0,-13	316 Stainless Steel
20329945	30.0	5950.0	+0,-13	316 Stainless Steel
20329952	30.0	6000.0	+0,-13	316 Stainless Steel
20329969	40.0	100.0	+0,-16	316 Stainless Steel
20329976	40.0	150.0	+0,-16	316 Stainless Steel

Part Number	d1	l1	Tolerance μ tol. h6	Material
20329983	40.0	200.0	+0,-16	316 Stainless Steel
20329990	40.0	250.0	+0,-16	316 Stainless Steel
20330002	40.0	300.0	+0,-16	316 Stainless Steel
20330019	40.0	350.0	+0,-16	316 Stainless Steel
20330026	40.0	400.0	+0,-16	316 Stainless Steel
20330033	40.0	450.0	+0,-16	316 Stainless Steel
20330040	40.0	500.0	+0,-16	316 Stainless Steel
20330057	40.0	550.0	+0,-16	316 Stainless Steel
20330064	40.0	600.0	+0,-16	316 Stainless Steel
20330071	40.0	650.0	+0,-16	316 Stainless Steel
20330088	40.0	700.0	+0,-16	316 Stainless Steel
20330095	40.0	750.0	+0,-16	316 Stainless Steel
20330101	40.0	800.0	+0,-16	316 Stainless Steel
20330118	40.0	850.0	+0,-16	316 Stainless Steel
20330125	40.0	900.0	+0,-16	316 Stainless Steel
20330132	40.0	950.0	+0,-16	316 Stainless Steel
20330149	40.0	1000.0	+0,-16	316 Stainless Steel
20330156	40.0	1050.0	+0,-16	316 Stainless Steel
20330163	40.0	1100.0	+0,-16	316 Stainless Steel
20330170	40.0	1150.0	+0,-16	316 Stainless Steel
20330187	40.0	1200.0	+0,-16	316 Stainless Steel
20330194	40.0	1250.0	+0,-16	316 Stainless Steel
20330200	40.0	1300.0	+0,-16	316 Stainless Steel
20330217	40.0	1350.0	+0,-16	316 Stainless Steel
20330224	40.0	1400.0	+0,-16	316 Stainless Steel
20330231	40.0	1450.0	+0,-16	316 Stainless Steel

Stainless AISI 303/316 Shafts

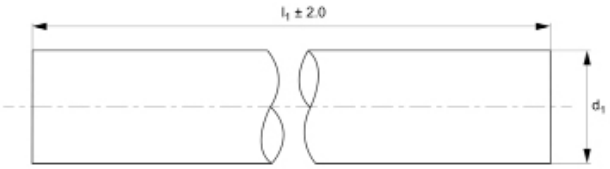



Part Number	d1	l1	Tolerance μ tol. h6	Material
20330248	40.0	1500.0	+0,-16	316 Stainless Steel
20330255	40.0	1550.0	+0,-16	316 Stainless Steel
20330262	40.0	1600.0	+0,-16	316 Stainless Steel
20330279	40.0	1650.0	+0,-16	316 Stainless Steel
20330286	40.0	1700.0	+0,-16	316 Stainless Steel
20330293	40.0	1750.0	+0,-16	316 Stainless Steel
20330309	40.0	1800.0	+0,-16	316 Stainless Steel
20330316	40.0	1850.0	+0,-16	316 Stainless Steel
20330323	40.0	1900.0	+0,-16	316 Stainless Steel
20330330	40.0	1950.0	+0,-16	316 Stainless Steel
20330347	40.0	2000.0	+0,-16	316 Stainless Steel
20330354	40.0	2050.0	+0,-16	316 Stainless Steel
20330361	40.0	2100.0	+0,-16	316 Stainless Steel
20330378	40.0	2150.0	+0,-16	316 Stainless Steel
20330385	40.0	2200.0	+0,-16	316 Stainless Steel
20330392	40.0	2250.0	+0,-16	316 Stainless Steel
20330408	40.0	2300.0	+0,-16	316 Stainless Steel
20330415	40.0	2350.0	+0,-16	316 Stainless Steel
20330422	40.0	2400.0	+0,-16	316 Stainless Steel
20330439	40.0	2450.0	+0,-16	316 Stainless Steel
20330446	40.0	2500.0	+0,-16	316 Stainless Steel
20330453	40.0	2550.0	+0,-16	316 Stainless Steel
20330460	40.0	2600.0	+0,-16	316 Stainless Steel
20330477	40.0	2650.0	+0,-16	316 Stainless Steel
20330484	40.0	2700.0	+0,-16	316 Stainless Steel
20330491	40.0	2750.0	+0,-16	316 Stainless Steel

Part Number	d1	l1	Tolerance μ tol. h6	Material
20330507	40.0	2800.0	+0,-16	316 Stainless Steel
20330514	40.0	2850.0	+0,-16	316 Stainless Steel
20330521	40.0	2900.0	+0,-16	316 Stainless Steel
20330538	40.0	2950.0	+0,-16	316 Stainless Steel
20330545	40.0	3000.0	+0,-16	316 Stainless Steel
20330552	40.0	3050.0	+0,-16	316 Stainless Steel
20330569	40.0	3100.0	+0,-16	316 Stainless Steel
20330576	40.0	3150.0	+0,-16	316 Stainless Steel
20330583	40.0	3200.0	+0,-16	316 Stainless Steel
20330590	40.0	3250.0	+0,-16	316 Stainless Steel
20330606	40.0	3300.0	+0,-16	316 Stainless Steel
20330613	40.0	3350.0	+0,-16	316 Stainless Steel
20330620	40.0	3400.0	+0,-16	316 Stainless Steel
20330637	40.0	3450.0	+0,-16	316 Stainless Steel
20330644	40.0	3500.0	+0,-16	316 Stainless Steel
20330651	40.0	3550.0	+0,-16	316 Stainless Steel
20330668	40.0	3600.0	+0,-16	316 Stainless Steel
20330675	40.0	3650.0	+0,-16	316 Stainless Steel
20330682	40.0	3700.0	+0,-16	316 Stainless Steel
20330699	40.0	3750.0	+0,-16	316 Stainless Steel
20330705	40.0	3800.0	+0,-16	316 Stainless Steel
20330712	40.0	3850.0	+0,-16	316 Stainless Steel
20330729	40.0	3900.0	+0,-16	316 Stainless Steel
20330736	40.0	3950.0	+0,-16	316 Stainless Steel
20330743	40.0	4000.0	+0,-16	316 Stainless Steel
20330750	40.0	4050.0	+0,-16	316 Stainless Steel

Stainless AISI 303/316 Shafts

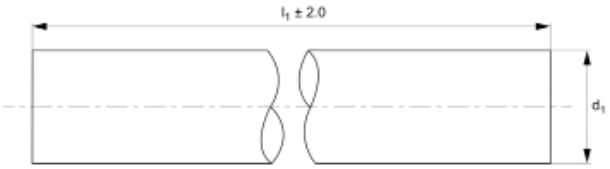



Part Number	d1	l1	Tolerance μ tol. h6	Material
20330767	40.0	4100.0	+0,-16	316 Stainless Steel
20330774	40.0	4150.0	+0,-16	316 Stainless Steel
20330781	40.0	4200.0	+0,-16	316 Stainless Steel
20330798	40.0	4250.0	+0,-16	316 Stainless Steel
20330804	40.0	4300.0	+0,-16	316 Stainless Steel
20330811	40.0	4350.0	+0,-16	316 Stainless Steel
20330828	40.0	4400.0	+0,-16	316 Stainless Steel
20330835	40.0	4450.0	+0,-16	316 Stainless Steel
20330842	40.0	4500.0	+0,-16	316 Stainless Steel
20330859	40.0	4550.0	+0,-16	316 Stainless Steel
20330866	40.0	4600.0	+0,-16	316 Stainless Steel
20330873	40.0	4650.0	+0,-16	316 Stainless Steel
20330880	40.0	4700.0	+0,-16	316 Stainless Steel
20330897	40.0	4750.0	+0,-16	316 Stainless Steel
20330903	40.0	4800.0	+0,-16	316 Stainless Steel
20330910	40.0	4850.0	+0,-16	316 Stainless Steel
20330927	40.0	4900.0	+0,-16	316 Stainless Steel
20330934	40.0	4950.0	+0,-16	316 Stainless Steel
20330941	40.0	5000.0	+0,-16	316 Stainless Steel
20330958	40.0	5050.0	+0,-16	316 Stainless Steel
20330965	40.0	5100.0	+0,-16	316 Stainless Steel
20330972	40.0	5150.0	+0,-16	316 Stainless Steel
20330989	40.0	5200.0	+0,-16	316 Stainless Steel
20330996	40.0	5250.0	+0,-16	316 Stainless Steel
20331009	40.0	5300.0	+0,-16	316 Stainless Steel
20331016	40.0	5350.0	+0,-16	316 Stainless Steel

Part Number	d1	l1	Tolerance μ tol. h6	Material
20331023	40.0	5400.0	+0,-16	316 Stainless Steel
20331030	40.0	5450.0	+0,-16	316 Stainless Steel
20331047	40.0	5500.0	+0,-16	316 Stainless Steel
20331054	40.0	5550.0	+0,-16	316 Stainless Steel
20331061	40.0	5600.0	+0,-16	316 Stainless Steel
20331078	40.0	5650.0	+0,-16	316 Stainless Steel
20331085	40.0	5700.0	+0,-16	316 Stainless Steel
20331092	40.0	5750.0	+0,-16	316 Stainless Steel
20331108	40.0	5800.0	+0,-16	316 Stainless Steel
20331115	40.0	5850.0	+0,-16	316 Stainless Steel
20331122	40.0	5900.0	+0,-16	316 Stainless Steel
20331139	40.0	5950.0	+0,-16	316 Stainless Steel
20331146	40.0	6000.0	+0,-16	316 Stainless Steel
20331153	50.0	100.0	+0,-16	316 Stainless Steel
20331160	50.0	150.0	+0,-16	316 Stainless Steel
20331177	50.0	200.0	+0,-16	316 Stainless Steel
20331184	50.0	250.0	+0,-16	316 Stainless Steel
20331191	50.0	300.0	+0,-16	316 Stainless Steel
20331207	50.0	350.0	+0,-16	316 Stainless Steel
20331214	50.0	400.0	+0,-16	316 Stainless Steel
20331221	50.0	450.0	+0,-16	316 Stainless Steel
20331238	50.0	500.0	+0,-16	316 Stainless Steel
20331245	50.0	550.0	+0,-16	316 Stainless Steel
20331252	50.0	600.0	+0,-16	316 Stainless Steel
20331269	50.0	650.0	+0,-16	316 Stainless Steel
20331276	50.0	700.0	+0,-16	316 Stainless Steel

Stainless AISI 303/316 Shafts

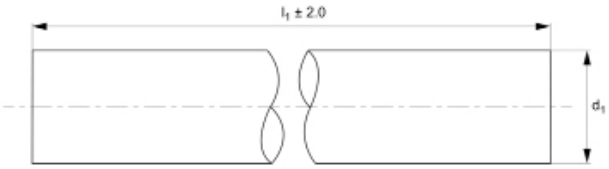



Part Number	d1	l1	Tolerance μ tol. h6	Material
20331283	50.0	750.0	+0,-16	316 Stainless Steel
20331290	50.0	800.0	+0,-16	316 Stainless Steel
20331306	50.0	850.0	+0,-16	316 Stainless Steel
20331313	50.0	900.0	+0,-16	316 Stainless Steel
20331320	50.0	1000.0	+0,-16	316 Stainless Steel
20331337	50.0	1050.0	+0,-16	316 Stainless Steel
20331344	50.0	1100.0	+0,-16	316 Stainless Steel
20331351	50.0	1150.0	+0,-16	316 Stainless Steel
20331368	50.0	1200.0	+0,-16	316 Stainless Steel
20331375	50.0	1250.0	+0,-16	316 Stainless Steel
20331382	50.0	1300.0	+0,-16	316 Stainless Steel
20331399	50.0	1350.0	+0,-16	316 Stainless Steel
20331405	50.0	1400.0	+0,-16	316 Stainless Steel
20331412	50.0	1450.0	+0,-16	316 Stainless Steel
20331429	50.0	1500.0	+0,-16	316 Stainless Steel
20331436	50.0	1550.0	+0,-16	316 Stainless Steel
20331443	50.0	1600.0	+0,-16	316 Stainless Steel
20331450	50.0	1650.0	+0,-16	316 Stainless Steel
20331467	50.0	1700.0	+0,-16	316 Stainless Steel
20331474	50.0	1750.0	+0,-16	316 Stainless Steel
20331481	50.0	1800.0	+0,-16	316 Stainless Steel
20331498	50.0	1850.0	+0,-16	316 Stainless Steel
20331504	50.0	1900.0	+0,-16	316 Stainless Steel
20331511	50.0	1950.0	+0,-16	316 Stainless Steel
20331528	50.0	2000.0	+0,-16	316 Stainless Steel
20331535	50.0	2050.0	+0,-16	316 Stainless Steel

Part Number	d1	l1	Tolerance μ tol. h6	Material
20331542	50.0	2100.0	+0,-16	316 Stainless Steel
20331559	50.0	2150.0	+0,-16	316 Stainless Steel
20331566	50.0	2200.0	+0,-16	316 Stainless Steel
20331573	50.0	2250.0	+0,-16	316 Stainless Steel
20331580	50.0	2300.0	+0,-16	316 Stainless Steel
20331597	50.0	2350.0	+0,-16	316 Stainless Steel
20331603	50.0	2400.0	+0,-16	316 Stainless Steel
20331610	50.0	2450.0	+0,-16	316 Stainless Steel
20331627	50.0	2500.0	+0,-16	316 Stainless Steel
20331634	50.0	2550.0	+0,-16	316 Stainless Steel
20331641	50.0	2600.0	+0,-16	316 Stainless Steel
20331658	50.0	2650.0	+0,-16	316 Stainless Steel
20331665	50.0	2700.0	+0,-16	316 Stainless Steel
20331672	50.0	2750.0	+0,-16	316 Stainless Steel
20331689	50.0	2800.0	+0,-16	316 Stainless Steel
20331696	50.0	2850.0	+0,-16	316 Stainless Steel
20331702	50.0	2900.0	+0,-16	316 Stainless Steel
20331719	50.0	2950.0	+0,-16	316 Stainless Steel
20331726	50.0	3000.0	+0,-16	316 Stainless Steel
20331733	50.0	3050.0	+0,-16	316 Stainless Steel
20331740	50.0	3100.0	+0,-16	316 Stainless Steel
20331757	50.0	3150.0	+0,-16	316 Stainless Steel
20331764	50.0	3200.0	+0,-16	316 Stainless Steel
20331771	50.0	3250.0	+0,-16	316 Stainless Steel
20331788	50.0	3300.0	+0,-16	316 Stainless Steel
20331795	50.0	3350.0	+0,-16	316 Stainless Steel

Stainless AISI 303/316 Shafts

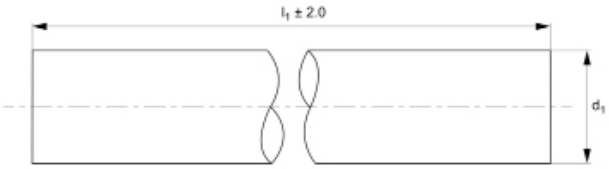



Part Number	d1	l1	Tolerance μ tol. h6	Material
20331801	50.0	3400.0	+0,-16	316 Stainless Steel
20331818	50.0	3450.0	+0,-16	316 Stainless Steel
20331825	50.0	3500.0	+0,-16	316 Stainless Steel
20331832	50.0	3550.0	+0,-16	316 Stainless Steel
20331849	50.0	3600.0	+0,-16	316 Stainless Steel
20331856	50.0	3650.0	+0,-16	316 Stainless Steel
20331863	50.0	3700.0	+0,-16	316 Stainless Steel
20331870	50.0	3750.0	+0,-16	316 Stainless Steel
20331887	50.0	3800.0	+0,-16	316 Stainless Steel
20331894	50.0	3850.0	+0,-16	316 Stainless Steel
20331900	50.0	3900.0	+0,-16	316 Stainless Steel
20331917	50.0	3950.0	+0,-16	316 Stainless Steel
20331924	50.0	4000.0	+0,-16	316 Stainless Steel
20331931	50.0	4050.0	+0,-16	316 Stainless Steel
20331948	50.0	4100.0	+0,-16	316 Stainless Steel
20331955	50.0	4150.0	+0,-16	316 Stainless Steel
20331962	50.0	4200.0	+0,-16	316 Stainless Steel
20331979	50.0	4250.0	+0,-16	316 Stainless Steel
20331986	50.0	4300.0	+0,-16	316 Stainless Steel
20331993	50.0	4350.0	+0,-16	316 Stainless Steel
20332006	50.0	4400.0	+0,-16	316 Stainless Steel
20332013	50.0	4450.0	+0,-16	316 Stainless Steel
20332020	50.0	4500.0	+0,-16	316 Stainless Steel
20332037	50.0	4550.0	+0,-16	316 Stainless Steel
20332044	50.0	4600.0	+0,-16	316 Stainless Steel
20332051	50.0	4650.0	+0,-16	316 Stainless Steel

Part Number	d1	l1	Tolerance μ tol. h6	Material
20332068	50.0	4700.0	+0,-16	316 Stainless Steel
20332075	50.0	4750.0	+0,-16	316 Stainless Steel
20332082	50.0	4800.0	+0,-16	316 Stainless Steel
20332099	50.0	4850.0	+0,-16	316 Stainless Steel
20332105	50.0	4900.0	+0,-16	316 Stainless Steel
20332112	50.0	4950.0	+0,-16	316 Stainless Steel
20332129	50.0	5000.0	+0,-16	316 Stainless Steel
20332136	50.0	5050.0	+0,-16	316 Stainless Steel
20332143	50.0	5100.0	+0,-16	316 Stainless Steel
20332150	50.0	5150.0	+0,-16	316 Stainless Steel
20332167	50.0	5200.0	+0,-16	316 Stainless Steel
20332174	50.0	5250.0	+0,-16	316 Stainless Steel
20332181	50.0	5300.0	+0,-16	316 Stainless Steel
20332198	50.0	5350.0	+0,-16	316 Stainless Steel
20332204	50.0	5400.0	+0,-16	316 Stainless Steel
20332211	50.0	5450.0	+0,-16	316 Stainless Steel
20332228	50.0	5500.0	+0,-16	316 Stainless Steel
20332235	50.0	5550.0	+0,-16	316 Stainless Steel
20332242	50.0	5600.0	+0,-16	316 Stainless Steel
20332259	50.0	5650.0	+0,-16	316 Stainless Steel
20332266	50.0	5700.0	+0,-16	316 Stainless Steel
20332273	50.0	5750.0	+0,-16	316 Stainless Steel
20332280	50.0	5800.0	+0,-16	316 Stainless Steel
20332297	50.0	5850.0	+0,-16	316 Stainless Steel
20332303	50.0	5900.0	+0,-16	316 Stainless Steel
20332310	50.0	5950.0	+0,-16	316 Stainless Steel

Stainless AISI 303/316 Shafts

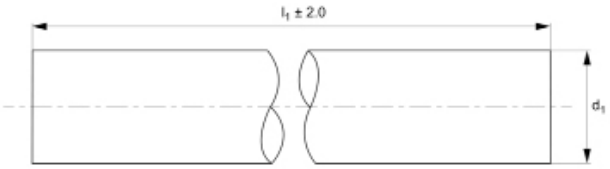



Part Number	d1	l1	Tolerance μ tol. h6	Material
20332327	50.0	6000.0	+0,-16	316 Stainless Steel
20332334	60.0	100.0	+0,-19	316 Stainless Steel
20332341	60.0	150.0	+0,-19	316 Stainless Steel
20332358	60.0	200.0	+0,-19	316 Stainless Steel
20332365	60.0	250.0	+0,-19	316 Stainless Steel
20332372	60.0	300.0	+0,-19	316 Stainless Steel
20332389	60.0	350.0	+0,-19	316 Stainless Steel
20332396	60.0	400.0	+0,-19	316 Stainless Steel
20332402	60.0	450.0	+0,-19	316 Stainless Steel
20332419	60.0	500.0	+0,-19	316 Stainless Steel
20332426	60.0	550.0	+0,-19	316 Stainless Steel
20332433	60.0	600.0	+0,-19	316 Stainless Steel
20332440	60.0	650.0	+0,-19	316 Stainless Steel
20332457	60.0	700.0	+0,-19	316 Stainless Steel
20332464	60.0	750.0	+0,-19	316 Stainless Steel
20332471	60.0	800.0	+0,-19	316 Stainless Steel
20332488	60.0	850.0	+0,-19	316 Stainless Steel
20332495	60.0	900.0	+0,-19	316 Stainless Steel
20332501	60.0	950.0	+0,-19	316 Stainless Steel
20332518	60.0	1000.0	+0,-19	316 Stainless Steel
20332525	60.0	1050.0	+0,-19	316 Stainless Steel
20332532	60.0	1100.0	+0,-19	316 Stainless Steel
20332549	60.0	1150.0	+0,-19	316 Stainless Steel
20332556	60.0	1200.0	+0,-19	316 Stainless Steel
20332563	60.0	1250.0	+0,-19	316 Stainless Steel
20332570	60.0	1300.0	+0,-19	316 Stainless Steel

Part Number	d1	l1	Tolerance μ tol. h6	Material
20332587	60.0	1350.0	+0,-19	316 Stainless Steel
20332594	60.0	1400.0	+0,-19	316 Stainless Steel
20332600	60.0	1450.0	+0,-19	316 Stainless Steel
20332617	60.0	1500.0	+0,-19	316 Stainless Steel
20332624	60.0	1550.0	+0,-19	316 Stainless Steel
20332631	60.0	1600.0	+0,-19	316 Stainless Steel
20332648	60.0	1650.0	+0,-19	316 Stainless Steel
20332655	60.0	1700.0	+0,-19	316 Stainless Steel
20332662	60.0	1750.0	+0,-19	316 Stainless Steel
20332679	60.0	1800.0	+0,-19	316 Stainless Steel
20332686	60.0	1850.0	+0,-19	316 Stainless Steel
20332693	60.0	1900.0	+0,-19	316 Stainless Steel
20332709	60.0	1950.0	+0,-19	316 Stainless Steel
20332716	60.0	2000.0	+0,-19	316 Stainless Steel
20332723	60.0	2050.0	+0,-19	316 Stainless Steel
20332730	60.0	2100.0	+0,-19	316 Stainless Steel
20332747	60.0	2150.0	+0,-19	316 Stainless Steel
20332754	60.0	2200.0	+0,-19	316 Stainless Steel
20332761	60.0	2250.0	+0,-19	316 Stainless Steel
20332778	60.0	2300.0	+0,-19	316 Stainless Steel
20332785	60.0	2350.0	+0,-19	316 Stainless Steel
20332792	60.0	2400.0	+0,-19	316 Stainless Steel
20332808	60.0	2450.0	+0,-19	316 Stainless Steel
20332815	60.0	2500.0	+0,-19	316 Stainless Steel
20332822	60.0	2550.0	+0,-19	316 Stainless Steel
20332839	60.0	2600.0	+0,-19	316 Stainless Steel

Stainless AISI 303/316 Shafts

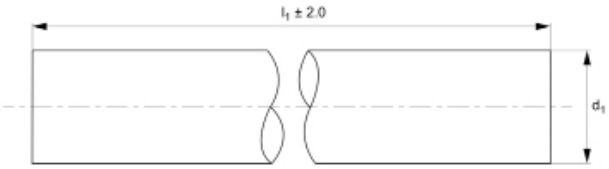



Part Number	d1	l1	Tolerance μ tol. h6	Material
20332846	60.0	2650.0	+0,-19	316 Stainless Steel
20332853	60.0	2700.0	+0,-19	316 Stainless Steel
20332860	60.0	2750.0	+0,-19	316 Stainless Steel
20332877	60.0	2800.0	+0,-19	316 Stainless Steel
20332884	60.0	2850.0	+0,-19	316 Stainless Steel
20332891	60.0	2900.0	+0,-19	316 Stainless Steel
20332907	60.0	2950.0	+0,-19	316 Stainless Steel
20332914	60.0	3000.0	+0,-19	316 Stainless Steel
20332921	60.0	3050.0	+0,-19	316 Stainless Steel
20332938	60.0	3100.0	+0,-19	316 Stainless Steel
20332945	60.0	3150.0	+0,-19	316 Stainless Steel
20332952	60.0	3200.0	+0,-19	316 Stainless Steel
20332969	60.0	3250.0	+0,-19	316 Stainless Steel
20332976	60.0	3300.0	+0,-19	316 Stainless Steel
20332983	60.0	3350.0	+0,-19	316 Stainless Steel
20332990	60.0	3400.0	+0,-19	316 Stainless Steel
20333003	60.0	3450.0	+0,-19	316 Stainless Steel
20333010	60.0	3500.0	+0,-19	316 Stainless Steel
20333027	60.0	3550.0	+0,-19	316 Stainless Steel
20333034	60.0	3600.0	+0,-19	316 Stainless Steel
20333041	60.0	3650.0	+0,-19	316 Stainless Steel
20333058	60.0	3700.0	+0,-19	316 Stainless Steel
20333065	60.0	3750.0	+0,-19	316 Stainless Steel
20333072	60.0	3800.0	+0,-19	316 Stainless Steel
20333089	60.0	3850.0	+0,-19	316 Stainless Steel
20333096	60.0	3900.0	+0,-19	316 Stainless Steel

Part Number	d1	l1	Tolerance μ tol. h6	Material
20333102	60.0	3950.0	+0,-19	316 Stainless Steel
20333119	60.0	4000.0	+0,-19	316 Stainless Steel
20333126	60.0	4050.0	+0,-19	316 Stainless Steel
20333133	60.0	4100.0	+0,-19	316 Stainless Steel
20333140	60.0	4150.0	+0,-19	316 Stainless Steel
20333157	60.0	4200.0	+0,-19	316 Stainless Steel
20333164	60.0	4250.0	+0,-19	316 Stainless Steel
20333171	60.0	4300.0	+0,-19	316 Stainless Steel
20333188	60.0	4350.0	+0,-19	316 Stainless Steel
20333195	60.0	4400.0	+0,-19	316 Stainless Steel
20333201	60.0	4450.0	+0,-19	316 Stainless Steel
20333218	60.0	4500.0	+0,-19	316 Stainless Steel
20333225	60.0	4550.0	+0,-19	316 Stainless Steel
20333232	60.0	4600.0	+0,-19	316 Stainless Steel
20333249	60.0	4650.0	+0,-19	316 Stainless Steel
20333256	60.0	4700.0	+0,-19	316 Stainless Steel
20333263	60.0	4750.0	+0,-19	316 Stainless Steel
20333270	60.0	4800.0	+0,-19	316 Stainless Steel
20333287	60.0	4850.0	+0,-19	316 Stainless Steel
20333294	60.0	4900.0	+0,-19	316 Stainless Steel
20333300	60.0	4950.0	+0,-19	316 Stainless Steel
20333317	60.0	5000.0	+0,-19	316 Stainless Steel
20333324	60.0	5050.0	+0,-19	316 Stainless Steel
20333331	60.0	5100.0	+0,-19	316 Stainless Steel
20333348	60.0	5150.0	+0,-19	316 Stainless Steel
20333355	60.0	5200.0	+0,-19	316 Stainless Steel

Stainless AISI 303/316 Shafts

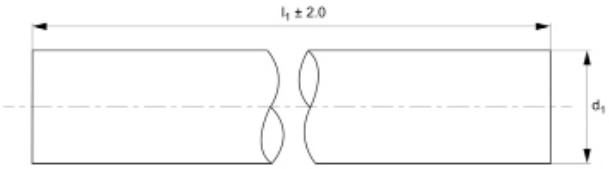



Part Number	d1	l1	Tolerance μ tol. h6	Material
20333362	60.0	5250.0	+0,-19	316 Stainless Steel
20333379	60.0	5300.0	+0,-19	316 Stainless Steel
20333386	60.0	5350.0	+0,-19	316 Stainless Steel
20333393	60.0	5400.0	+0,-19	316 Stainless Steel
20333409	60.0	5450.0	+0,-19	316 Stainless Steel
20333416	60.0	5500.0	+0,-19	316 Stainless Steel
20333423	60.0	5550.0	+0,-19	316 Stainless Steel
20333430	60.0	5600.0	+0,-19	316 Stainless Steel
20333447	60.0	5650.0	+0,-19	316 Stainless Steel
20333454	60.0	5700.0	+0,-19	316 Stainless Steel
20333461	60.0	5750.0	+0,-19	316 Stainless Steel
20333478	60.0	5800.0	+0,-19	316 Stainless Steel
20333485	60.0	5850.0	+0,-19	316 Stainless Steel
20333492	60.0	5900.0	+0,-19	316 Stainless Steel
20333508	60.0	5950.0	+0,-19	316 Stainless Steel
20333515	60.0	6000.0	+0,-19	316 Stainless Steel

Aluminium Shafts

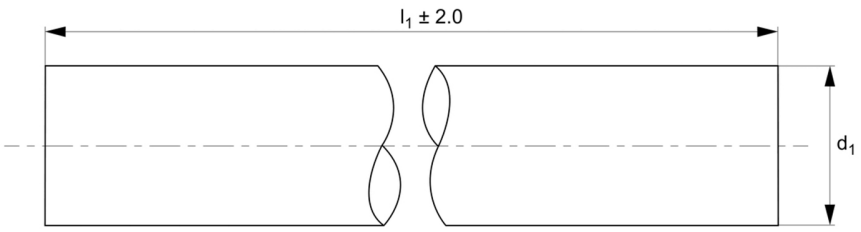



Features

- Have a great strength-to-weight ratio, corrosion resistance, and thermal conductivity.
- The corrosion resistance offers a longer lifespan for the shafts and avoids the need for regular maintenance or replacement.
- It can endure temperatures ranging from -130 C to +200 C.

Specifications

Material: Aluminium

These Aluminium Shafts are a versatile, non-magnetic, and lightweight alternative for various sectors that require a sturdy and durable component. It has a great strength-to-weight ratio, corrosion resistance, and thermal conductivity. The corrosion resistance offers a longer lifespan for the shafts and avoids the need for regular maintenance or replacement.

It can endure huge loads and function without deformation or failure under harsh circumstances. It is not meant for use with ball bush linear bearings but rather with self-lubricating ceramic bushings.

It can endure temperatures ranging from -130 C to +200 C. Given these characteristics, they are frequently used in applications such as oil and gas equipment, medical devices, the construction sector, and the automobile industry.

Aluminium Shafts

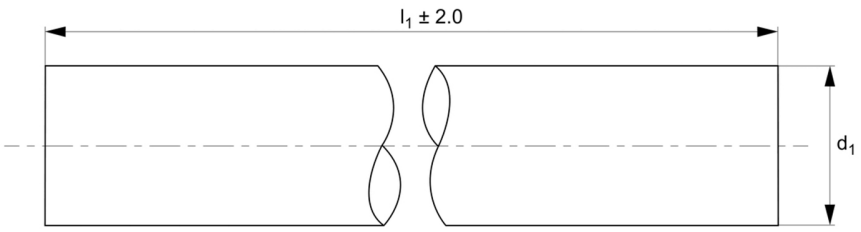



Part Number	d1 tol. h6	l1	Tolerance µ tol. h6
20333522	8.0	100.0	+0,-9
20333539	8.0	150.0	+0,-9
20333546	8.0	200.0	+0,-9
20333553	8.0	250.0	+0,-9
20333560	8.0	300.0	+0,-9
20333577	8.0	350.0	+0,-9
20333584	8.0	400.0	+0,-9
20333591	8.0	450.0	+0,-9
20333607	8.0	500.0	+0,-9
20333614	8.0	550.0	+0,-9
20333621	8.0	600.0	+0,-9
20333638	8.0	650.0	+0,-9
20333645	8.0	700.0	+0,-9
20333652	8.0	750.0	+0,-9
20333669	8.0	800.0	+0,-9
20333676	8.0	850.0	+0,-9
20333683	8.0	900.0	+0,-9
20333690	8.0	1000.0	+0,-9
20333706	8.0	1050.0	+0,-9
20333713	8.0	1100.0	+0,-9
20333720	8.0	1150.0	+0,-9

Aluminium Shafts

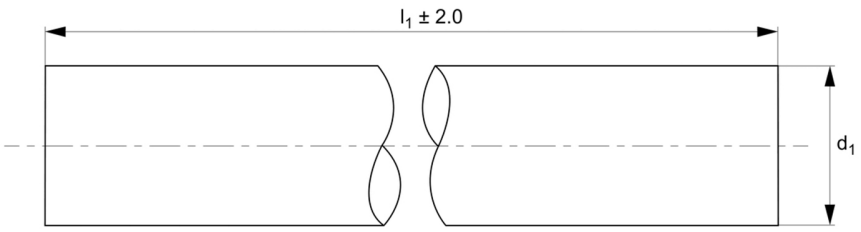



Part Number	d1 tol. h6	l1	Tolerance µ tol. h6
20333737	8.0	1200.0	+0,-9
20333744	8.0	1250.0	+0,-9
20333751	8.0	1300.0	+0,-9
20333768	8.0	1350.0	+0,-9
20333775	8.0	1400.0	+0,-9
20333782	8.0	1450.0	+0,-9
20333799	8.0	1500.0	+0,-9
20333805	8.0	1550.0	+0,-9
20333812	8.0	1600.0	+0,-9
20333829	8.0	1650.0	+0,-9
20333836	8.0	1700.0	+0,-9
20333843	8.0	1750.0	+0,-9
20333850	8.0	1800.0	+0,-9
20333867	8.0	1850.0	+0,-9
20333874	8.0	1900.0	+0,-9
20333881	8.0	1950.0	+0,-9
20333898	8.0	2000.0	+0,-9
20333904	10.0	100.0	+0,-9
20333911	10.0	150.0	+0,-9
20333928	10.0	200.0	+0,-9
20333935	10.0	250.0	+0,-9

Aluminium Shafts

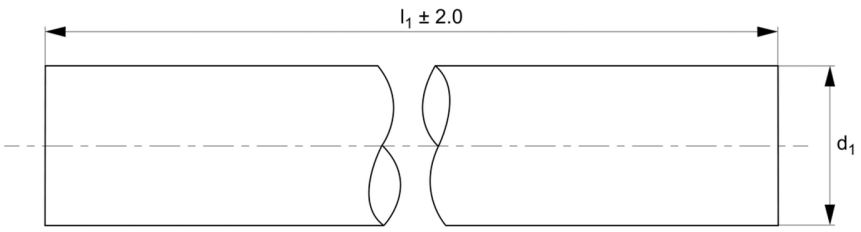



Part Number	d1 tol. h6	l1	Tolerance μ tol. h6
20333942	10.0	300.0	+0,-9
20333959	10.0	350.0	+0,-9
20333966	10.0	400.0	+0,-9
20333973	10.0	450.0	+0,-9
20333980	10.0	500.0	+0,-9
20333997	10.0	550.0	+0,-9
20334000	10.0	600.0	+0,-9
20334017	10.0	650.0	+0,-9
20334024	10.0	700.0	+0,-9
20334031	10.0	750.0	+0,-9
20334048	10.0	800.0	+0,-9
20334055	10.0	850.0	+0,-9
20334062	10.0	900.0	+0,-9
20334079	10.0	1000.0	+0,-9
20334086	10.0	1050.0	+0,-9
20334093	10.0	1100.0	+0,-9
20334109	10.0	1150.0	+0,-9
20334116	10.0	1200.0	+0,-9
20334123	10.0	1250.0	+0,-9
20334130	10.0	1300.0	+0,-9
20334147	10.0	1350.0	+0,-9

Aluminium Shafts

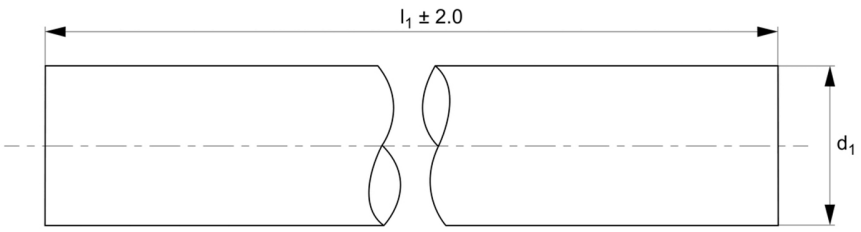



Part Number	d1 tol. h6	l1	Tolerance μ tol. h6
20334154	10.0	1400.0	+0,-9
20334161	10.0	1450.0	+0,-9
20334178	10.0	1500.0	+0,-9
20334185	10.0	1550.0	+0,-9
20334192	10.0	1600.0	+0,-9
20334208	10.0	1650.0	+0,-9
20334215	10.0	1700.0	+0,-9
20334222	10.0	1750.0	+0,-9
20334239	10.0	1800.0	+0,-9
20334246	10.0	1850.0	+0,-9
20334253	10.0	1900.0	+0,-9
20334260	10.0	1950.0	+0,-9
20334277	10.0	2000.0	+0,-9
20334284	12.0	100.0	+0,-9
20334291	12.0	150.0	+0,-9
20334307	12.0	200.0	+0,-9
20334314	12.0	250.0	+0,-9
20334321	12.0	300.0	+0,-9
20334338	12.0	350.0	+0,-9
20334345	12.0	400.0	+0,-9
20334352	12.0	450.0	+0,-9

Aluminium Shafts

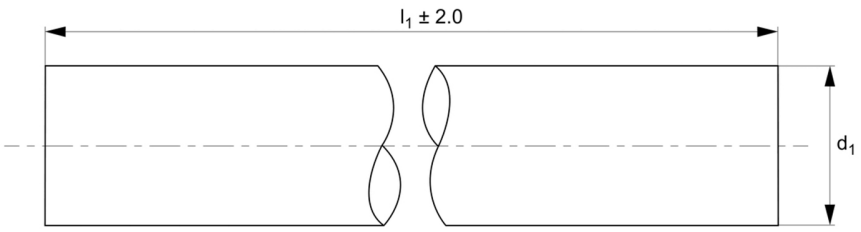



Part Number	d1 tol. h6	l1	Tolerance μ tol. h6
20334369	12.0	500.0	+0,-9
20334376	12.0	550.0	+0,-9
20334383	12.0	600.0	+0,-9
20334390	12.0	650.0	+0,-9
20334406	12.0	700.0	+0,-9
20334413	12.0	750.0	+0,-9
20334420	12.0	800.0	+0,-9
20334437	12.0	850.0	+0,-9
20334444	12.0	900.0	+0,-9
20334451	12.0	1000.0	+0,-9
20334468	12.0	1050.0	+0,-9
20334475	12.0	1100.0	+0,-9
20334482	12.0	1150.0	+0,-9
20334499	12.0	1200.0	+0,-9
20334505	12.0	1250.0	+0,-9
20334512	12.0	1300.0	+0,-9
20334529	12.0	1350.0	+0,-9
20334536	12.0	1400.0	+0,-9
20334543	12.0	1450.0	+0,-9
20334550	12.0	1500.0	+0,-9
20334567	12.0	1550.0	+0,-9

Aluminium Shafts

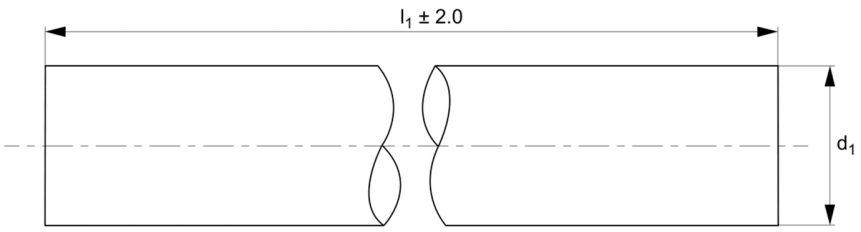



Part Number	d1 tol. h6	l1	Tolerance μ tol. h6
20334574	12.0	1600.0	+0,-9
20334581	12.0	1650.0	+0,-9
20334598	12.0	1700.0	+0,-9
20334604	12.0	1750.0	+0,-9
20334611	12.0	1800.0	+0,-9
20334628	12.0	1850.0	+0,-9
20334635	12.0	1900.0	+0,-9
20334642	12.0	1950.0	+0,-9
20334659	12.0	2000.0	+0,-9
20334666	16.0	100.0	+0,-9
20334673	16.0	150.0	+0,-9
20334680	16.0	200.0	+0,-9
20334697	16.0	250.0	+0,-9
20334703	16.0	300.0	+0,-9
20334710	16.0	350.0	+0,-9
20334727	16.0	400.0	+0,-9
20334734	16.0	450.0	+0,-9
20334741	16.0	500.0	+0,-9
20334758	16.0	550.0	+0,-9
20334765	16.0	600.0	+0,-9
20334772	16.0	650.0	+0,-9

Aluminium Shafts

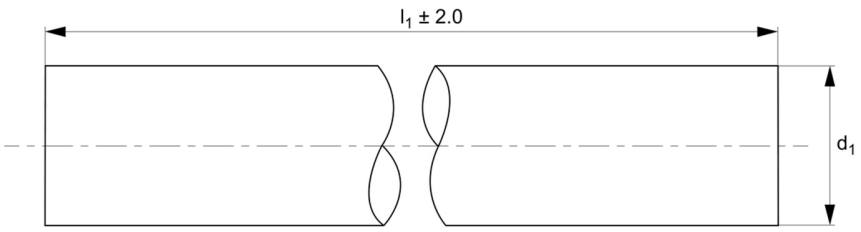



Part Number	d1 tol. h6	l1	Tolerance μ tol. h6
20334789	16.0	700.0	+0,-9
20334796	16.0	750.0	+0,-9
20334802	16.0	800.0	+0,-9
20334819	16.0	850.0	+0,-9
20334826	16.0	900.0	+0,-9
20334833	16.0	1000.0	+0,-9
20334840	16.0	1050.0	+0,-9
20334857	16.0	1100.0	+0,-9
20334864	16.0	1150.0	+0,-9
20334871	16.0	1200.0	+0,-9
20334888	16.0	1250.0	+0,-9
20334895	16.0	1300.0	+0,-9
20334901	16.0	1350.0	+0,-9
20334918	16.0	1400.0	+0,-9
20334925	16.0	1450.0	+0,-9
20334932	16.0	1500.0	+0,-9
20334949	16.0	1550.0	+0,-9
20334956	16.0	1600.0	+0,-9
20334963	16.0	1650.0	+0,-9
20334970	16.0	1700.0	+0,-9

Aluminium Shafts

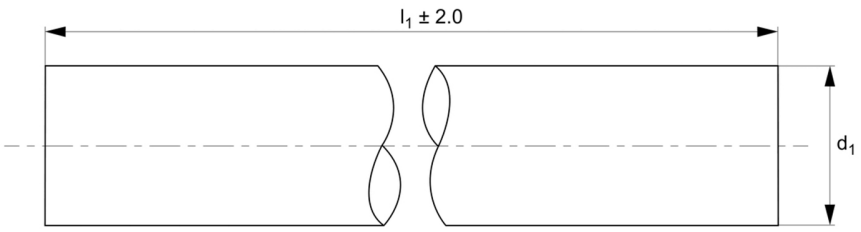



Part Number	d1 tol. h6	l1	Tolerance μ tol. h6
20334987	16.0	1750.0	+0,-9
20334994	16.0	1800.0	+0,-9
20335007	16.0	1850.0	+0,-9
20335014	16.0	1900.0	+0,-9
20335021	16.0	1950.0	+0,-9
20335038	16.0	2000.0	+0,-9
20335045	20.0	100.0	+0,-9
20335052	20.0	150.0	+0,-9
20335069	20.0	200.0	+0,-9
20335076	20.0	250.0	+0,-9
20335083	20.0	300.0	+0,-9
20335090	20.0	350.0	+0,-9
20335106	20.0	400.0	+0,-9
20335113	20.0	450.0	+0,-9
20335120	20.0	500.0	+0,-9
20335137	20.0	550.0	+0,-9
20335144	20.0	600.0	+0,-9
20335151	20.0	650.0	+0,-9
20335168	20.0	700.0	+0,-9
20335175	20.0	750.0	+0,-9
20335182	20.0	800.0	+0,-9

Aluminium Shafts

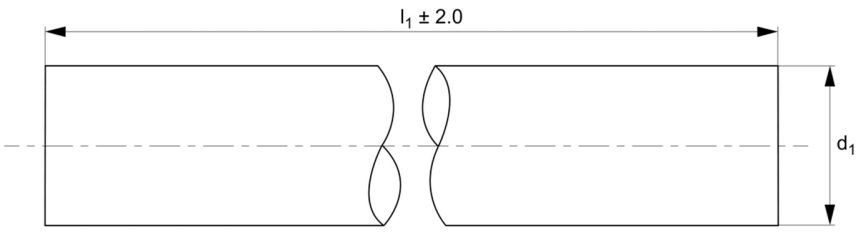



Part Number	d1 tol. h6	l1	Tolerance µ tol. h6
20335199	20.0	850.0	+0,-9
20335205	20.0	900.0	+0,-9
20335212	20.0	1000.0	+0,-9
20335229	20.0	1050.0	+0,-9
20335236	20.0	1100.0	+0,-9
20335243	20.0	1150.0	+0,-9
20335250	20.0	1200.0	+0,-9
20335267	20.0	1250.0	+0,-9
20335274	20.0	1300.0	+0,-9
20335281	20.0	1350.0	+0,-9
20335298	20.0	1400.0	+0,-9
20335304	20.0	1450.0	+0,-9
20335311	20.0	1500.0	+0,-9
20335328	20.0	1550.0	+0,-9
20335335	20.0	1600.0	+0,-9
20335342	20.0	1650.0	+0,-9
20335359	20.0	1700.0	+0,-9
20335366	20.0	1750.0	+0,-9
20335373	20.0	1800.0	+0,-9
20335380	20.0	1850.0	+0,-9
20335397	20.0	1900.0	+0,-9

Aluminium Shafts

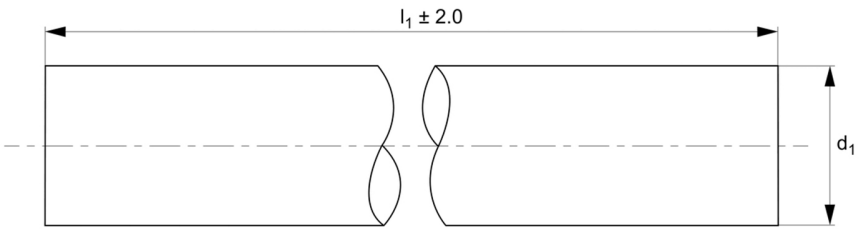



Part Number	d1 tol. h6	l1	Tolerance μ tol. h6
20335403	20.0	1950.0	+0,-9
20335410	20.0	2000.0	+0,-9
20335427	25.0	100.0	+0,-9
20335434	25.0	150.0	+0,-9
20335441	25.0	200.0	+0,-9
20335458	25.0	250.0	+0,-9
20335465	25.0	300.0	+0,-9
20335472	25.0	350.0	+0,-9
20335489	25.0	400.0	+0,-9
20335496	25.0	450.0	+0,-9
20335502	25.0	500.0	+0,-9
20335519	25.0	550.0	+0,-9
20335526	25.0	600.0	+0,-9
20335533	25.0	650.0	+0,-9
20335540	25.0	700.0	+0,-9
20335557	25.0	750.0	+0,-9
20335564	25.0	800.0	+0,-9
20335571	25.0	850.0	+0,-9
20335588	25.0	900.0	+0,-9
20335595	25.0	1000.0	+0,-9
20335601	25.0	1050.0	+0,-9

Aluminium Shafts

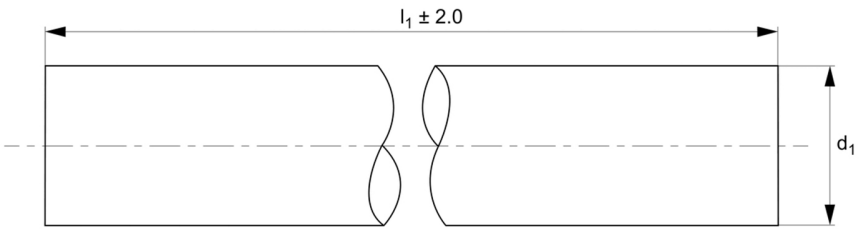



Part Number	d1 tol. h6	l1	Tolerance μ tol. h6
20335618	25.0	1100.0	+0,-9
20335625	25.0	1150.0	+0,-9
20335632	25.0	1200.0	+0,-9
20335649	25.0	1250.0	+0,-9
20335656	25.0	1300.0	+0,-9
20335663	25.0	1350.0	+0,-9
20335670	25.0	1400.0	+0,-9
20335687	25.0	1450.0	+0,-9
20335694	25.0	1500.0	+0,-9
20335700	25.0	1550.0	+0,-9
20335717	25.0	1600.0	+0,-9
20335724	25.0	1650.0	+0,-9
20335731	25.0	1700.0	+0,-9
20335748	25.0	1750.0	+0,-9
20335755	25.0	1800.0	+0,-9
20335762	25.0	1850.0	+0,-9
20335779	25.0	1900.0	+0,-9
20335786	25.0	1950.0	+0,-9
20335793	25.0	2000.0	+0,-9
20335809	30.0	100.0	+0,-9

Aluminium Shafts

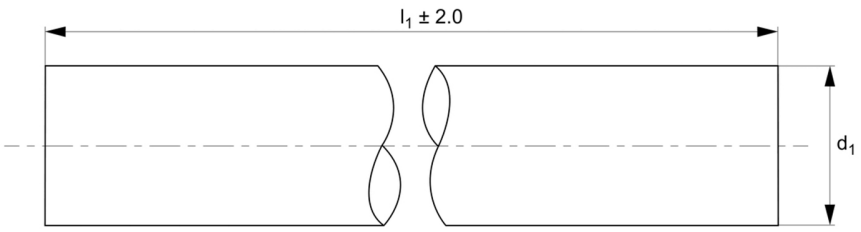



Part Number	d1 tol. h6	l1	Tolerance μ tol. h6
20335816	30.0	150.0	+0,-9
20335823	30.0	200.0	+0,-9
20335830	30.0	250.0	+0,-9
20335847	30.0	300.0	+0,-9
20335854	30.0	350.0	+0,-9
20335861	30.0	400.0	+0,-9
20335878	30.0	450.0	+0,-9
20335885	30.0	500.0	+0,-9
20335892	30.0	550.0	+0,-9
20335908	30.0	600.0	+0,-9
20335915	30.0	650.0	+0,-9
20335922	30.0	700.0	+0,-9
20335939	30.0	750.0	+0,-9
20335946	30.0	800.0	+0,-9
20335953	30.0	850.0	+0,-9
20335960	30.0	900.0	+0,-9
20335977	30.0	1000.0	+0,-9
20335984	30.0	1050.0	+0,-9
20335991	30.0	1100.0	+0,-9
20336004	30.0	1150.0	+0,-9
20336011	30.0	1200.0	+0,-9

Aluminium Shafts

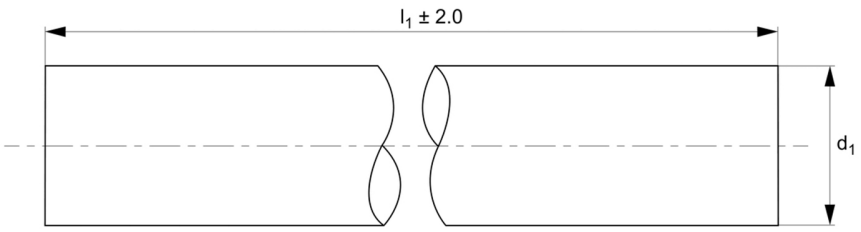



Part Number	d1 tol. h6	l1	Tolerance µ tol. h6
20336028	30.0	1250.0	+0,-9
20336035	30.0	1300.0	+0,-9
20336042	30.0	1350.0	+0,-9
20336059	30.0	1400.0	+0,-9
20336066	30.0	1450.0	+0,-9
20336073	30.0	1500.0	+0,-9
20336080	30.0	1550.0	+0,-9
20336097	30.0	1600.0	+0,-9
20336103	30.0	1650.0	+0,-9
20336110	30.0	1700.0	+0,-9
20336127	30.0	1750.0	+0,-9
20336134	30.0	1800.0	+0,-9
20336141	30.0	1850.0	+0,-9
20336158	30.0	1900.0	+0,-9
20336165	30.0	1950.0	+0,-9
20336172	30.0	2000.0	+0,-9
20336189	40.0	100.0	+0,-9
20336196	40.0	150.0	+0,-9
20336202	40.0	200.0	+0,-9
20336219	40.0	250.0	+0,-9
20336226	40.0	300.0	+0,-9
20336233	40.0	350.0	+0,-9

Aluminium Shafts

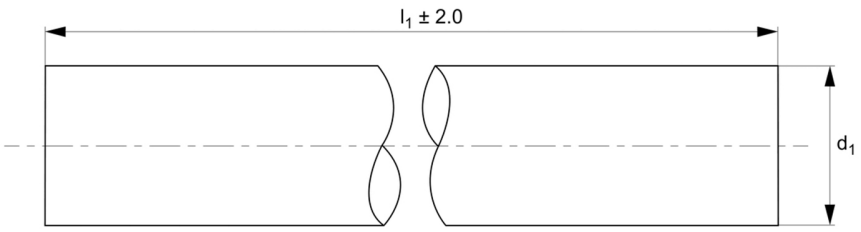



Part Number	d1 tol. h6	l1	Tolerance µ tol. h6
20336240	40.0	400.0	+0,-9
20336257	40.0	450.0	+0,-9
20336264	40.0	500.0	+0,-9
20336271	40.0	550.0	+0,-9
20336288	40.0	600.0	+0,-9
20336295	40.0	650.0	+0,-9
20336301	40.0	700.0	+0,-9
20336318	40.0	750.0	+0,-9
20336325	40.0	800.0	+0,-9
20336332	40.0	850.0	+0,-9
20336349	40.0	900.0	+0,-9
20336356	40.0	1000.0	+0,-9
20336363	40.0	1050.0	+0,-9
20336370	40.0	1100.0	+0,-9
20336387	40.0	1150.0	+0,-9
20336394	40.0	1200.0	+0,-9
20336400	40.0	1250.0	+0,-9
20336417	40.0	1300.0	+0,-9
20336424	40.0	1350.0	+0,-9
20336431	40.0	1400.0	+0,-9
20336448	40.0	1450.0	+0,-9

Aluminium Shafts

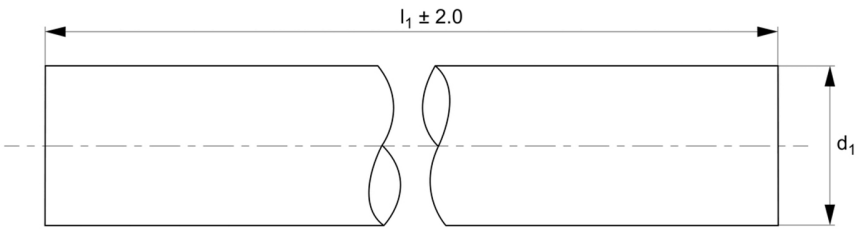



Part Number	d1 tol. h6	l1	Tolerance μ tol. h6
20336455	40.0	1500.0	+0,-9
20336462	40.0	1550.0	+0,-9
20336479	40.0	1600.0	+0,-9
20336486	40.0	1650.0	+0,-9
20336493	40.0	1700.0	+0,-9
20336509	40.0	1750.0	+0,-9
20336516	40.0	1800.0	+0,-9
20336523	40.0	1850.0	+0,-9
20336530	40.0	1900.0	+0,-9
20336547	40.0	1950.0	+0,-9
20336554	40.0	2000.0	+0,-9
20336561	50.0	100.0	+0,-9
20336578	50.0	150.0	+0,-9
20336585	50.0	200.0	+0,-9
20336592	50.0	250.0	+0,-9
20336608	50.0	300.0	+0,-9
20336615	50.0	350.0	+0,-9
20336622	50.0	400.0	+0,-9
20336639	50.0	450.0	+0,-9
20336646	50.0	500.0	+0,-9
20336653	50.0	550.0	+0,-9

Aluminium Shafts

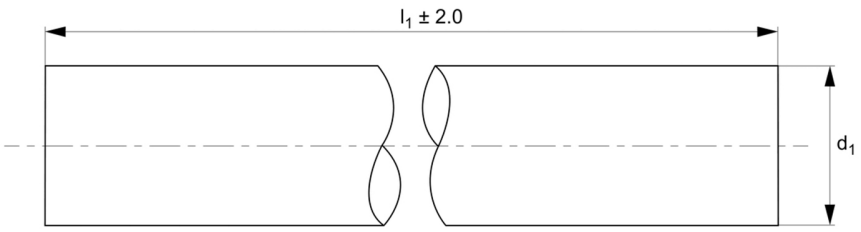



Part Number	d1 tol. h6	l1	Tolerance µ tol. h6
20336660	50.0	600.0	+0,-9
20336677	50.0	650.0	+0,-9
20336684	50.0	700.0	+0,-9
20336691	50.0	750.0	+0,-9
20336707	50.0	800.0	+0,-9
20336714	50.0	850.0	+0,-9
20336721	50.0	900.0	+0,-9
20336738	50.0	1000.0	+0,-9
20336745	50.0	1050.0	+0,-9
20336752	50.0	1100.0	+0,-9
20336769	50.0	1150.0	+0,-9
20336776	50.0	1200.0	+0,-9
20336783	50.0	1250.0	+0,-9
20336790	50.0	1300.0	+0,-9
20336806	50.0	1350.0	+0,-9
20336813	50.0	1400.0	+0,-9
20336820	50.0	1450.0	+0,-9
20336837	50.0	1500.0	+0,-9
20336844	50.0	1550.0	+0,-9
20336851	50.0	1600.0	+0,-9
20336868	50.0	1650.0	+0,-9

Aluminium Shafts

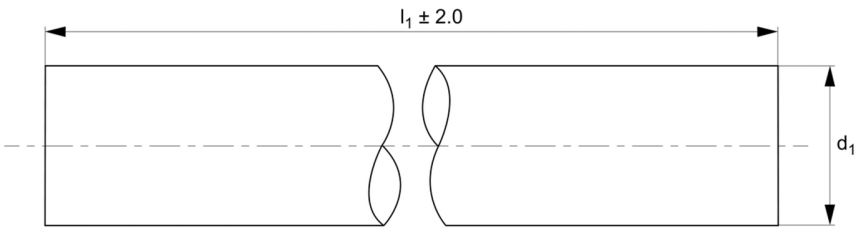



Part Number	d1 tol. h6	l1	Tolerance μ tol. h6
20336875	50.0	1700.0	+0,-9
20336882	50.0	1750.0	+0,-9
20336899	50.0	1800.0	+0,-9
20336905	50.0	1850.0	+0,-9
20336912	50.0	1900.0	+0,-9
20336929	50.0	1950.0	+0,-9
20336936	50.0	2000.0	+0,-9

Closed Linear Ball Bushings

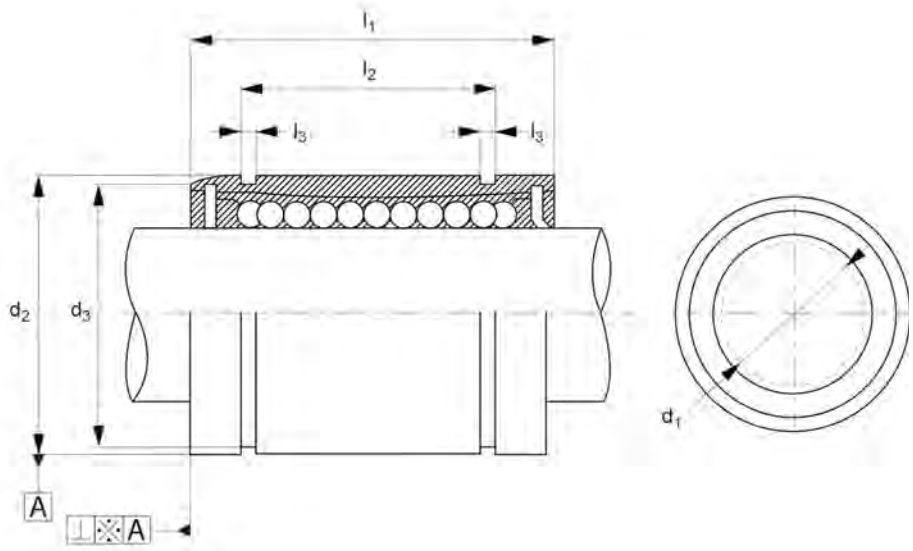



Features

- Used in linear motion systems and are designed to provide a smooth and precise movement along a linear axis.
- It can withstand temperatures from -20C to +80C.
- Ideal for use in applications such as automotive equipment, punching presses, and printing machines.

Specifications

Material: Stainless Steel, Steel

These Linear Ball Bushings are used in linear motion systems and are designed to provide a smooth and precise movement along a linear axis, allowing for accurate positioning and motion control. Composed of a housing with a row of 4-6 round ball circuits housed in a cage.

There are three types in this product group:

- Closed Linear Ball Bushings: These are utilised on hardened shafts. It is extremely resistant to wear, corrosion, and impact. This sturdy design ensures the bushings can endure large loads, high speeds, and extreme operating conditions without sacrificing performance or longevity.
- Stainless Ball Bushings: These bushings are utilised with corrosion-resistant toughened shafts. They are available in adjustable, double compliment, and extended version configurations. These bushings are extremely corrosion resistant, durable, and strong.
- Long Linear Bushings: These are utilised on hardened shafts. Designed for applications requiring linear motion over long strokes, assuring maximum performance and dependability.

Their design allows for smooth and precise linear motion, provides low-friction movement and minimises wear and tear. It can withstand temperatures from -20C to +80C. Ideal for use in applications such as automotive equipment, punching presses, and printing machines.

Closed Linear Ball Bushings

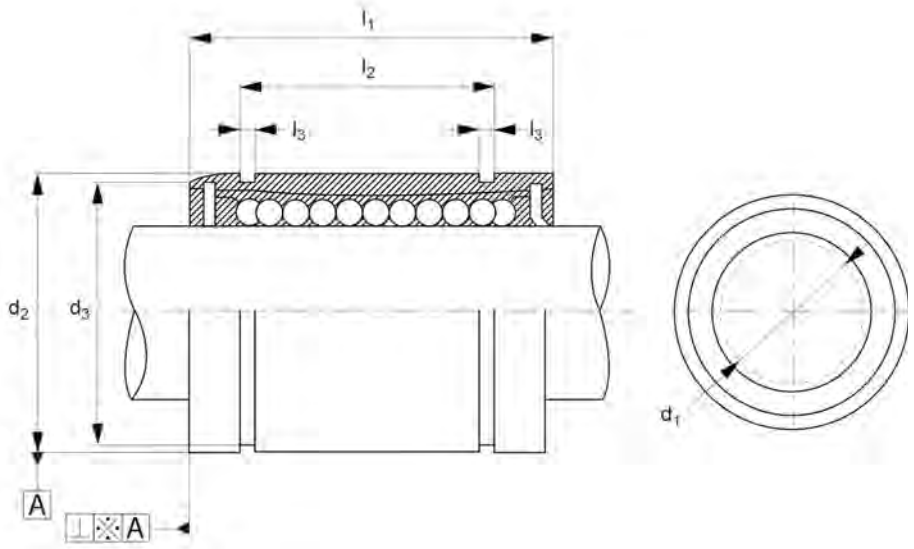



Part Number	Type	d1 tol. h6	d2 tol. h6	l1	l2	Material
20155858	Closed	5.0	12.0	22.0	14.5	Steel
20157258	Closed	6.0	12.0	19.0	13.5	Steel
20155988	Closed	8.0	16.0	25.0	16.5	Steel
20157265	Closed	10.0	19.0	29.0	22.0	Steel
20155391	Closed	12.0	22.0	32.0	22.9	Steel
20155490	Closed	16.0	26.0	36.0	24.9	Steel
20155599	Closed	20.0	2.0	45.0	31.5	Steel
20155681	Closed	25.0	25.0	40.0	44.1	Steel
20155766	Closed	30.0	47.0	68.0	52.1	Steel
20155803	Closed	40.0	62.0	80.0	60.6	Steel
20155865	Closed	50.0	75.0	100.0	77.6	Steel
20155926	Closed	60.0	90.0	125.0	101.7	Steel
20156046	Double Length	8.0	16.0	45.0	33.0	Steel
20155452	Double Length	12.0	22.0	57.0	45.8	Steel
20158309	Double Length	12.0	22.0	61.0	45.8	Steel
20155551	Double Length	16.0	26.0	70.0	49.8	Steel
20155643	Double Length	20.0	32.0	80.0	61.0	Steel
20155742	Double Length	25.0	40.0	112.0	82.0	Steel
20155780	Double Length	30.0	47.0	123.0	104.2	Steel
20155827	Double Length	40.0	62.0	154.0	121.2	Steel
20155889	Double Length	50.0	75.0	192.0	155.2	Steel

Closed Linear Ball Bushings

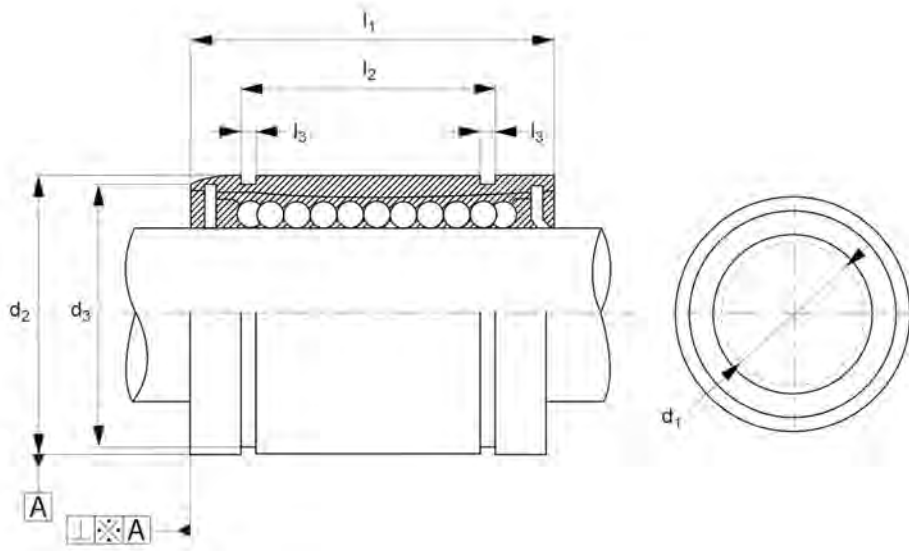



Part Number	Type	d1 tol. h6	d2 tol. h6	l1	l2	Material
20155940	Double Length	60.0	90.0	211.0	170.0	Steel
20155841	Closed	5.0	12.0	22.0	14.5	Stainless Steel
20157289	Closed	6.0	12.0	19.0	13.5	Stainless Steel
20157333	Closed	6.0	12.0	19.0	13.5	Stainless Steel
20155964	Closed	8.0	16.0	25.0	16.5	Stainless Steel
20155971	Closed	8.0	16.0	25.0	16.5	Stainless Steel
20157296	Closed	10.0	19.0	29.0	22.0	Stainless Steel
20157340	Closed	10.0	19.0	29.0	22.0	Stainless Steel
20155377	Closed	12.0	22.0	32.0	22.9	Stainless Steel
20155384	Closed	12.0	22.0	32.0	22.9	Stainless Steel
20155476	Closed	16.0	26.0	36.0	24.9	Stainless Steel
20155483	Closed	16.0	26.0	36.0	24.9	Stainless Steel
20155575	Closed	20.0	32.0	45.0	31.5	Stainless Steel
20155582	Closed	20.0	32.0	45.0	31.5	Stainless Steel
20155667	Closed	25.0	40.0	58.0	44.1	Stainless Steel
20155674	Closed	25.0	40.0	58.0	44.1	Stainless Steel
20158194	Closed	30.0	47.0	68.0	52.1	Stainless Steel
20158231	Closed	30.0	47.0	68.0	52.1	Stainless Steel
20158200	Closed	40.0	62.0	80.0	60.6	Stainless Steel
20158248	Closed	40.0	62.0	80.0	60.6	Stainless Steel
20158217	Closed	50.0	75.0	100.0	77.6	Stainless Steel

Closed Linear Ball Bushings

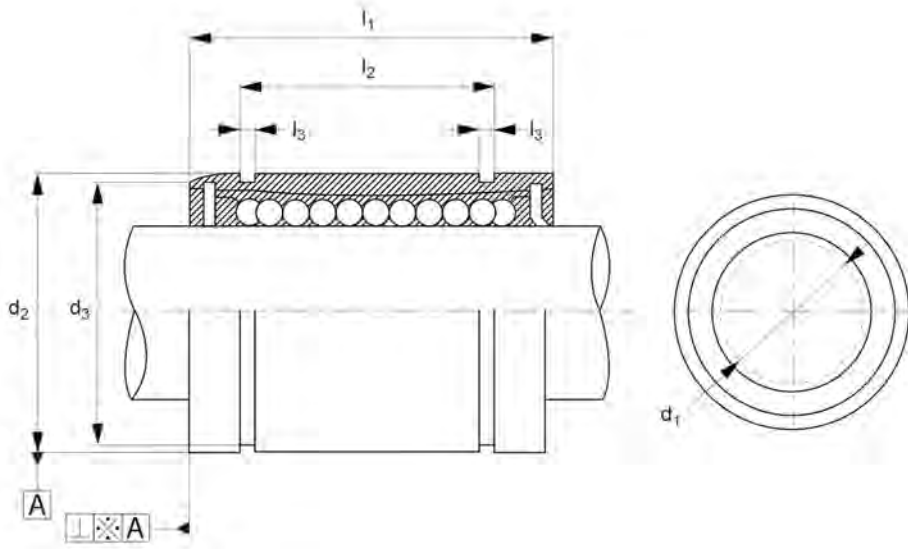



Part Number	Type	d1 tol. h6	d2 tol. h6	l1	l2	Material
20158255	Closed	50.0	75.0	100.0	77.6	Stainless Steel
20158224	Closed	60.0	90.0	125.0	101.7	Stainless Steel
20158262	Closed	60.0	90.0	125.0	101.7	Stainless Steel
20156022	Long Version	8.0	16.0	45.0	33.0	Stainless Steel
20156039	Long Version	8.0	16.0	45.0	33.0	Stainless Steel
20155438	Long Version	12.0	22.0	57.0	45.8	Stainless Steel
20155445	Long Version	12.0	22.0	57.0	45.8	Stainless Steel
20155537	Long Version	16.0	26.0	70.0	49.8	Stainless Steel
20155544	Long Version	16.0	26.0	70.0	49.8	Stainless Steel
20155629	Long Version	20.0	32.0	80.0	61.0	Stainless Steel
20155636	Long Version	20.0	32.0	80.0	61.0	Stainless Steel
20155728	Long Version	25.0	40.0	112.0	82.0	Stainless Steel
20155735	Long Version	25.0	40.0	112.0	82.0	Stainless Steel

Compact Linear Ball Bushings

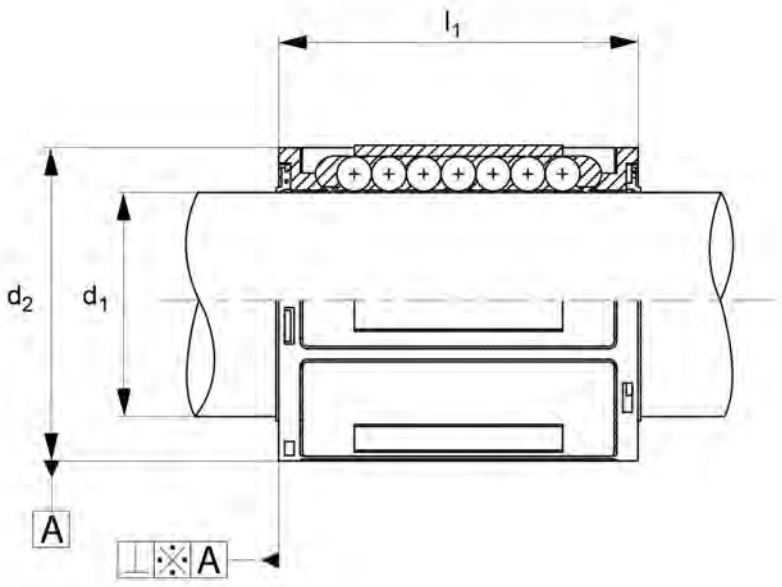

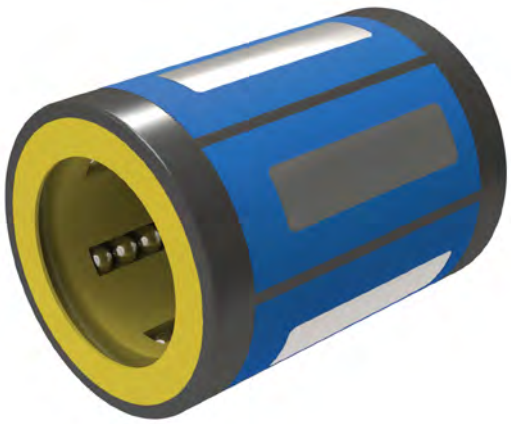

Features

- The compact design allows for efficient use of space in applications where space constraints are a concern.
- It can withstand temperatures from -20C to +80C.
- Ideal for automation systems, CNC machines, and manufacturing processes.

Specifications

Material: Iron

These Compact Linear Ball Bushings are designed for smooth and accurate linear motion in applications with limited space. Composed of a housing with a row of 4-6 round ball circuits housed in a cage. The compact design allows for efficient use of space in applications where space constraints are a concern. It also allows you to maximize the available space and achieve optimal performance in compact environments.

Easy to install through press fit, low friction for reduced wear and extended lifespan and high load-carrying capacity. Its seal is oil-resistant, and the housing is corrosion resistant.

It can withstand temperatures from -20C to +80C and is ideal for automation systems, CNC machines, and manufacturing processes.

Compact Linear Ball Bushings

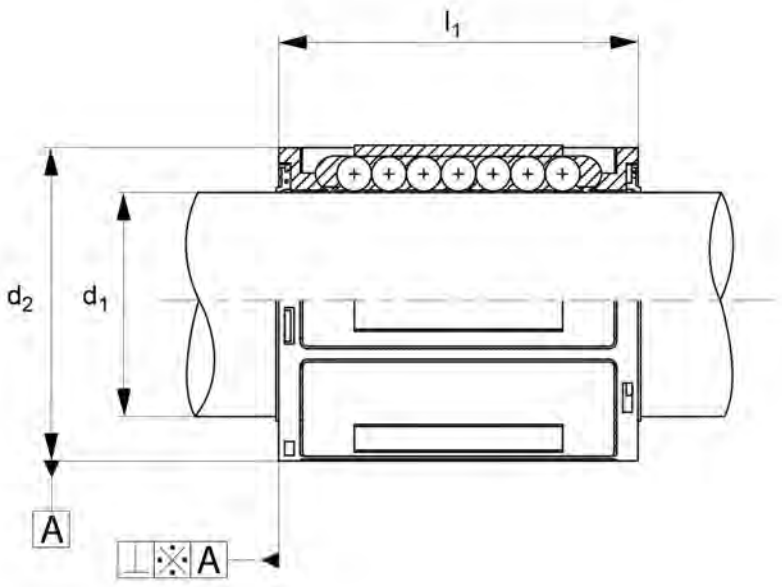

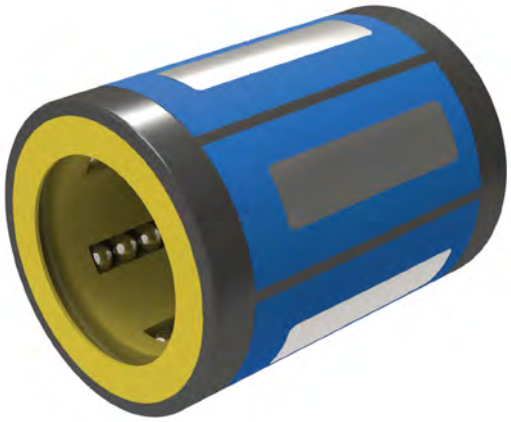

Part Number	d1 tol. h6	d2 tol. h6	l1	No. of ball circuits	Dyn. load C max. N	Static load C0 max. N
20158286	8.0	15.0	24.0	4.0	350.0	260.0
20158293	10.0	17.0	26.0	4.0	416.0	320.0
20157791	12.0	19.0	28.0	4.0	480.0	385.0
20157807	14.0	21.0	28.0	5.0	640.0	440.0
20157814	16.0	24.0	30.0	5.0	925.0	625.0
20157821	20.0	28.0	30.0	6.0	1165.0	790.0
20157838	25.0	35.0	40.0	6.0	2100.0	1370.0
20157845	30.0	40.0	50.0	6.0	2870.0	2100.0
20158187	40.0	52.0	60.0	7.0	5200.0	4100.0
20155360	50.0	62.0	70.0	8.0	6620.0	5600.0

Adjustable Linear Ball Bushings

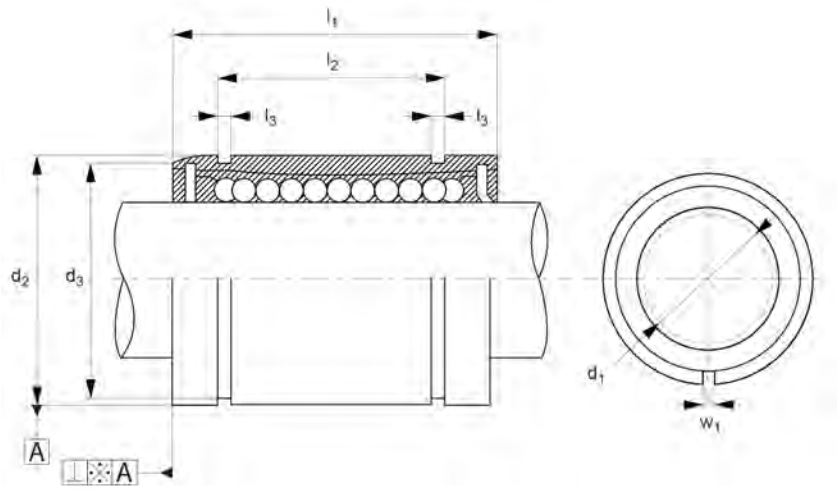



Features

- Used in linear motion systems and are designed to provide precise positioning along a linear axis.
- It can withstand temperatures from -20C to +80C.
- Ideal for applications that require frequent changes or fine adjustments, such as printing machines, recording equiptment, and manufacturing processes.

Specifications

Material: Stainless Steel, Steel

Adjustable Linear Ball Bushings are used in linear motion systems and are designed to provide precise positioning along a linear axis. Composed of a housing with a row of 4-6 round ball circuits housed in a cage. It has a thin slot down the length of the body which closes the clearance between the inner and outer races between the balls and the shaft when installed in a tight fit housing to illiminate play.

When installed on a linear shaft, the ball bearings circulate between the inner and outer races, providing smooth, linear motion.

It can withstand temperatures from -20C to +80C. Ideal for applications that require frequent changes or fine adjustments, such as printing machines, recording equiptment, and manufacturing processes.

Adjustable Linear Ball Bushings

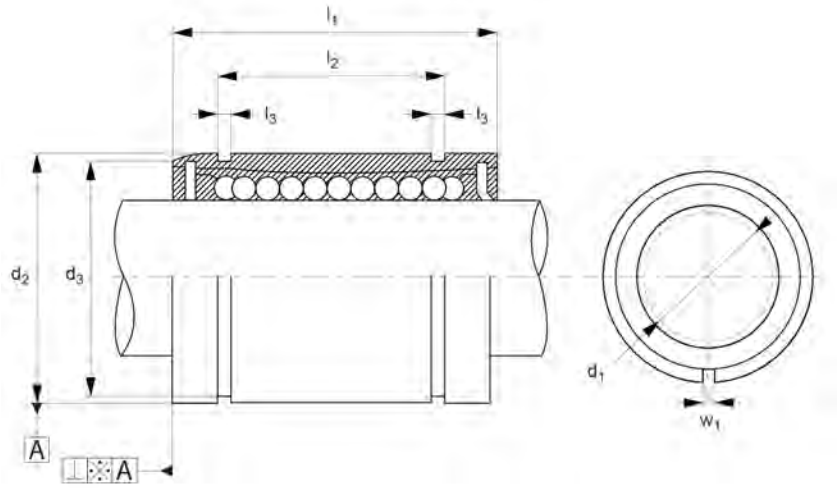



Part Number	d1 tol. h6	d2 tol. h6	l1	d3	l2	l3	w1
20155919	5.0	12.0	2.0	11.5	14.5	1.10	1.0
20157241	6.0	12.0	19.0	11.5	13.5	1.10	1.0
20156015	8.0	16.0	25.0	15.2	16.5	1.10	1.0
20157272	10.0	19.0	29.0	18.0	22.0	1.30	1.0
20155421	12.0	22.0	32.0	21.0	22.9	1.30	1.5
20155520	16.0	26.0	36.0	24.9	24.9	1.30	1.5
20155612	20.0	32.0	45.0	30.3	31.5	1.60	2.0
20155711	25.0	40.0	58.0	37.5	44.1	1.85	2.0
20155773	30.0	47.0	68.0	44.5	52.1	1.85	2.0
20155810	40.0	62.0	80.0	59.0	60.0	2.15	3.0
20155872	50.0	75.0	100.0	72.0	77.6	2.65	3.0
20155933	60.0	90.0	125.0	86.0	101.7	3.15	3.0
20155407	12.0	22.0	32.0	21.0	22.9	1.30	1.5
20155414	12.0	22.0	32.0	21.0	22.9	1.30	1.5
20155506	16.0	26.0	36.0	24.9	24.9	1.30	1.5
20155513	16.0	26.0	36.0	24.9	24.9	1.30	1.5
20155605	20.0	32.0	45.0	30.3	31.5	1.60	2.0
20155698	25.0	40.0	58.0	37.5	44.1	1.85	2.0
20155704	25.0	40.0	58.0	37.5	44.1	1.85	2.0
20155902	5.0	12.0	22.0	11.5	14.5	1.10	1.0

Adjustable Linear Ball Bushings

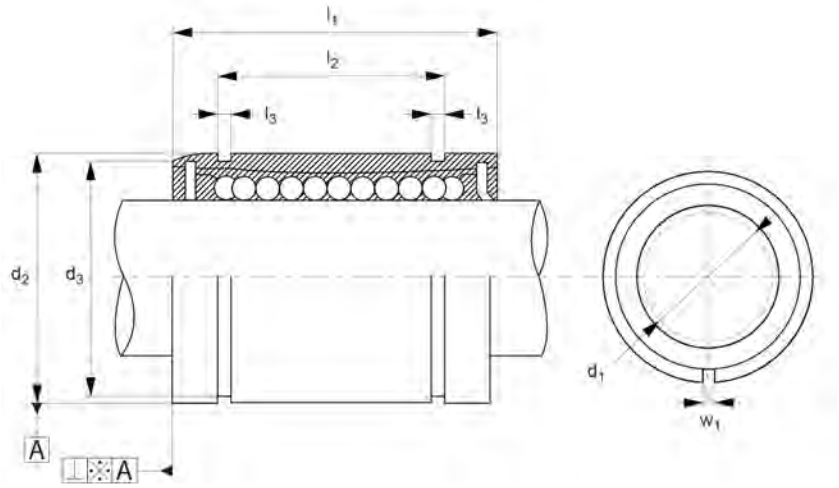



Part Number	d1 tol. h6	d2 tol. h6	l1	d3	l2	l3	w1
20155995	8.0	16.0	25.0	15.2	16.5	1.10	1.0
20156008	8.0	16.0	25.0	15.2	16.5	1.10	1.0
20157302	6.0	12.0	19.0	11.5	13.5	1.10	1.0
20157319	10.0	19.0	29.0	18.0	22.0	1.30	1.0
20157326	20.0	32.0	45.0	30.3	31.5	1.60	2.0
20157432	6.0	12.0	19.0	11.5	13.5	1.10	1.0
20157449	10.0	19.0	29.0	18.0	22.0	1.30	1.0

Flanged Linear Ball Bushings

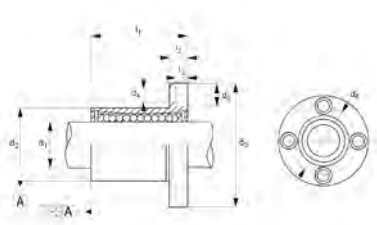

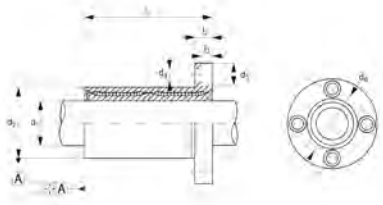



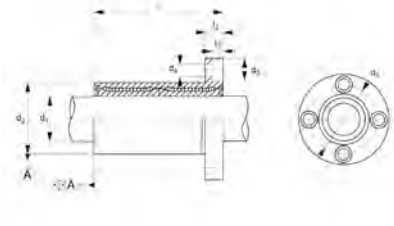

Features

- Low friction for reduced wear, plus high load-carrying capacity, minimizing stress concentration.
- Composed of a housing with a row of 4-6 round ball circuits housed in a cage.
- The mounting flange allows the bushing to be easily mounted to a surface using bolts or screws.

Specifications

Material: Steel, Stainless Steel

These Flanged Linear Ball Bushings are used in linear motion applications to provide smooth and precise movement along a linear axis. Composed of a housing with a row of 4-6 round ball circuits housed in a cage. The mounting flange allows the bushing to be easily mounted to a surface using bolts or screws. In Long Flanged Linear Ball Bushings, the increase in length gives them greater load capacity and greater stability in comparison with same size standard ball bushings.

They have low friction for reduced wear, plus high load-carrying capacity as the ball bearings distribute the load evenly across the bushing, minimizing stress concentration and extending the system's service life.

It can withstand temperatures from -20C to +80C, and is ideal for applications such as automation systems, CNC machines, assembly systems, and manufacturing processes.

Flanged Linear Ball Bushings

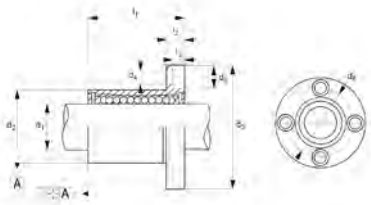

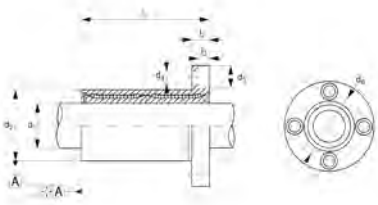



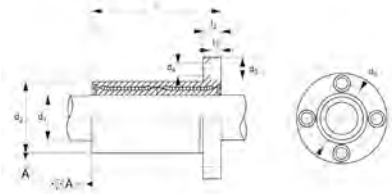

Part Number	d1 tol. h6	d2 tol. h6	l1	d3 tol. h4	d4	Type
20157456	6.0	12.0	19.0	28.0	3.4	Circular Flange
20156435	8.0	12.0	19.0	28.0	3.4	Circular Flange
20157463	10.0	19.0	29.0	40.0	4.5	Circular Flange
20156077	12.0	22.0	32.0	42.0	4.5	Circular Flange
20156138	16.0	26.0	36.0	46.0	4.5	Circular Flange
20156206	20.0	32.0	45.0	54.0	5.5	Circular Flange
20156275	25.0	40.0	58.0	62.0	5.5	Circular Flange
20156329	30.0	47.0	68.0	76.0	6.6	Circular Flange
20156350	40.0	62.0	80.0	98.0	9.0	Circular Flange
20156374	50.0	75.0	100.0	112.0	9.0	Circular Flange
20156398	60.0	90.0	125.0	134.0	11.0	Circular Flange
20157470	6.0	12.0	19.0	3.4	6.5	Square Flange
20156954	8.0	16.0	25.0	3.4	6.5	Square Flange
20157487	10.0	19.0	29.0	4.5	8.0	Square Flange
20156596	12.0	22.0	32.0	4.5	8.0	Square Flange
20156657	16.0	26.0	36.0	4.5	8.0	Square Flange
20156725	20.0	32.0	45.0	5.5	9.5	Square Flange
20156794	25.0	40.0	58.0	5.5	9.5	Square Flange
20156848	30.0	47.0	68.0	6.6	11.0	Square Flange
20156879	40.0	62.0	80.0	9.0	14.0	Square Flange
20156893	50.0	75.0	100.0	9.0	14.0	Square Flange
20156916	60.0	90.0	125.0	11.0	17.5	Square Flange

Flanged Linear Ball Bushings

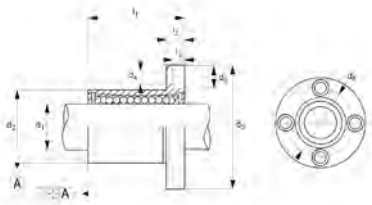

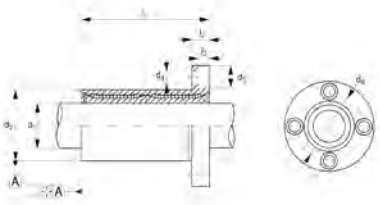



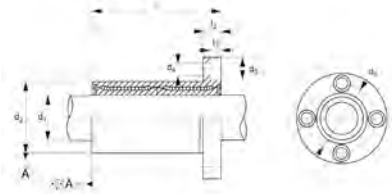

Part Number	d1 tol. h6	d2 tol. h6	l1	d3 tol. h4	d4	Type
20157579	6.0	12.0	35.0	28.0	3.4	Circular Flange
20156466	8.0	16.0	45.0	32.0	3.4	Circular Flange
20157586	10.0	19.0	55.0	40.0	4.5	Circular Flange
20156107	12.0	22.0	57.0	42.0	4.5	Circular Flange
20156169	16.0	26.0	70.0	46.0	4.5	Circular Flange
20156237	20.0	32.0	80.0	54.0	5.5	Circular Flange
20156305	25.0	40.0	112.0	62.0	5.5	Circular Flange
20156336	30.0	47.0	123.0	76.0	6.6	Circular Flange
20156367	40.0	62.0	154.0	98.0	9.0	Circular Flange
20156381	50.0	75.0	192.0	112.0	9.0	Circular Flange
20156404	60.0	90.0	211.0	134.0	11.0	Circular Flange
20157593	6.0	12.0	35.0	3.4	6.5	Square Flange
20156985	8.0	16.0	45.0	3.4	6.5	Square Flange
20157609	10.0	19.0	55.0	4.5	8.0	Square Flange
20156626	12.0	22.0	57.0	4.5	8.0	Square Flange
20156688	16.0	26.0	70.0	4.5	8.0	Square Flange
20156756	20.0	32.0	80.0	5.5	9.5	Square Flange
20156824	25.0	40.0	112.0	5.5	9.5	Square Flange
20156855	30.0	47.0	123.0	6.6	11.0	Square Flange
20156886	40.0	62.0	154.0	9.0	14.0	Square Flange
20156909	50.0	75.0	192.0	9.0	14.0	Square Flange
20156923	60.0	90.0	211.0	11.0.	17.5	Circular Flange

Flanged Linear Ball Bushings

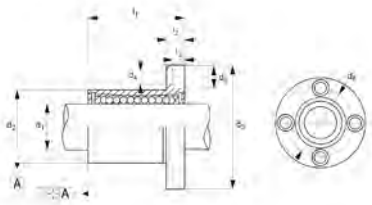

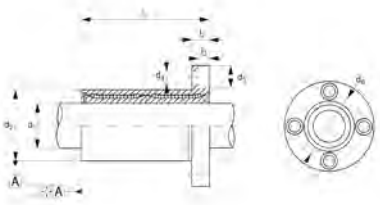



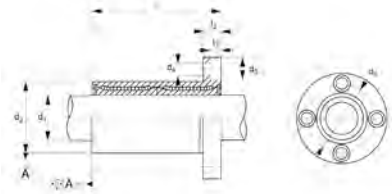

Part Number	d1 tol. h6	d2 tol. h6	l1	d3 tol. h4	d4	Type
20156084	12.0	22.0	57.0	42.0	4.5	Long Version, Circular Flange
20156091	12.0	22.0	57.0	42.0	4.5	Long Version, Circular Flange
20156145	16.0	26.0	70.0	46.0	4.5	Long Version, Circular Flange
20156152	16.0	26.0	70.0	46.0	4.5	Long Version, Circular Flange
20156213	20.0	32.0	80.0	54.0	5.5	Long Version, Circular Flange
20156220	20.0	32.0	80.0	54.0	5.5	Long Version, Circular Flange
20156282	25.0	40.0	112.0	62.0	5.5	Long Version, Circular Flange
20156299	25.0	40.0	112.0	62.0	5.5	Long Version, Circular Flange
20156442	8.0	16.0	45.0	32.0	3.4	Long Version, Circular Flange
20156459	8.0	16.0	45.0	32.0	3.4	Long Version, Circular Flange
20157616	6.0	12.0	35.0	28.0	3.4	Long Version, Circular Flange
20157623	10.0	19.0	55.0	40.0	4.5	Long Version, Circular Flange
20157654	6.0	12.0	35.0	28.0	3.4	Long Version, Circular Flange
20157661	10.0	19.0	55.0	40.0	4.5	Long Version, Circular Flange
20156602	12.0	22.0	57.0	4.5	8.0	Square Flange
20156619	12.0	22.0	57.0	4.5	8.0	Square Flange
20156664	16.0	26.0	70.0	4.5	8.0	Square Flange
20156671	16.0	26.0	70.0	4.5	8.0	Square Flange
20156978	8.0	16.0	45.0	3.4	6.5	Square Flange
20156961	8.0	16.0	45.0	3.4	6.5	Square Flange
20157685	10.0	19.0	55.0	4.5	8.0	Square Flange
20157647	10.0	19.0	55.0	4.5	8.0	Square Flange

Flanged Linear Ball Bushings

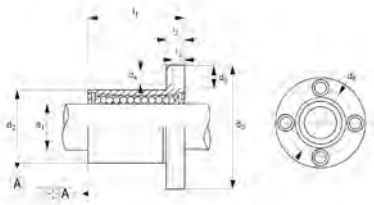

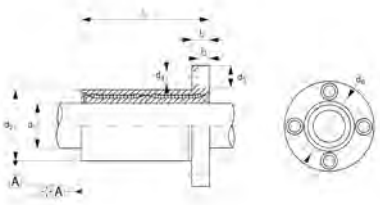



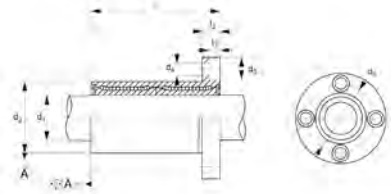

Part Number	d1 tol. h6	d2 tol. h6	l1	d3 tol. h4	d4	Type
20156732	20.0	32.0	80.0	5.5	9.5	Square Flange
20157630	6.0	12.0	35.0	3.4	6.5	Square Flange
20157678	6.0	12.0	35.0	3.4	6.5	Square Flange
20156817	25.0	40.0	112.0	5.5	9.5	Square Flange
20156800	25.0	40.0	112.0	5.5	9.5	Square Flange
20156749	20.0	32.0	80.0	5.5	9.5	Square Flange
20156411	8.0	16.0	25.0	32.0	3.4	Circular Flange
20156633	16.0	26.0	36.0	4.5	8.0	Square Flange
20157531	6.0	12.0	19.0	28.0	3.4	Circular Flange
20157548	10.0	19.0	29.0	40.0	4.5	Circular Flange
20157500	10.0	19.0	29.0	40.0	4.5	Circular Flange
20156770	25.0	40.0	58.0	5.5	9.5	Square Flange
20156718	20.0	32.0	45.0	5.5	9.5	Square Flange
20156060	12.0	22.0	32.0	42.0	4.5	Circular Flange
20156787	25.0	40.0	58.0	5.5	9.5	Square Flange
20156589	12.0	22.0	32.0	4.5	8.0	Square Flange
20157517	6.0	12.0	19.0	3.4	6.5	Square Flange
20156114	16.0	26.0	36.0	46.0	4.5	Circular Flange
20156268	25.0	40.0	58.0	62.0	5.5	Circular Flange
20157562	10.0	19.0	29.0	4.5	8.0	Square Flange
20156640	16.0	26.0	36.0	4.5	8.0	Square Flange
20156121	16.0	26.0	36.0	46.0	4.5	Circular Flange

Flanged Linear Ball Bushings

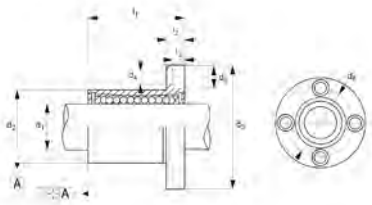

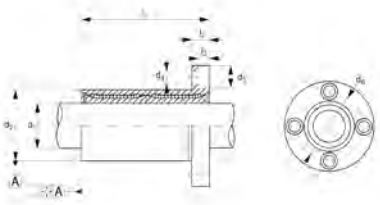



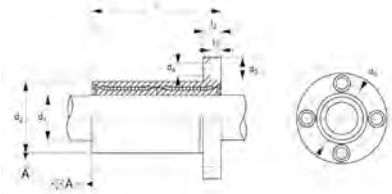

Part Number	d1 tol. h6	d2 tol. h6	l1	d3 tol. h4	d4	Type
20157494	6.0	12.0	19.0	28.0	3.4	Circular Flange
20156190	20.0	32.0	45.0	54.0	5.5	Circular Flange
20157555	6.0	12.0	19.0	3.4	6.5	Square Flange
20157524	10.0	19.0	29.0	4.5	8.0	Square Flange
20156251	25.0	40.0	58.0	62.0	5.5	Circular Flange
20156572	12.0	22.0	32.0	4.5	8.0	Square Flange
20156183	20.0	32.0	45.0	54.0	5.5	Circular Flange
20156930	8.0	16.0	25.0	3.4	6.5	Square Flange
20156428	8.0	16.0	25.0	32.0	3.4	Circular Flange
20156947	8.0	16.0	25.0	3.4	6.5	Square Flange
20156053	12.0	22.0	32.0	42.0	4.5	Circular Flange
20156701	20.0	32.0	45.0	5.5	9.5	Square Flange
20156695	16.0	26.0	70.0	46.0	4.5	Square Flange
20156763	20.0	32.0	80.0	54.0	5.5	Square Flange
20156831	25.0	40.0	112.0	62.0	5.5	Square Flange
20156862	30.0	47.0	123.0	76.0	6.6	Square Flange
20157784	60.0	90.0	211.0	134.0	11.0	Square Flange
20158064	8.0	16.0	45.0	32.0	3.4	Square Flange
20158071	12.0	22.0	57.0	42.0	4.5	Square Flange
20158088	40.0	62.0	154.0	98.0	9.0	Square Flange
20158095	50.0	75.0	192.0	112.0	9.0	Square Flange
20156244	20.0	32.0	80.0		5.5	Circular Flange

Flanged Linear Ball Bushings

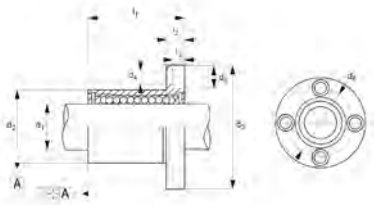

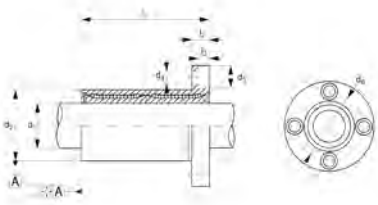



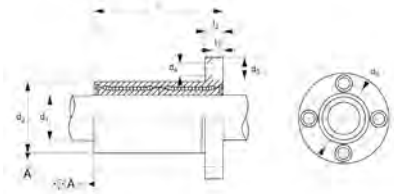

Part Number	d1 tol. h6	d2 tol. h6	l1	d3 tol. h4	d4	Type
20158019	8.0	16.0	45.0		3.4	Circular Flange
20158026	12.0	22.0	57.0		4.5	Circular Flange
20158033	40.0	62.0	154.0		9.0	Circular Flange
20158040	50.0	75.0	192.0		9.0	Circular Flange
20158057	60.0	90.0	211.0		11.0	Circular Flange
20156176	16.0	26.0	70.0		4.5	Circular Centre Flange
20156312	25.0	40.0	112.0		5.5	Circular Centre Flange
20156343	30.0	47.0	123.0		6.6	Circular Centre Flange

Long Centre Flange Linear Ball Bushings

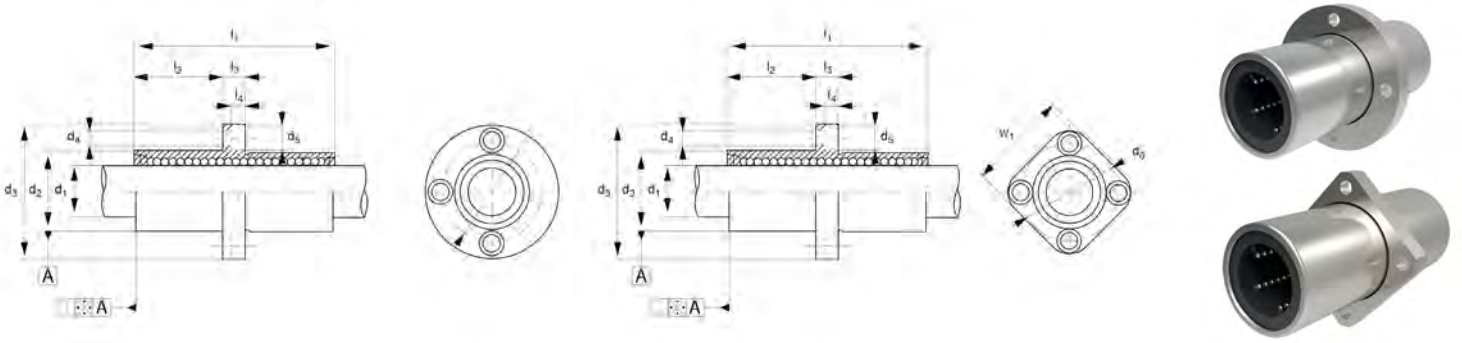

Features

- Have seals which also helps to protect the internal components of the bearing from dust and dirt.
- It can withstand temperatures from -20C to +80C.
- Ideal for applications such as automation systems, food packaging machines, and manufacturing processes.

Speci ications

Material: Stainless Steel

Long Centre Flanged Linear Ball Bushings are used in linear motion applications to provide smooth and precise movement along a linear axis. The flange in the centre allows for easy mounting and the increased length offers greater load carrying capabilities. Composed of a housing with a row of 4-6 round ball circuits housed in a cage.

It has low friction for reduced wear, plus they can withstand heavy loads as the ball bearings distribute the load evenly across the bushing, minimizing stress concentration and extending the system's service life. It has seals which also helps to protect the internal components of the bearing from dust and dirt.

It can withstand temperatures from -20C to +80C and is ideal for applications such as automation systems, food packaging machines, and manufacturing processes.

Long Centre Flange Linear Ball Bushings

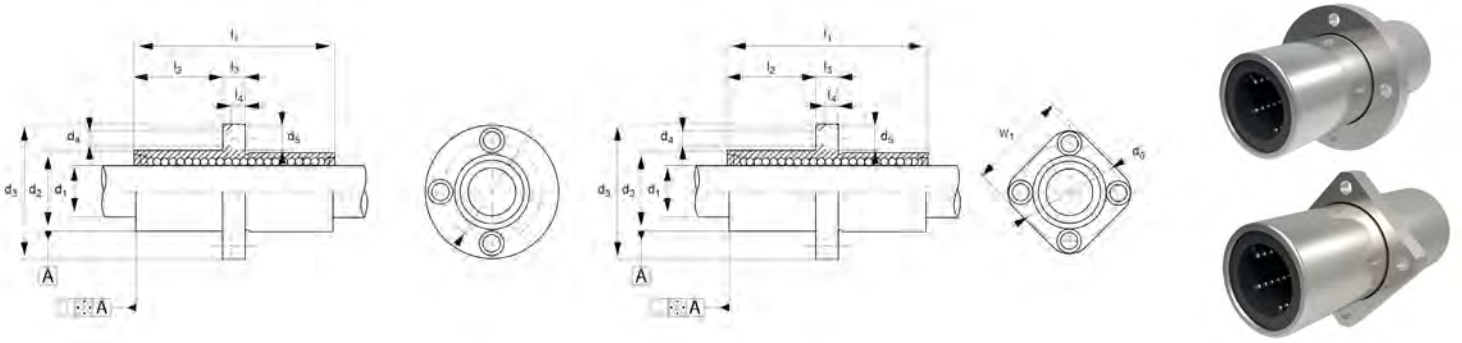

Part Number	d1 tol. h6	d2 tol. h6	l1	d3	d4	d5	d6
20156473	12.0	21.0	57.0	42.0	4.5	8.0	32.0
20156480	12.0	21.0	57.0	42.0	4.5	8.0	32.0
20156497	16.0	26.0	70.0	46.0	4.5	8.0	36.0
20156503	16.0	26.0	70.0	46.0	4.5	8.0	36.0
20156510	20.0	32.0	80.0	54.0	5.5	9.5	43.0
20156527	20.0	32.0	80.0	54.0	5.5	9.5	43.0
20156534	25.0	40.0	112.0	62.0	5.5	9.5	51.0
20156541	25.0	40.0	112.0	62.0	5.5	9.5	51.0
20156558	8.0	15.0	45.0	32.0	3.4	6.5	24.0
20156565	8.0	15.0	45.0	32.0	3.4	6.5	24.0
20157692	6.0	12.0	35.0	28.0	3.4	6.5	20.0
20157708	10.0	19.0	55.0	40.0	4.5	8.0	29.0
20157739	6.0	12.0	35.0	28.0	3.4	6.5	20.0
20157746	10.0	19.0	55.0	40.0	4.5	8.0	29.0
20156992	12.0	21.0	57.0	32.0	4.5	8.0	32.0
20157005	12.0	21.0	57.0	32.0	4.5	8.0	32.0
20157012	16.0	26.0	70.0	36.0	4.5	8.0	35.0
20157029	16.0	26.0	70.0	36.0	4.5	8.0	35.0
20157036	20.0	32.0	80.0	43.0	5.5	9.5	42.0
20157043	20.0	32.0	80.0	43.0	5.5	9.5	42.0
20157050	25.0	40.0	112.0	51.0	5.5	9.5	50.0
20157067	25.0	40.0	112.0	51.0	5.5	9.5	50.0
20157074	8.0	15.0	45.0	24.0.	3.4	6.5	24.0

Long Centre Flange Linear Ball Bushings

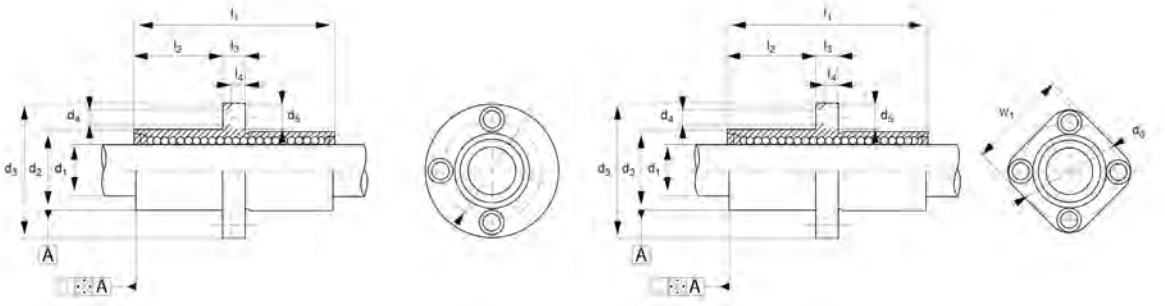



Part Number	d1 tol. h6	d2 tol. h6	l1	d3	d4	d5	d6
20157081	8.0	15.0	45.0	24.0.	3.4	6.5	24.0
20157715	6.0	12.0	35.0	20.0	3.4	6.5	20.0
20157722	10.0	19.0	55.0	29.0	4.5	8.0	29.0
20157753	6.0	12.0	35.0	20.0	3.4	6.5	20.0
20157760	10.0	19.0	55.0	29.0	4.5	8.0	29.0

Superball Closed Linear Ball Bushings

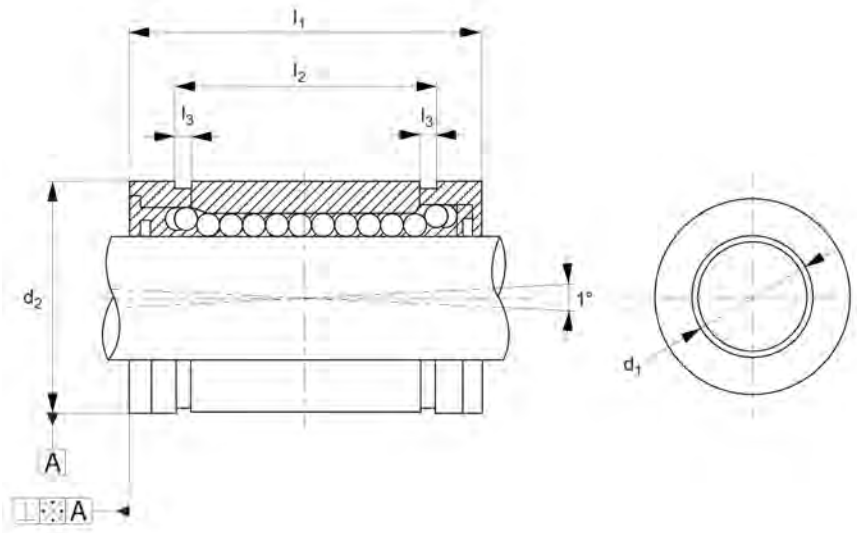



Features

- This bushing type has three times the load capacity and a life span of 27 times that of traditional linear bushings.
- Provide self-alignment, which extends travel life by minimising friction between the shaft and balls.
- It has a closed design that shields the interior bearing components from dust, dirt, and other contaminants.

Specifications

Material: Steel

Superball Closed Linear Ball Bushings are used in demanding applications and are designed to provide high precision movement and smooth motion. Composed of a housing with a row of 4-6 round ball circuits housed in a cage. This bushing type has three times the load capacity and a life span of 27 times that of traditional linear bushings. They provide self-alignment, which extends travel life by minimising friction between the shaft and balls and allowing for slight misalignments between the shaft and the bearing.

It has a closed design that shields the interior bearing components from dust, dirt, and other contaminants and is only intended for use with hardened shafts.

It can withstand temperatures from -20C to +80C and is ideal for applications such as automation systems, food packaging machines, and manufacturing processes.

Superball Closed Linear Ball Bushings

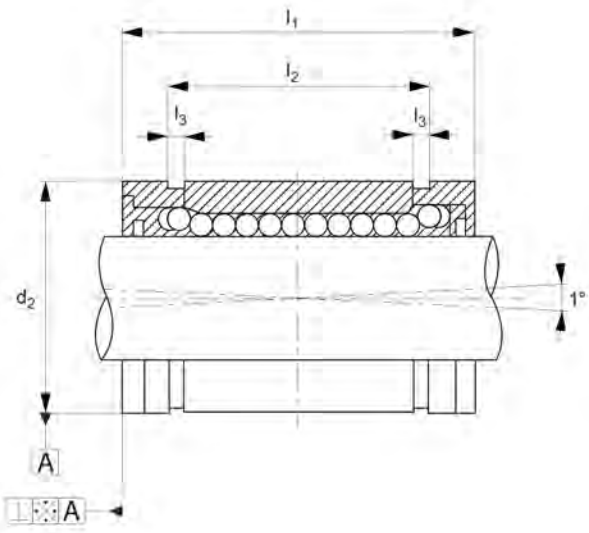



Part Number	d1 tol. h6	d2 tol. h6	l1	l2	l3	No. of ball circuits	Dyn. load C max. N
20157098	10.0	19.0	29.0	21.7	1.35	5.0	550.0
20157104	12.0	22.0	32.0	22.7	1.35	5.0	1100.0
20157128	16.0	26.0	36.0	24.7	1.35	5.0	1250.0
20157142	20.0	32.0	45.0	31.3	1.65	6.0	1670.0
20157166	25.0	40.0	58.0	43.8	1.90	6.0	2750.0
20157180	30.0	47.0	68.0	51.8	1.90	6.0	2800.0
20157203	40.0	62.0	80.0	60.4	2.20	6.0	5720.0
20157227	50.0	75.0	100.0	77.4	2.70	6.0	7940.0
20157852	10.0	19.0	29.0	21.7	1.35	5.0	550.0
20157869	12.0	22.0	32.0	22.7	1.35	5.0	1100.0
20157876	16.0	26.0	36.0	24.7	1.35	5.0	1250.0
20157883	20.0	32.0	45.0	31.3	1.65	6.0	1670.0
20157890	25.0	40.0	58.0	43.8	1.90	6.0	2750.0
20157906	30.0	47.0	68.0	51.8	1.90	6.0	2800.0
20157913	40.0	62.0	80.0	60.4	2.20	6.0	5720.0
20157920	50.0	75.0	100.0	77.4	2.70	6.0	7940.0

Superball Open Linear Ball Bushings

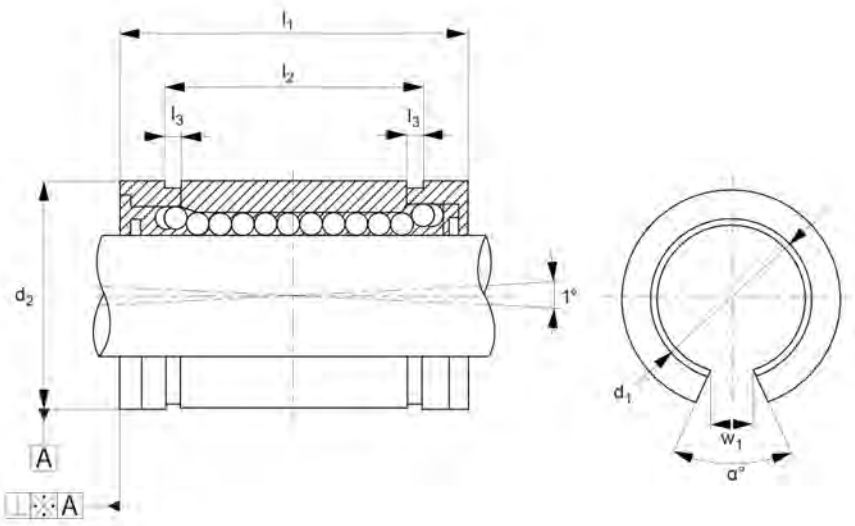



Features

- This bushing type has three times the load capacity and a life span of 27 times that of traditional linear bushings.
- Have an open part design that permits them to be used in cojunction with shaft support rails.
- It provides self-alignment, which extends travel life by minimising friction between the shaft and balls.

Specifications

Material: Nickel Plated Steel, Steel

Superball Open Linear Ball Bushings are intended for high precision movement and smooth motion in demanding applications. Composed of a housing with a row of 4-6 round ball circuits housed in a cage. This bushing type has three times the load capacity and a life span of 27 times that of traditional linear bushings and is only intended for use with hardened shafts. They have an open part design that permits them to be used in cojunction with shaft support rails.

It provides self-alignment, which extends travel life by minimising friction between the shaft and balls and allowing for slight misalignments between the shaft and the bearing.

It can withstand temperatures from -20C to +80C and is ideal for applications such as automation systems, food packaging machines, and manufacturing processes.

Superball Open Linear Ball Bushings

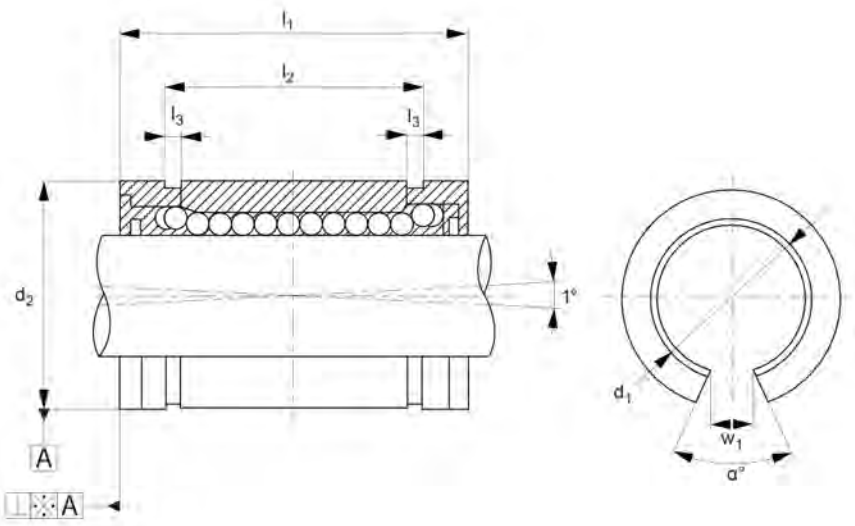



Part Number	d1 tol. h6	d2 tol. h6	l1	l2	l3	Dyn. load C max. N	w1
20157111	12.0	22.0	32.0	22.7	1.35	1260.0	6.5
20157135	16.0	26.0	36.0	24.7	1.35	1320.0	9.0
20157159	20.0	32.0	45.0	31.3	1.65	1720.0	9.0
20157173	25.0	40.0	58.0	43.8	1.90	2850.0	11.5
20157197	30.0	47.0	68.0	81.8	1.90	2900.0	14.0
20157210	40.0	62.0	80.0	60.4	2.20	5900.0	19.5
20157234	50.0	75.0	100.0	77.4	2.70	8100.0	22.5
20157937	12.0	22.0	32.0	22.7	1.35	1260.0	6.5
20157944	16.0	26.0	36.0	24.7	1.35	1320.0	9.0
20157951	20.0	32.0	45.0	31.3	1.65	1720.0	9.0
20157968	25.0	40.0	58.0	43.8	1.90	2850.0	11.5
20157975	30.0	47.0	68.0	81.8	1.90	2900.0	14.0
20157982	40.0	62.0	80.0	60.4	2.20	5900.0	19.5
20157999	50.0	75.0	100.0	77.4	2.70	8100.0	22.5

Linear Carriages - Closed

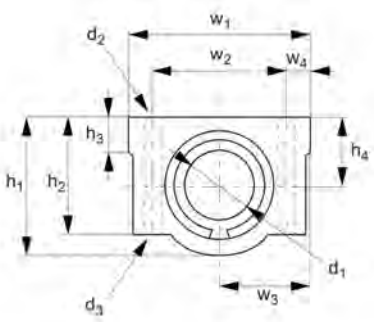

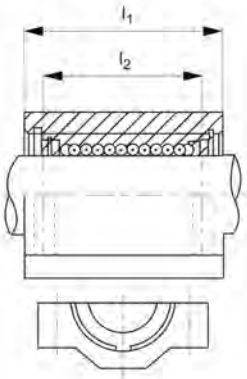

size 40/50



Features

- Used in linear motion systems to guide and support moving parts.
- It can withstand temperatures from 20C to +80C.
- It keeps the weight down, take the loads and facilitate the movement.

Specifications

Material: Aluminium

These Linear Bushing Carriages are used in linear motion systems to guide and support moving parts. The housing offers an easy solution when mounting this carriage to the moving part in the application.

The aluminium housing helps to keep the weight down whilst the hardened steel balls inside the bushing take the loads and facilitate the movement. Only to be used on hardened linear shafts.

It can withstand temperatures from 20C to +80C. However, steel ball retainers can be provided for higher temperature applications up to +120C without end seals. Commonly used in applications such as food packaging machines, printing machines, computers, or tool grinders.

Linear Carriages - Closed

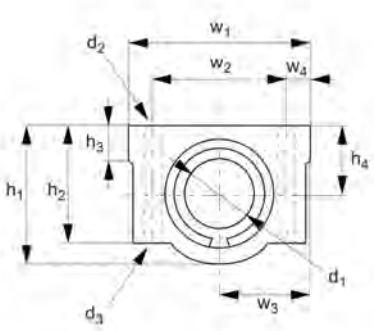

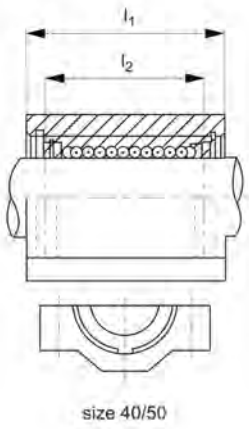

size 40/50



Part Number	Carriage Style	d1 tol H6	l1	d2	d3	h1	Ball Cage Material
20263225	Standard	8.0	30.0	M4x8	3.4	22.0	Resin
20263287	Standard	12.0	39.0	M5x10	4.3	30.0	Resin
20263256	Standard	16.0	44.0	M5x12	4.3	38.5	Resin
20262778	Standard	20.0	53.0	M6x12	5.2	41.0	Resin
20262839	Standard	25.0	67.0	M8x18	6.8	51.5	Resin
20262808	Standard	30.0	76.0	M8x18	6.8	59.5	Resin
20262860	Standard	40.0	90.0	M10x25	8.6	78.0	Resin
20262921	Standard	50.0	110.0	M10x25	8.6	102.0	Resin
20262891	Long	8.0	58.0	M4X8	3.4	22.0	Resin
20262952	Long	12.0	77.0	M5x10	4.3	30.0	Resin
20263669	Long	16.0	89.0	M5x12	4.3	38.5	Resin
20262983	Long	20.0	106.0	M6x12	5.2	41.0	Resin
20263041	Long	25.0	136.0	M8x18	6.8	51.5	Resin
20263102	Long	30.0	154.0	M8x18	6.8	59.5	Resin
20263072	Long	40.0	180.0	M10x25	8.6	78.0	Resin
20263119	Long	50.0	230.0	M10x25	8.6	102.0	Resin
20263133	Short	8.0	14.4	M4x8	3.4	22.0	Resin
20263126	Short	12.0	20.3	M5x10	4.3	30.0	Resin
20263140	Short	16.0	22.3	M5x12	4.3	38.5	Resin
20263164	Short	20.0	28.3	M6x12	5.2	41.0	Resin
20263157	Short	25.0	40.4	M8x18	6.8	51.5	Resin
20263171	Short	30.0	48.4	M8x18	6.8	59.5	Resin
20263195	Short	40.0	56.4	M10x25	8.6	78.0	Resin

Linear Carriages - Closed

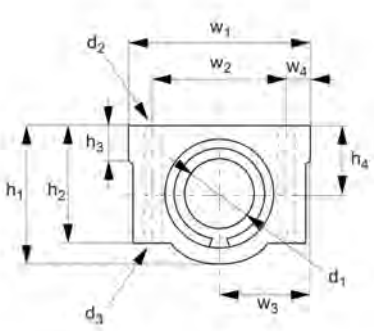

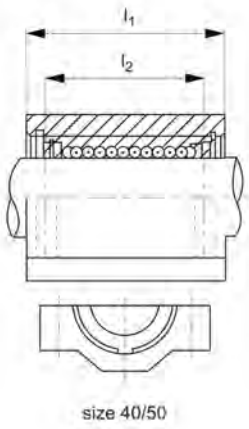

size 40/50



Part Number	Carriage Style	d1 tol H6	l1	d2	d3	h1	Ball Cage Material
20263188	Short	50.0	72.3	M10x25	8.6	102.0	Resin
20263232	Normal	8.0	30.0	M4x8	3.4	22.0	Resin
20263218	Normal	12.0	39.0	M5x10	4.3	30.0	Resin
20263201	Normal	16.0	44.0	M5x12	4.3	38.5	Resin
20263270	Normal	20.0	53.0	M6x12	5.2	41.0	Resin
20263263	Normal	25.0	67.0	M8x18	6.8	51.5	Resin
20263249	Normal	8.0	30.0	M4x8	3.4	22.0	Stainless
20262785	Normal	12.0	39.0	M5x10	4.3	30.0	Stainless
20262761	Normal	16.0	44.0	M5x12	4.3	38.5	Stainless
20262754	Normal	20.0	53.0	M6x12	5.2	41.0	Stainless
20262822	Normal	25.0	67.0	M8x18	6.8	51.5	Stainless
20262815	Long	8.0	58.0	M4x8	3.4	22.0	Resin
20262792	Long	12.0	77.0	M5x10	4.3	30.0	Resin
20262877	Long	16.0	89.0	M5x12	4.3	38.5	Resin
20262853	Long	20.0	106.0	M6x12	5.2	41.0	Resin
20262846	Long	25.0	136.0	M8x18	6.8	51.5	Resin
20262914	Long	8.0	58.0	M4x8	3.4	22.0	Stainless
20262907	Long	12.0	77.0	M5x10	4.3	30.0	Stainless
20262884	Long	16.0	89.0	M5x12	4.3	38.5	Stainless
20262969	Long	20.0	106.0	M6x12	5.2	41.0	Stainless
20262945	Long	25.0	136.0	M8x18	6.8	51.5	Stainless
20262938	Short	8.0	14.4	M4x8	3.4	22.0	Resin
20263003	Short	12.0	20.3	M5x10	4.3	30.0	Resin

Linear Carriages - Closed

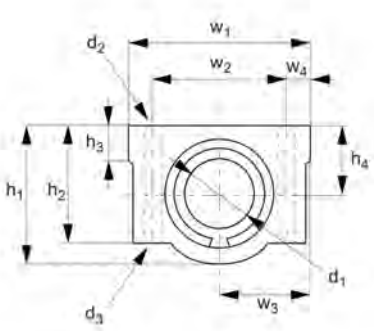

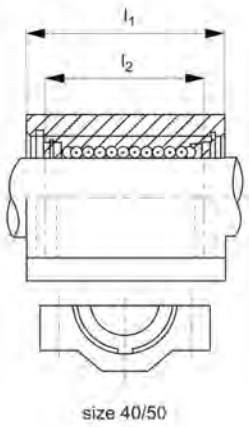

size 40/50



Part Number	Carriage Style	d1 tol H6	l1	d2	d3	h1	Ball Cage Material
20262990	Short	16.0	22.3	M5x12	4.3	38.5	Resin
20262976	Short	20.0	28.3	M6x12	5.2	41.0	Resin
20263058	Short	25.0	40.4	M8x18	6.8	51.5	Resin
20263034	Short	8.0	14.4	M4x8	3.4	22.0	Stainless
20263027	Short	12.0	20.3	M5x10	4.3	30.0	Stainless
20263096	Short	16.0	22.3	M5x12	4.3	38.5	Stainless
20263089	Short	20.0	28.3	M6x12	5.2	41.0	Stainless
20263065	Short	25.0	40.3	M8x18	6.8	51.5	Stainless

Shaft Support Rails

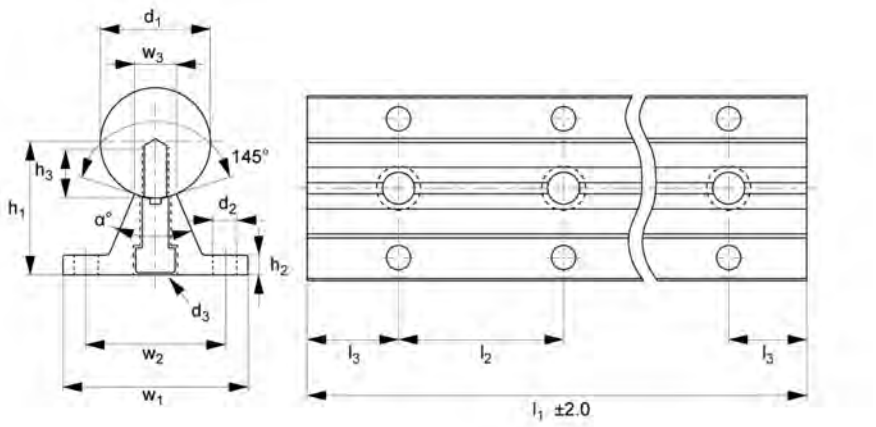



Features

- Used to provide continuous support and stability for linear shafts.
- These rails are used with open linear bearings or carriages to create a linear motion system.
- It has great durability and wear resistance, tolerating high application loads and repetitive motion.

Specifications

Material: Aluminium, Stainless Steel, Steel

These Shaft support rails are used to provide continuous support and stability for linear shafts. They are frequently used with linear bearings to provide a fully supported low friction system.

It comes with a hardened steel shaft and mounting holes to mount and support across its entire length. These rails are used with open linear bearings or carriages to create a linear motion system.

The shaft is pre-mounted to the shaft support rail. It has great durability and wear resistance, allowing it to tolerate high application loads and repetitive motion. It is widely used in industrial, automotive, medical devices, and electronics manufacturing.

Shaft Support Rails

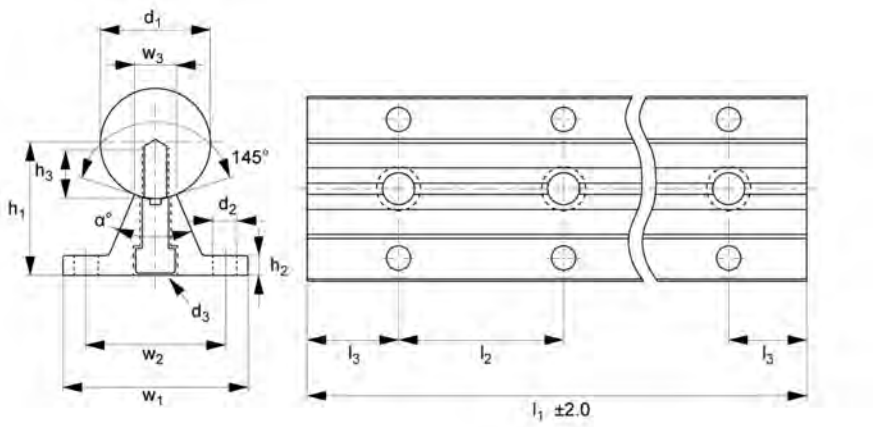



Part Number	Rail Type	d1 tol. h6	d2	d3	l1	l2	Material
20267698	Shaft & Rail	12.0	4.5	M4x20	240.0	120.0	Steel
20267704	Shaft & Rail	12.0	4.5	M4x20	360.0	120.0	Steel
20267711	Shaft & Rail	12.0	4.5	M4x20	480.0	120.0	Steel
20267728	Shaft & Rail	12.0	4.5	M4x20	600.0	120.0	Steel
20267735	Shaft & Rail	12.0	4.5	M4x20	720.0	120.0	Steel
20267742	Shaft & Rail	12.0	4.5	M4x20	840.0	120.0	Steel
20267759	Shaft & Rail	12.0	4.5	M4x20	960.0	120.0	Steel
20267766	Shaft & Rail	12.0	4.5	M4x20	1080.0	120.0	Steel
20267773	Shaft & Rail	12.0	4.5	M4x20	1200.0	120.0	Steel
20267780	Shaft & Rail	12.0	4.5	M4x20	1320.0	120.0	Steel
20267797	Shaft & Rail	12.0	4.5	M4x20	1440.0	120.0	Steel
20267803	Shaft & Rail	12.0	4.5	M4x20	1560.0	120.0	Steel
20267810	Shaft & Rail	12.0	4.5	M4x20	1680.0	120.0	Steel
20267827	Shaft & Rail	12.0	4.5	M4x20	1800.0	120.0	Steel
20267834	Shaft & Rail	12.0	4.5	M4x20	1920.0	120.0	Steel
20267841	Shaft & Rail	12.0	4.5	M4x20	2040.0	120.0	Steel
20267858	Shaft & Rail	12.0	4.5	M4x20	2160.0	120.0	Steel
20267865	Shaft & Rail	12.0	4.5	M4x20	2280.0	120.0	Steel
20267872	Shaft & Rail	12.0	4.5	M4x20	240.0	120.0	Steel
20267889	Shaft & Rail	12.0	4.5	M4x20	2520.0	120.0	Steel
20267896	Shaft & Rail	12.0	4.5	M4x20	2640.0	120.0	Steel

Shaft Support Rails

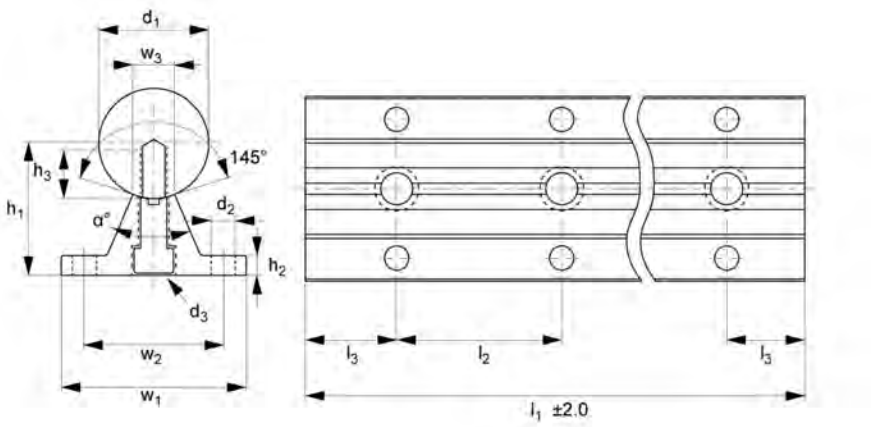



Part Number	Rail Type	d1 tol. h6	d2	d3	l1	l2	Material
20267902	Shaft & Rail	12.0	4.5	M4x20	2760.0	120.0	Steel
20267919	Shaft & Rail	12.0	4.5	M4x20	2880.0	120.0	Steel
20267926	Shaft & Rail	12.0	4.5	M4x20	3000.0	120.0	Steel
20267933	Shaft & Rail	12.0	4.5	M4x20	3120.0	120.0	Steel
20267940	Shaft & Rail	12.0	4.5	M4x20	3240.0	120.0	Steel
20267957	Shaft & Rail	12.0	4.5	M4x20	3360.0	120.0	Steel
20267964	Shaft & Rail	12.0	4.5	M4x20	3480.0	120.0	Steel
20267971	Shaft & Rail	12.0	4.5	M4x20	360.0	120.0	Steel
20267988	Shaft & Rail	12.0	4.5	M4x20	3720.0	120.0	Steel
20267995	Shaft & Rail	12.0	4.5	M4x20	3840.0	120.0	Steel
20268008	Shaft & Rail	12.0	4.5	M4x20	3960.0	120.0	Steel
20268015	Shaft & Rail	12.0	4.5	M4x20	4080.0	120.0	Steel
20268022	Shaft & Rail	12.0	4.5	M4x20	4200.0	120.0	Steel
20268039	Shaft & Rail	12.0	4.5	M4x20	4320.0	120.0	Steel
20268046	Shaft & Rail	12.0	4.5	M4x20	4440.0	120.0	Steel
20268053	Shaft & Rail	12.0	4.5	M4x20	4560.0	120.0	Steel
20268060	Shaft & Rail	12.0	4.5	M4x20	4680.0	120.0	Steel
20268077	Shaft & Rail	12.0	4.5	M4x20	480.0	120.0	Steel
20268084	Shaft & Rail	12.0	4.5	M4x20	4920.0	120.0	Steel
20268091	Shaft & Rail	12.0	4.5	M4x20	5040.0	120.0	Steel
20268107	Shaft & Rail	12.0	4.5	M4x20	5150.0	120.0	Steel

Shaft Support Rails

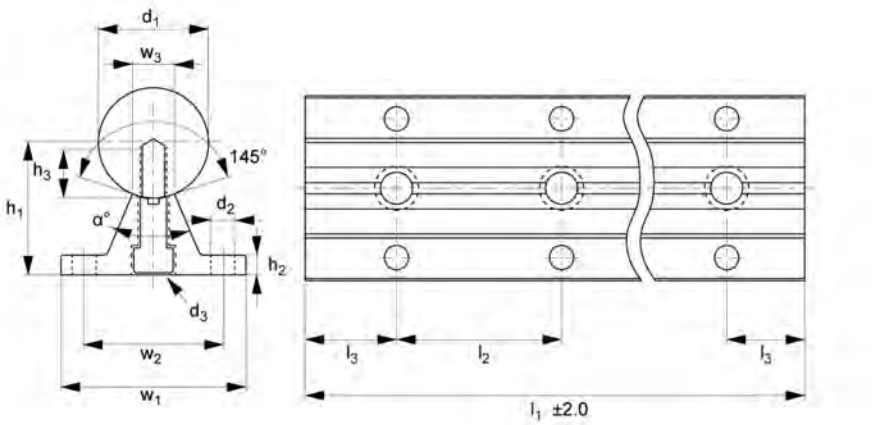



Part Number	Rail Type	d1 tol. h6	d2	d3	l1	l2	Material
20268114	Shaft & Rail	12.0	4.5	M4x20	5280.0	120.0	Steel
20268121	Shaft & Rail	12.0	4.5	M4x20	5400.0	120.0	Steel
20268138	Shaft & Rail	12.0	4.5	M4x20	5520.0	120.0	Steel
20268145	Shaft & Rail	12.0	4.5	M4x20	5640.0	120.0	Steel
20268152	Shaft & Rail	12.0	4.5	M4x20	5760.0	120.0	Steel
20268169	Shaft & Rail	12.0	4.5	M4x20	5880.0	120.0	Steel
20268176	Shaft & Rail	12.0	4.5	M4x20	600.0	120.0	Steel
20268183	Shaft & Rail	16.0	5.5	M5x20	300.0	150.0	Steel
20268190	Shaft & Rail	16.0	5.5	M5x20	450.0	150.0	Steel
20268206	Shaft & Rail	16.0	5.5	M5x20	600.0	150.0	Steel
20268213	Shaft & Rail	16.0	5.5	M5x20	750.0	150.0	Steel
20268220	Shaft & Rail	16.0	5.5	M5x20	900.0	150.0	Steel
20268237	Shaft & Rail	16.0	5.5	M5x20	1050.0	150.0	Steel
20268244	Shaft & Rail	16.0	5.5	M5x20	1200.0	150.0	Steel
20270261	Shaft & Rail	16.0	5.5	M5x20	1350.0	150.0	Steel
20267681	Shaft & Rail	16.0	5.5	M5x20	1500.0	150.0	Steel
20268251	Shaft & Rail	16.0	5.5	M5x20	1650.0	150.0	Steel
20268268	Shaft & Rail	16.0	5.5	M5x20	1800.0	150.0	Steel
20268275	Shaft & Rail	16.0	5.5	M5x20	1950.0	150.0	Steel
20268282	Shaft & Rail	16.0	5.5	M5x20	2100.0	150.0	Steel
20268299	Shaft & Rail	16.0	5.5	M5x20	2250.0	150.0	Steel

Shaft Support Rails

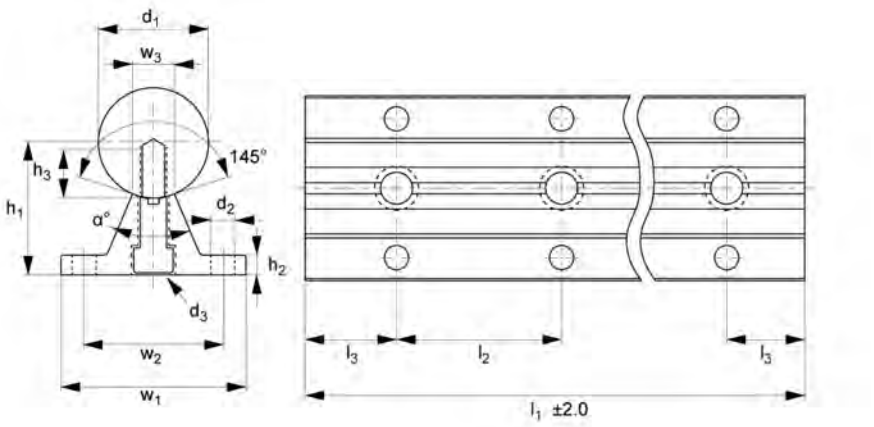



Part Number	Rail Type	d1 tol. h6	d2	d3	l1	l2	Material
20268305	Shaft & Rail	16.0	5.5	M5x20	240.0	150.0	Steel
20268312	Shaft & Rail	16.0	5.5	M5x20	2550.0	150.0	Steel
20268329	Shaft & Rail	16.0	5.5	M5x20	2700.0	150.0	Steel
20268336	Shaft & Rail	16.0	5.5	M5x20	2850.0	150.0	Steel
20268343	Shaft & Rail	16.0	5.5	M5x20	3000.0	150.0	Steel
20268350	Shaft & Rail	16.0	5.5	M5x20	3150.0	150.0	Steel
20268367	Shaft & Rail	16.0	5.5	M5x20	3300.0	150.0	Steel
20268374	Shaft & Rail	16.0	5.5	M5x20	3450.0	150.0	Steel
20268381	Shaft & Rail	16.0	5.5	M5x20	360.0	150.0	Steel
20268398	Shaft & Rail	16.0	5.5	M5x20	3750.0	150.0	Steel
20268404	Shaft & Rail	16.0	5.5	M5x20	3900.0	150.0	Steel
20268411	Shaft & Rail	16.0	5.5	M5x20	4050.0	150.0	Steel
20268428	Shaft & Rail	16.0	5.5	M5x20	4200.0	150.0	Steel
20268435	Shaft & Rail	16.0	5.5	M5x20	4350.0	150.0	Steel
20268442	Shaft & Rail	16.0	5.5	M5x20	4500.0	150.0	Steel
20268459	Shaft & Rail	16.0	5.5	M5x20	4650.0	150.0	Steel
20268466	Shaft & Rail	16.0	5.5	M5x20	480.0	150.0	Steel
20268473	Shaft & Rail	16.0	5.5	M5x20	4950.0	150.0	Steel
20268480	Shaft & Rail	16.0	5.5	M5x20	5100.0	150.0	Steel
20268497	Shaft & Rail	16.0	5.5	M5x20	5250.0	150.0	Steel
20268503	Shaft & Rail	16.0	5.5	M5x20	5400.0	150.0	Steel

Shaft Support Rails

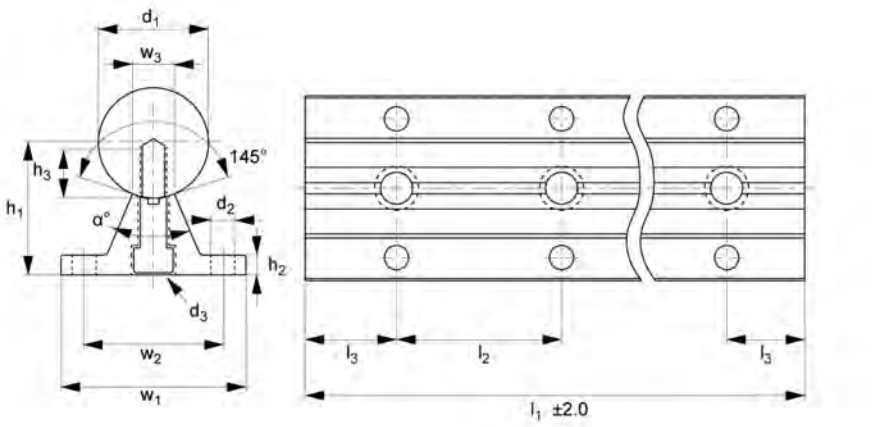



Part Number	Rail Type	d1 tol. h6	d2	d3	l1	l2	Material
20268510	Shaft & Rail	16.0	5.5	M5x20	5550.0	150.0	Steel
20268527	Shaft & Rail	16.0	5.5	M5x20	5700.0	150.0	Steel
20268534	Shaft & Rail	16.0	5.5	M5x20	5850.0	150.0	Steel
20268541	Shaft & Rail	16.0	5.5	M5x20	600.0	150.0	Steel
20268558	Shaft & Rail	20.0	6.6	M6x25	300.0	150.0	Steel
20268565	Shaft & Rail	20.0	6.6	M6x25	450.0	150.0	Steel
20268572	Shaft & Rail	20.0	6.6	M6x25	600.0	150.0	Steel
20268589	Shaft & Rail	20.0	6.6	M6x25	750.0	150.0	Steel
20268596	Shaft & Rail	20.0	6.6	M6x25	900.0	150.0	Steel
20268602	Shaft & Rail	20.0	6.6	M6x25	1050.0	150.0	Steel
20268619	Shaft & Rail	20.0	6.6	M6x25	1200.0	150.0	Steel
20268626	Shaft & Rail	20.0	6.6	M6x25	1350.0	150.0	Steel
20268633	Shaft & Rail	20.0	6.6	M6x25	1500.0	150.0	Steel
20268640	Shaft & Rail	20.0	6.6	M6x25	1650.0	150.0	Steel
20268657	Shaft & Rail	20.0	6.6	M6x25	1800.0	150.0	Steel
20268664	Shaft & Rail	20.0	6.6	M6x25	1950.0	150.0	Steel
20268671	Shaft & Rail	20.0	6.6	M6x25	2100.0	150.0	Steel
20268688	Shaft & Rail	20.0	6.6	M6x25	2250.0	150.0	Steel
20268695	Shaft & Rail	20.0	6.6	M6x25	240.0	150.0	Steel
20268701	Shaft & Rail	20.0	6.6	M6x25	2550.0	150.0	Steel
20268718	Shaft & Rail	20.0	6.6	M6x25	2700.0	150.0	Steel

Shaft Support Rails

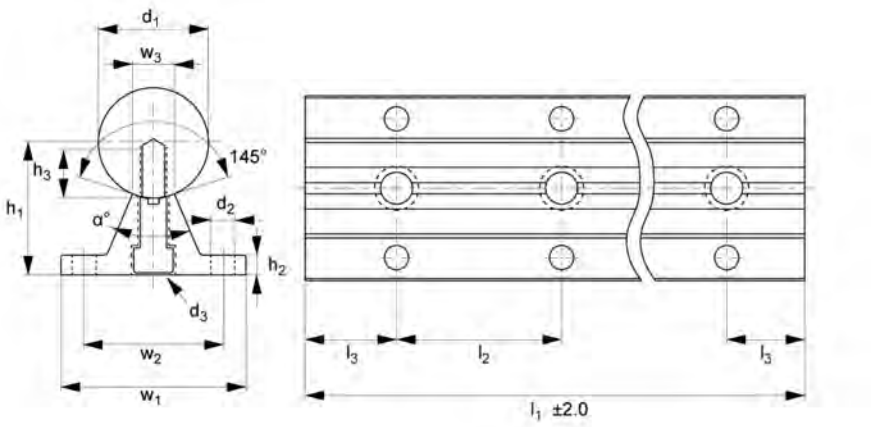



Part Number	Rail Type	d1 tol. h6	d2	d3	l1	l2	Material
20268725	Shaft & Rail	20.0	6.6	M6x25	2850.0	150.0	Steel
20268732	Shaft & Rail	20.0	6.6	M6x25	3000.0	150.0	Steel
20268749	Shaft & Rail	20.0	6.6	M6x25	3150.0	150.0	Steel
20268756	Shaft & Rail	20.0	6.6	M6x25	3300.0	150.0	Steel
20268763	Shaft & Rail	20.0	6.6	M6x25	3450.0	150.0	Steel
20268770	Shaft & Rail	20.0	6.6	M6x25	360.0	150.0	Steel
20268787	Shaft & Rail	20.0	6.6	M6x25	3750.0	150.0	Steel
20268794	Shaft & Rail	20.0	6.6	M6x25	3900.0	150.0	Steel
20270278	Shaft & Rail	20.0	6.6	M6x25	4000.0	150.0	Steel
20268800	Shaft & Rail	20.0	6.6	M6x25	4050.0	150.0	Steel
20268817	Shaft & Rail	20.0	6.6	M6x25	4200.0	150.0	Steel
20268824	Shaft & Rail	20.0	6.6	M6x25	4350.0	150.0	Steel
20268831	Shaft & Rail	20.0	6.6	M6x25	4500.0	150.0	Steel
20268848	Shaft & Rail	20.0	6.6	M6x25	4650.0	150.0	Steel
20268855	Shaft & Rail	20.0	6.6	M6x25	480.0	150.0	Steel
20268862	Shaft & Rail	20.0	6.6	M6x25	4940.0	150.0	Steel
20268879	Shaft & Rail	20.0	6.6	M6x25	5100.0	150.0	Steel
20268886	Shaft & Rail	20.0	6.6	M6x25	5250.0	150.0	Steel
20268893	Shaft & Rail	20.0	6.6	M6x25	5400.0	150.0	Steel
20268909	Shaft & Rail	20.0	6.6	M6x25	5550.0	150.0	Steel
20268916	Shaft & Rail	20.0	6.6	M6x25	5700.0	150.0	Steel

Shaft Support Rails

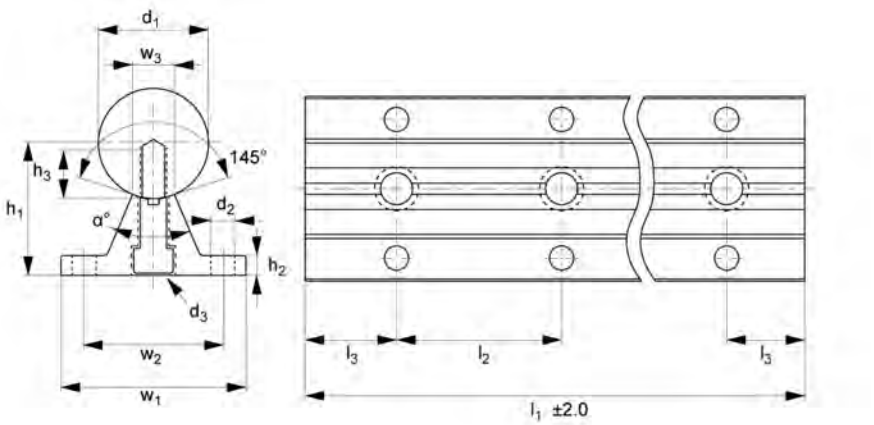



Part Number	Rail Type	d1 tol. h6	d2	d3	l1	l2	Material
20268923	Shaft & Rail	20.0	6.6	M6x25	5850.0	150.0	Steel
20268930	Shaft & Rail	20.0	6.6	M6x25	600.0	150.0	Steel
20268947	Shaft & Rail	25.0	6.6	M8x30	400.0	200.0	Steel
20268954	Shaft & Rail	25.0	6.6	M8x30	600.0	200.0	Steel
20268961	Shaft & Rail	25.0	6.6	M8x30	800.0	200.0	Steel
20268978	Shaft & Rail	25.0	6.6	M8x30	1000.0	200.0	Steel
20268985	Shaft & Rail	25.0	6.6	M8x30	1200.0	200.0	Steel
20268992	Shaft & Rail	25.0	6.6	M8x30	1400.0	200.0	Steel
20269005	Shaft & Rail	25.0	6.6	M8x30	1600.0	200.0	Steel
20269012	Shaft & Rail	25.0	6.6	M8x30	1800.0	200.0	Steel
20267667	Shaft & Rail	25.0	6.6	M8x30	2000.0	200.0	Steel
20269029	Shaft & Rail	25.0	6.6	M8x30	2200.0	200.0	Steel
20269036	Shaft & Rail	25.0	6.6	M8x30	240.0	200.0	Steel
20269043	Shaft & Rail	25.0	6.6	M8x30	2600.0	200.0	Steel
20269050	Shaft & Rail	25.0	6.6	M8x30	2800.0	200.0	Steel
20269067	Shaft & Rail	25.0	6.6	M8x30	3000.0	200.0	Steel
20269074	Shaft & Rail	25.0	6.6	M8x30	3200.0	200.0	Steel
20269081	Shaft & Rail	25.0	6.6	M8x30	3400.0	200.0	Steel
20267674	Shaft & Rail	25.0	6.6	M8x30	360.0	200.0	Steel
20269098	Shaft & Rail	25.0	6.6	M8x30	3800.0	200.0	Steel
20269104	Shaft & Rail	25.0	6.6	M8x30	4000.0	200.0	Steel

Shaft Support Rails

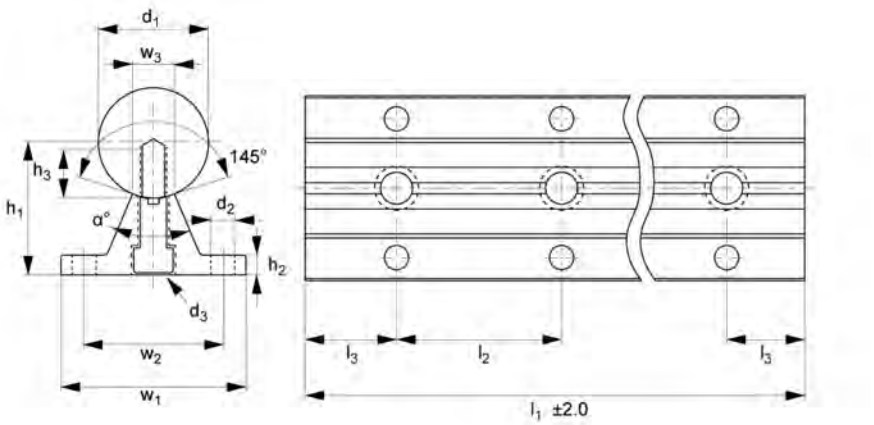



Part Number	Rail Type	d1 tol. h6	d2	d3	l1	l2	Material
20269111	Shaft & Rail	25.0	6.6	M8x30	4200.0	200.0	Steel
20269128	Shaft & Rail	25.0	6.6	M8x30	4400.0	200.0	Steel
20269135	Shaft & Rail	25.0	6.6	M8x30	4600.0	200.0	Steel
20269142	Shaft & Rail	25.0	6.6	M8x30	480.0	200.0	Steel
20269159	Shaft & Rail	25.0	6.6	M8x30	5000.0	200.0	Steel
20269166	Shaft & Rail	25.0	6.6	M8x30	5200.0	200.0	Steel
20269173	Shaft & Rail	25.0	6.6	M8x30	5400.0	200.0	Steel
20269180	Shaft & Rail	25.0	6.6	M8x30	5600.0	200.0	Steel
20269197	Shaft & Rail	25.0	6.6	M8x30	5800.0	200.0	Steel
20269203	Shaft & Rail	25.0	6.6	M8x30	600.0	200.0	Steel
20269210	Shaft & Rail	30.0	9.0	M10x35	400.0	200.0	Steel
20269227	Shaft & Rail	30.0	9.0	M10x35	600.0	200.0	Steel
20269234	Shaft & Rail	30.0	9.0	M10x35	800.0	200.0	Steel
20269241	Shaft & Rail	30.0	9.0	M10x35	1000.0	200.0	Steel
20269258	Shaft & Rail	30.0	9.0	M10x35	1200.0	200.0	Steel
20269265	Shaft & Rail	30.0	9.0	M10x35	1400.0	200.0	Steel
20269272	Shaft & Rail	30.0	9.0	M10x35	1600.0	200.0	Steel
20269289	Shaft & Rail	30.0	9.0	M10x35	1800.0	200.0	Steel
20269296	Shaft & Rail	30.0	9.0	M10x35	2000.0	200.0	Steel
20269302	Shaft & Rail	30.0	9.0	M10x35	2200.0	200.0	Steel
20269319	Shaft & Rail	30.0	9.0	M10x35	240.0	200.0	Steel

Shaft Support Rails

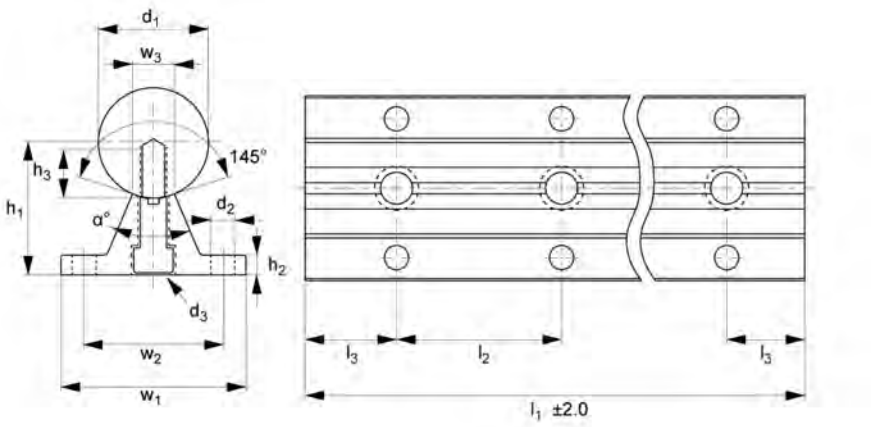



Part Number	Rail Type	d1 tol. h6	d2	d3	l1	l2	Material
20269326	Shaft & Rail	30.0	9.0	M10x35	2600.0	200.0	Steel
20269333	Shaft & Rail	30.0	9.0	M10x35	2800.0	200.0	Steel
20269340	Shaft & Rail	30.0	9.0	M10x35	3000.0	200.0	Steel
20269357	Shaft & Rail	30.0	9.0	M10x35	3200.0	200.0	Steel
20269364	Shaft & Rail	30.0	9.0	M10x35	3400.0	200.0	Steel
20269371	Shaft & Rail	30.0	9.0	M10x35	360.0	200.0	Steel
20269388	Shaft & Rail	30.0	9.0	M10x35	3800.0	200.0	Steel
20269395	Shaft & Rail	30.0	9.0	M10x35	4000.0	200.0	Steel
20269401	Shaft & Rail	30.0	9.0	M10x35	4200.0	200.0	Steel
20269418	Shaft & Rail	30.0	9.0	M10x35	4400.0	200.0	Steel
20269425	Shaft & Rail	30.0	9.0	M10x35	4600.0	200.0	Steel
20269432	Shaft & Rail	30.0	9.0	M10x35	480.0	200.0	Steel
20269449	Shaft & Rail	30.0	9.0	M10x35	5000.0	200.0	Steel
20269456	Shaft & Rail	30.0	9.0	M10x35	5200.0	200.0	Steel
20269463	Shaft & Rail	30.0	9.0	M10x35	5400.0	200.0	Steel
20269470	Shaft & Rail	30.0	9.0	M10x35	5600.0	200.0	Steel
20269487	Shaft & Rail	30.0	9.0	M10x35	5800.0	200.0	Steel
20269494	Shaft & Rail	30.0	9.0	M10x35	600.0	200.0	Steel
20269500	Shaft & Rail	40.0	9.0	M10x40	600.0	300.0	Steel
20269517	Shaft & Rail	40.0	9.0	M10x40	900.0	300.0	Steel
20269524	Shaft & Rail	40.0	9.0	M10x40	1200.0	300.0	Steel

Shaft Support Rails

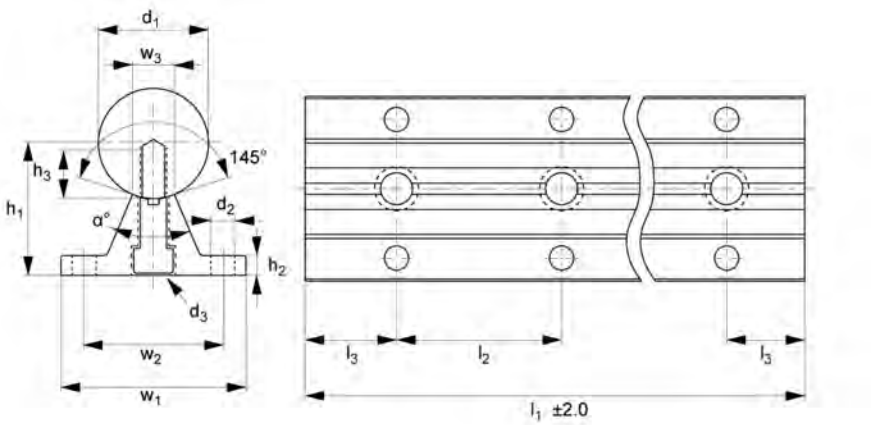



Part Number	Rail Type	d1 tol. h6	d2	d3	l1	l2	Material
20269531	Shaft & Rail	40.0	9.0	M10x40	1500.0	300.0	Steel
20269548	Shaft & Rail	40.0	9.0	M10x40	1800.0	300.0	Steel
20269555	Shaft & Rail	40.0	9.0	M10x40	2100.0	300.0	Steel
20269562	Shaft & Rail	40.0	9.0	M10x40	240.0	300.0	Steel
20269579	Shaft & Rail	40.0	9.0	M10x40	2700.0	300.0	Steel
20269586	Shaft & Rail	40.0	9.0	M10x40	3000.0	300.0	Steel
20269593	Shaft & Rail	40.0	9.0	M10x40	3300.0	300.0	Steel
20269609	Shaft & Rail	40.0	9.0	M10x40	360.0	300.0	Steel
20269616	Shaft & Rail	40.0	9.0	M10x40	3900.0	300.0	Steel
20269623	Shaft & Rail	40.0	9.0	M10x40	4200.0	300.0	Steel
20269630	Shaft & Rail	40.0	9.0	M10x40	4500.0	300.0	Steel
20269647	Shaft & Rail	40.0	9.0	M10x40	480.0	300.0	Steel
20269654	Shaft & Rail	40.0	9.0	M10x40	5100.0	300.0	Steel
20269661	Shaft & Rail	40.0	9.0	M10x40	5400.0	300.0	Steel
20269678	Shaft & Rail	40.0	9.0	M10x40	5700.0	300.0	Steel
20269685	Shaft & Rail	40.0	9.0	M10x40	600.0	300.0	Steel
20269692	Shaft & Rail	50.0	11.0	M12x45	600.0	300.0	Steel
20269708	Shaft & Rail	50.0	11.0	M12x45	900.0	300.0	Steel
20269715	Shaft & Rail	50.0	11.0	M12x45	1200.0	300.0	Steel
20269722	Shaft & Rail	50.0	11.0	M12x45	1500.0	300.0	Steel
20269739	Shaft & Rail	50.0	11.0	M12x45	1800.0	300.0	Steel

Shaft Support Rails

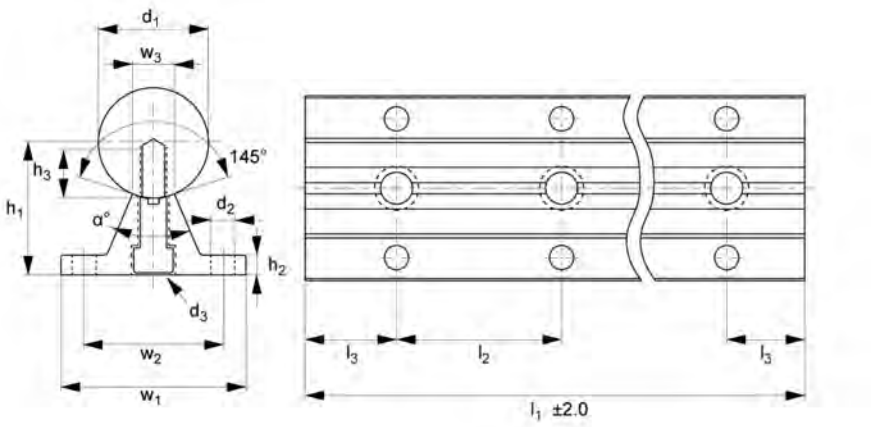



Part Number	Rail Type	d1 tol. h6	d2	d3	l1	l2	Material
20269746	Shaft & Rail	50.0	11.0	M12x45	2100.0	300.0	Steel
20269753	Shaft & Rail	50.0	11.0	M12x45	240.0	300.0	Steel
20269760	Shaft & Rail	50.0	11.0	M12x45	2700.0	300.0	Steel
20269777	Shaft & Rail	50.0	11.0	M12x45	3000.0	300.0	Steel
20269784	Shaft & Rail	50.0	11.0	M12x45	3300.0	300.0	Steel
20269791	Shaft & Rail	50.0	11.0	M12x45	360.0	300.0	Steel
20269807	Shaft & Rail	50.0	11.0	M12x45	3900.0	300.0	Steel
20269814	Shaft & Rail	50.0	11.0	M12x45	4200.0	300.0	Steel
20269821	Shaft & Rail	50.0	11.0	M12x45	4500.0	300.0	Steel
20269838	Shaft & Rail	50.0	11.0	M12x45	480.0	300.0	Steel
20269845	Shaft & Rail	50.0	11.0	M12x45	5100.0	300.0	Steel
20269852	Shaft & Rail	50.0	11.0	M12x45	5400.0	300.0	Steel
20269869	Shaft & Rail	50.0	11.0	M12x45	5700.0	300.0	Steel
20269876	Shaft & Rail	50.0	11.0	M12x45	600.0	300.0	Steel
20269883	Shaft & Rail	60.0	11.0	M14x50	600.0	300.0	Steel
20269890	Shaft & Rail	60.0	11.0	M14x50	900.0	300.0	Steel
20269906	Shaft & Rail	60.0	11.0	M14x50	1200.0	300.0	Steel
20269913	Shaft & Rail	60.0	11.0	M14x50	1500.0	300.0	Steel
20269920	Shaft & Rail	60.0	11.0	M14x50	1800.0	300.0	Steel
20269937	Shaft & Rail	60.0	11.0	M14x50	2100.0	300.0	Steel
20269944	Shaft & Rail	60.0	11.0	M14x50	240.0	300.0	Steel

Shaft Support Rails

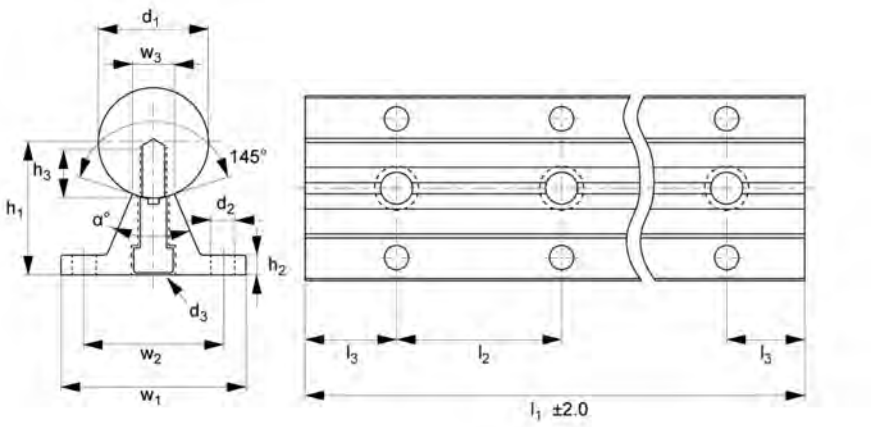



Part Number	Rail Type	d1 tol. h6	d2	d3	l1	l2	Material
20269951	Shaft & Rail	60.0	11.0	M14x50	2700.0	300.0	Steel
20269968	Shaft & Rail	60.0	11.0	M14x50	3000.0	300.0	Steel
20269975	Shaft & Rail	60.0	11.0	M14x50	3300.0	300.0	Steel
20269982	Shaft & Rail	60.0	11.0	M14x50	360.0	300.0	Steel
20269999	Shaft & Rail	60.0	11.0	M14x50	3900.0	300.0	Steel
20270001	Shaft & Rail	60.0	11.0	M14x50	4200.0	300.0	Steel
20270018	Shaft & Rail	60.0	11.0	M14x50	4500.0	300.0	Steel
20270025	Shaft & Rail	60.0	11.0	M14x50	480.0	300.0	Steel
20270032	Shaft & Rail	60.0	11.0	M14x50	5100.0	300.0	Steel
20270049	Shaft & Rail	60.0	11.0	M14x50	5400.0	300.0	Steel
20270056	Shaft & Rail	60.0	11.0	M14x50	5700.0	300.0	Steel
20270063	Shaft & Rail	60.0	11.0	M14x50	600.0	300.0	Steel
20270070	Shaft & Rail	80.0	13.5	M16x60	600.0	300.0	Steel
20270087	Shaft & Rail	80.0	13.5	M16x60	900.0	300.0	Steel
20270094	Shaft & Rail	80.0	13.5	M16x60	1200.0	300.0	Steel
20270100	Shaft & Rail	80.0	13.5	M16x60	1500.0	300.0	Steel
20270117	Shaft & Rail	80.0	13.5	M16x60	1800.0	300.0	Steel
20270124	Shaft & Rail	80.0	13.5	M16x60	2100.0	300.0	Steel
20270131	Shaft & Rail	80.0	13.5	M16x60	240.0	300.0	Steel
20270148	Shaft & Rail	80.0	13.5	M16x60	2700.0	300.0	Steel
20270155	Shaft & Rail	80.0	13.5	M16x60	3000.0	300.0	Steel

Shaft Support Rails

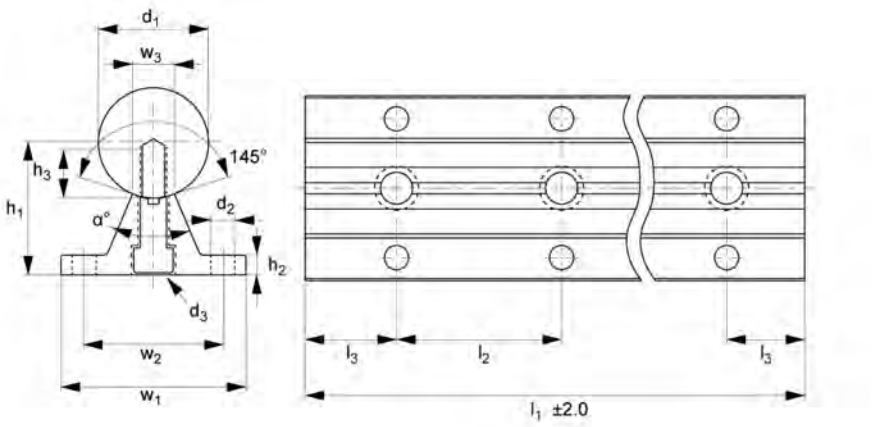



Part Number	Rail Type	d1 tol. h6	d2	d3	l1	l2	Material
20270162	Shaft & Rail	80.0	13.5	M16x60	3300.0	300.0	Steel
20270179	Shaft & Rail	80.0	13.5	M16x60	360.0	300.0	Steel
20270186	Shaft & Rail	80.0	13.5	M16x60	3900.0	300.0	Steel
20270193	Shaft & Rail	80.0	13.5	M16x60	4200.0	300.0	Steel
20270209	Shaft & Rail	80.0	13.5	M16x60	4500.0	300.0	Steel
20270216	Shaft & Rail	80.0	13.5	M16x60	480.0	300.0	Steel
20270223	Shaft & Rail	80.0	13.5	M16x60	5100.0	300.0	Steel
20270230	Shaft & Rail	80.0	13.5	M16x60	5400.0	300.0	Steel
20270247	Shaft & Rail	80.0	13.5	M16x60	5700.0	300.0	Steel
20270254	Shaft & Rail	80.0	13.5	M16x60	600.0	300.0	Steel
20270292	Shaft & Rail	12.0	4.5	M4x20	240.0	120.0	Stainless Steel
20270308	Shaft & Rail	12.0	4.5	M4x20	360.0	120.0	Stainless Steel
20270315	Shaft & Rail	12.0	4.5	M4x20	480.0	120.0	Stainless Steel
20270322	Shaft & Rail	12.0	4.5	M4x20	600.0	120.0	Stainless Steel
20270339	Shaft & Rail	12.0	4.5	M4x20	720.0	120.0	Stainless Steel
20270346	Shaft & Rail	12.0	4.5	M4x20	840.0	120.0	Stainless Steel
20270353	Shaft & Rail	12.0	4.5	M4x20	960.0	120.0	Stainless Steel
20270360	Shaft & Rail	12.0	4.5	M4x20	1080.0	120.0	Stainless Steel
20270377	Shaft & Rail	12.0	4.5	M4x20	1200.0	120.0	Stainless Steel
20270384	Shaft & Rail	12.0	4.5	M4x20	1320.0	120.0	Stainless Steel
20270391	Shaft & Rail	12.0	4.5	M4x20	1440.0	120.0	Stainless Steel

Shaft Support Rails

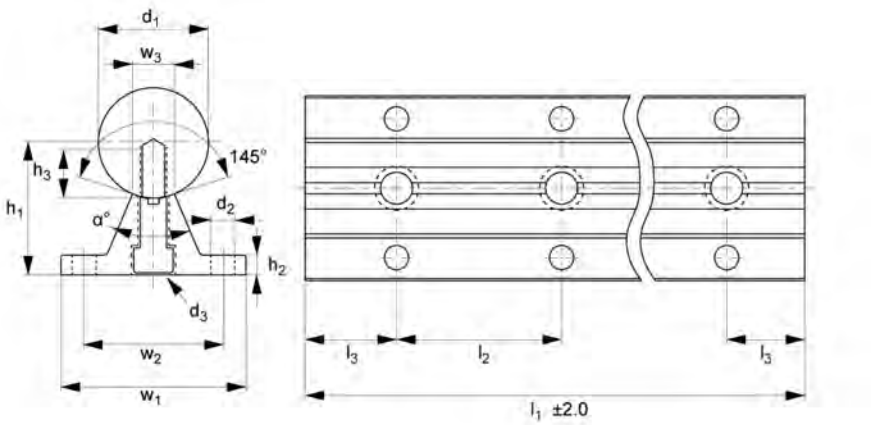



Part Number	Rail Type	d1 tol. h6	d2	d3	l1	l2	Material
20270407	Shaft & Rail	12.0	4.5	M4x20	1560.0	120.0	Stainless Steel
20270414	Shaft & Rail	12.0	4.5	M4x20	1680.0	120.0	Stainless Steel
20270421	Shaft & Rail	12.0	4.5	M4x20	1800.0	120.0	Stainless Steel
20270438	Shaft & Rail	12.0	4.5	M4x20	1920.0	120.0	Stainless Steel
20270445	Shaft & Rail	12.0	4.5	M4x20	2040.0	120.0	Stainless Steel
20270452	Shaft & Rail	12.0	4.5	M4x20	2160.0	120.0	Stainless Steel
20270469	Shaft & Rail	12.0	4.5	M4x20	2280.0	120.0	Stainless Steel
20270476	Shaft & Rail	12.0	4.5	M4x20	240.0	120.0	Stainless Steel
20270483	Shaft & Rail	12.0	4.5	M4x20	2520.0	120.0	Stainless Steel
20270490	Shaft & Rail	12.0	4.5	M4x20	2640.0	120.0	Stainless Steel
20270506	Shaft & Rail	12.0	4.5	M4x20	2760.0	120.0	Stainless Steel
20270513	Shaft & Rail	12.0	4.5	M4x20	2880.0	120.0	Stainless Steel
20270520	Shaft & Rail	12.0	4.5	M4x20	3000.0	120.0	Stainless Steel
20270537	Shaft & Rail	12.0	4.5	M4x20	3120.0	120.0	Stainless Steel
20270544	Shaft & Rail	12.0	4.5	M4x20	3240.0	120.0	Stainless Steel
20270551	Shaft & Rail	12.0	4.5	M4x20	3360.0	120.0	Stainless Steel
20270568	Shaft & Rail	12.0	4.5	M4x20	3480.0	120.0	Stainless Steel
20270575	Shaft & Rail	12.0	4.5	M4x20	360.0	120.0	Stainless Steel
20270582	Shaft & Rail	12.0	4.5	M4x20	3720.0	120.0	Stainless Steel
20270599	Shaft & Rail	12.0	4.5	M4x20	3840.0	120.0	Stainless Steel
20270605	Shaft & Rail	12.0	4.5	M4x20	3960.0	120.0	Stainless Steel

Shaft Support Rails

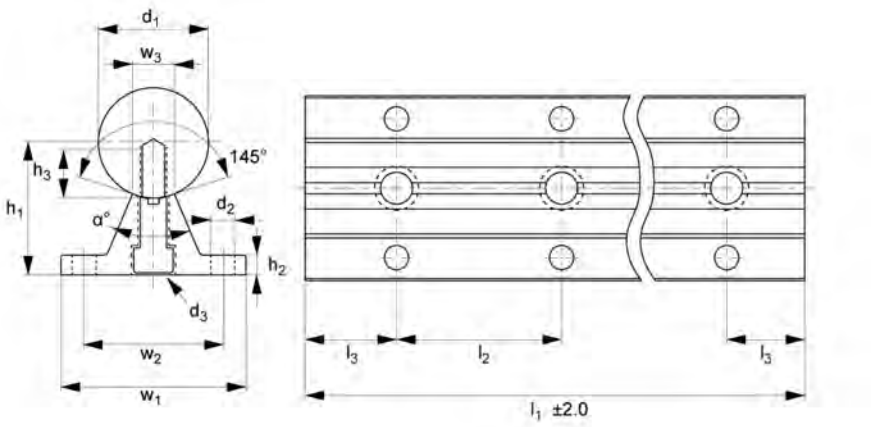



Part Number	Rail Type	d1 tol. h6	d2	d3	l1	l2	Material
20270612	Shaft & Rail	12.0	4.5	M4x20	4080.0	120.0	Stainless Steel
20270629	Shaft & Rail	12.0	4.5	M4x20	4200.0	120.0	Stainless Steel
20270636	Shaft & Rail	12.0	4.5	M4x20	4320.0	120.0	Stainless Steel
20270643	Shaft & Rail	12.0	4.5	M4x20	4440.0	120.0	Stainless Steel
20270650	Shaft & Rail	12.0	4.5	M4x20	4560.0	120.0	Stainless Steel
20270667	Shaft & Rail	12.0	4.5	M4x20	4680.0	120.0	Stainless Steel
20270674	Shaft & Rail	12.0	4.5	M4x20	480.0	120.0	Stainless Steel
20270681	Shaft & Rail	12.0	4.5	M4x20	4920.0	120.0	Stainless Steel
20270698	Shaft & Rail	12.0	4.5	M4x20	5040.0	120.0	Stainless Steel
20270704	Shaft & Rail	12.0	4.5	M4x20	5150.0	120.0	Stainless Steel
20270711	Shaft & Rail	12.0	4.5	M4x20	5280.0	120.0	Stainless Steel
20270728	Shaft & Rail	12.0	4.5	M4x20	5400.0	120.0	Stainless Steel
20270735	Shaft & Rail	12.0	4.5	M4x20	5520.0	120.0	Stainless Steel
20270742	Shaft & Rail	12.0	4.5	M4x20	5640.0	120.0	Stainless Steel
20270759	Shaft & Rail	12.0	4.5	M4x20	5760.0	120.0	Stainless Steel
20270766	Shaft & Rail	12.0	4.5	M4x20	5880.0	120.0	Stainless Steel
20270773	Shaft & Rail	12.0	4.5	M4x20	600.0	120.0	Stainless Steel
20270780	Shaft & Rail	16.0	5.5	M5x20	300.0	150.0	Stainless Steel
20270797	Shaft & Rail	16.0	5.5	M5x20	450.0	150.0	Stainless Steel
20270803	Shaft & Rail	16.0	5.5	M5x20	600.0	150.0	Stainless Steel
20270810	Shaft & Rail	16.0	5.5	M5x20	750.0	150.0	Stainless Steel

Shaft Support Rails

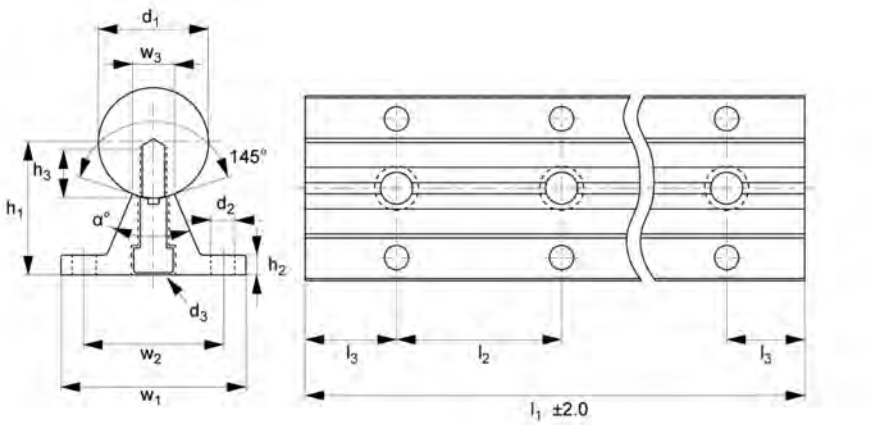



Part Number	Rail Type	d1 tol. h6	d2	d3	l1	l2	Material
20270827	Shaft & Rail	16.0	5.5	M5x20	900.0	150.0	Stainless Steel
20270834	Shaft & Rail	16.0	5.5	M5x20	1050.0	150.0	Stainless Steel
20270841	Shaft & Rail	16.0	5.5	M5x20	1200.0	150.0	Stainless Steel
20270858	Shaft & Rail	16.0	5.5	M5x20	1350.0	150.0	Stainless Steel
20270865	Shaft & Rail	16.0	5.5	M5x20	1500.0	150.0	Stainless Steel
20270872	Shaft & Rail	16.0	5.5	M5x20	1650.0	150.0	Stainless Steel
20270889	Shaft & Rail	16.0	5.5	M5x20	1800.0	150.0	Stainless Steel
20270896	Shaft & Rail	16.0	5.5	M5x20	1950.0	150.0	Stainless Steel
20270902	Shaft & Rail	16.0	5.5	M5x20	2100.0	150.0	Stainless Steel
20270919	Shaft & Rail	16.0	5.5	M5x20	2250.0	150.0	Stainless Steel
20270926	Shaft & Rail	16.0	5.5	M5x20	240.0	150.0	Stainless Steel
20270933	Shaft & Rail	16.0	5.5	M5x20	2550.0	150.0	Stainless Steel
20270940	Shaft & Rail	16.0	5.5	M5x20	2700.0	150.0	Stainless Steel
20270957	Shaft & Rail	16.0	5.5	M5x20	2850.0	150.0	Stainless Steel
20270964	Shaft & Rail	16.0	5.5	M5x20	3000.0	150.0	Stainless Steel
20270971	Shaft & Rail	16.0	5.5	M5x20	3150.0	150.0	Stainless Steel
20270988	Shaft & Rail	16.0	5.5	M5x20	3300.0	150.0	Stainless Steel
20270995	Shaft & Rail	16.0	5.5	M5x20	3450.0	150.0	Stainless Steel
20271008	Shaft & Rail	16.0	5.5	M5x20	360.0	150.0	Stainless Steel
20271015	Shaft & Rail	16.0	5.5	M5x20	3750.0	150.0	Stainless Steel
20271022	Shaft & Rail	16.0	5.5	M5x20	3900.0	150.0	Stainless Steel

Shaft Support Rails

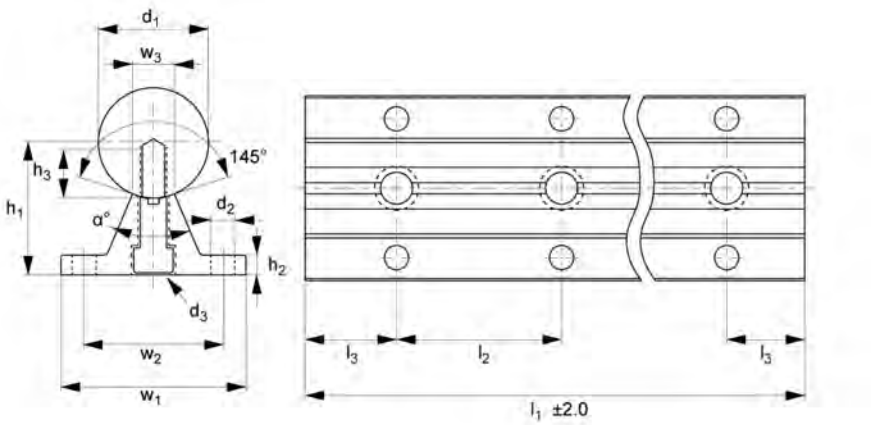



Part Number	Rail Type	d1 tol. h6	d2	d3	l1	l2	Material
20271039	Shaft & Rail	16.0	5.5	M5x20	4050.0	150.0	Stainless Steel
20271046	Shaft & Rail	16.0	5.5	M5x20	4200.0	150.0	Stainless Steel
20271053	Shaft & Rail	16.0	5.5	M5x20	4350.0	150.0	Stainless Steel
20271060	Shaft & Rail	16.0	5.5	M5x20	4500.0	150.0	Stainless Steel
20271077	Shaft & Rail	16.0	5.5	M5x20	4650.0	150.0	Stainless Steel
20271084	Shaft & Rail	16.0	5.5	M5x20	480.0	150.0	Stainless Steel
20271091	Shaft & Rail	16.0	5.5	M5x20	4950.0	150.0	Stainless Steel
20271107	Shaft & Rail	16.0	5.5	M5x20	5100.0	150.0	Stainless Steel
20271114	Shaft & Rail	16.0	5.5	M5x20	5250.0	150.0	Stainless Steel
20271121	Shaft & Rail	16.0	5.5	M5x20	5400.0	150.0	Stainless Steel
20271138	Shaft & Rail	16.0	5.5	M5x20	5550.0	150.0	Stainless Steel
20271145	Shaft & Rail	16.0	5.5	M5x20	5700.0	150.0	Stainless Steel
20271152	Shaft & Rail	16.0	5.5	M5x20	5850.0	150.0	Stainless Steel
20271169	Shaft & Rail	16.0	5.5	M5x20	600.0	150.0	Stainless Steel
20271176	Shaft & Rail	20.0	6.6	M6x25	300.0	150.0	Stainless Steel
20271183	Shaft & Rail	20.0	6.6	M6x25	450.0	150.0	Stainless Steel
20271190	Shaft & Rail	20.0	6.6	M6x25	600.0	150.0	Stainless Steel
20271206	Shaft & Rail	20.0	6.6	M6x25	750.0	150.0	Stainless Steel
20271213	Shaft & Rail	20.0	6.6	M6x25	900.0	150.0	Stainless Steel
20271220	Shaft & Rail	20.0	6.6	M6x25	1050.0	150.0	Stainless Steel
20271237	Shaft & Rail	20.0	6.6	M6x25	1200.0	150.0	Stainless Steel

Shaft Support Rails

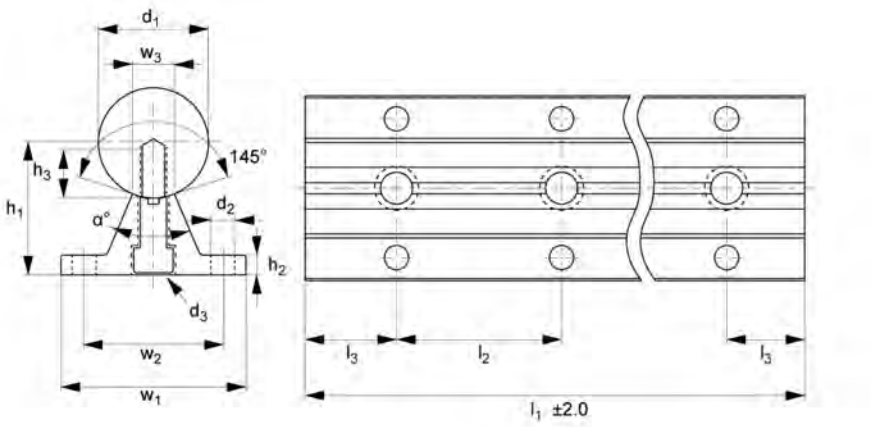



Part Number	Rail Type	d1 tol. h6	d2	d3	l1	l2	Material
20271244	Shaft & Rail	20.0	6.6	M6x25	1350.0	150.0	Stainless Steel
20271251	Shaft & Rail	20.0	6.6	M6x25	1500.0	150.0	Stainless Steel
20271268	Shaft & Rail	20.0	6.6	M6x25	1650.0	150.0	Stainless Steel
20271275	Shaft & Rail	20.0	6.6	M6x25	1800.0	150.0	Stainless Steel
20271282	Shaft & Rail	20.0	6.6	M6x25	1950.0	150.0	Stainless Steel
20271299	Shaft & Rail	20.0	6.6	M6x25	2100.0	150.0	Stainless Steel
20271305	Shaft & Rail	20.0	6.6	M6x25	2250.0	150.0	Stainless Steel
20271312	Shaft & Rail	20.0	6.6	M6x25	240.0	150.0	Stainless Steel
20271329	Shaft & Rail	20.0	6.6	M6x25	2550.0	150.0	Stainless Steel
20271336	Shaft & Rail	20.0	6.6	M6x25	2700.0	150.0	Stainless Steel
20271343	Shaft & Rail	20.0	6.6	M6x25	2850.0	150.0	Stainless Steel
20271350	Shaft & Rail	20.0	6.6	M6x25	3000.0	150.0	Stainless Steel
20271367	Shaft & Rail	20.0	6.6	M6x25	3150.0	150.0	Stainless Steel
20271374	Shaft & Rail	20.0	6.6	M6x25	3300.0	150.0	Stainless Steel
20271381	Shaft & Rail	20.0	6.6	M6x25	3450.0	150.0	Stainless Steel
20271398	Shaft & Rail	20.0	6.6	M6x25	360.0	150.0	Stainless Steel
20271404	Shaft & Rail	20.0	6.6	M6x25	3750.0	150.0	Stainless Steel
20271411	Shaft & Rail	20.0	6.6	M6x25	3900.0	150.0	Stainless Steel
20271428	Shaft & Rail	20.0	6.6	M6x25	4000.0	150.0	Stainless Steel
20271435	Shaft & Rail	20.0	6.6	M6x25	4050.0	150.0	Stainless Steel
20271442	Shaft & Rail	20.0	6.6	M6x25	4200.0	150.0	Stainless Steel

Shaft Support Rails

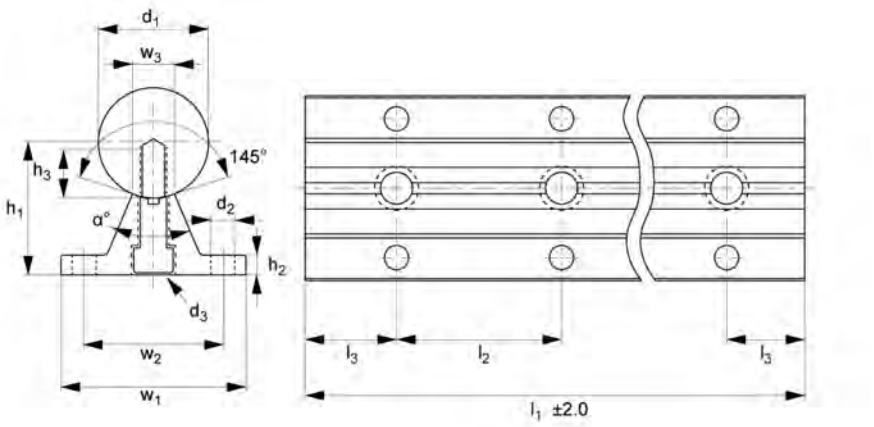



Part Number	Rail Type	d1 tol. h6	d2	d3	l1	l2	Material
20271459	Shaft & Rail	20.0	6.6	M6x25	4350.0	150.0	Stainless Steel
20271466	Shaft & Rail	20.0	6.6	M6x25	4500.0	150.0	Stainless Steel
20271473	Shaft & Rail	20.0	6.6	M6x25	4650.0	150.0	Stainless Steel
20271480	Shaft & Rail	20.0	6.6	M6x25	480.0	150.0	Stainless Steel
20271497	Shaft & Rail	20.0	6.6	M6x25	4940.0	150.0	Stainless Steel
20271503	Shaft & Rail	20.0	6.6	M6x25	5100.0	150.0	Stainless Steel
20271510	Shaft & Rail	20.0	6.6	M6x25	5250.0	150.0	Stainless Steel
20271527	Shaft & Rail	20.0	6.6	M6x25	5400.0	150.0	Stainless Steel
20271534	Shaft & Rail	20.0	6.6	M6x25	5550.0	150.0	Stainless Steel
20271541	Shaft & Rail	20.0	6.6	M6x25	5700.0	150.0	Stainless Steel
20271558	Shaft & Rail	20.0	6.6	M6x25	5850.0	150.0	Stainless Steel
20271565	Shaft & Rail	20.0	6.6	M6x25	600.0	150.0	Stainless Steel
20271572	Shaft & Rail	25.0	6.6	M8x30	400.0	200.0	Stainless Steel
20271589	Shaft & Rail	25.0	6.6	M8x30	600.0	200.0	Stainless Steel
20271596	Shaft & Rail	25.0	6.6	M8x30	800.0	200.0	Stainless Steel
20271602	Shaft & Rail	25.0	6.6	M8x30	1000.0	200.0	Stainless Steel
20271619	Shaft & Rail	25.0	6.6	M8x30	1200.0	200.0	Stainless Steel
20271626	Shaft & Rail	25.0	6.6	M8x30	1400.0	200.0	Stainless Steel
20271633	Shaft & Rail	25.0	6.6	M8x30	1600.0	200.0	Stainless Steel
20271640	Shaft & Rail	25.0	6.6	M8x30	1800.0	200.0	Stainless Steel
20271657	Shaft & Rail	25.0	6.6	M8x30	2000.0	200.0	Stainless Steel

Shaft Support Rails

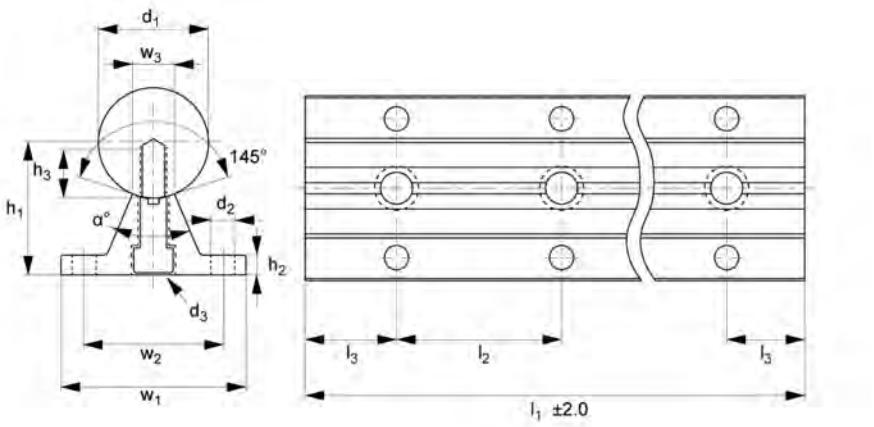



Part Number	Rail Type	d1 tol. h6	d2	d3	l1	l2	Material
20270285	Shaft & Rail	25.0	6.6	M8x30	2200.0	200.0	Stainless Steel
20271664	Shaft & Rail	25.0	6.6	M8x30	240.0	200.0	Stainless Steel
20271671	Shaft & Rail	25.0	6.6	M8x30	2600.0	200.0	Stainless Steel
20271688	Shaft & Rail	25.0	6.6	M8x30	2800.0	200.0	Stainless Steel
20271695	Shaft & Rail	25.0	6.6	M8x30	3000.0	200.0	Stainless Steel
20271701	Shaft & Rail	25.0	6.6	M8x30	3200.0	200.0	Stainless Steel
20271718	Shaft & Rail	25.0	6.6	M8x30	3400.0	200.0	Stainless Steel
20271725	Shaft & Rail	25.0	6.6	M8x30	360.0	200.0	Stainless Steel
20271732	Shaft & Rail	25.0	6.6	M8x30	3800.0	200.0	Stainless Steel
20271749	Shaft & Rail	25.0	6.6	M8x30	4000.0	200.0	Stainless Steel
20271756	Shaft & Rail	25.0	6.6	M8x30	4200.0	200.0	Stainless Steel
20271763	Shaft & Rail	25.0	6.6	M8x30	4400.0	200.0	Stainless Steel
20271770	Shaft & Rail	25.0	6.6	M8x30	4600.0	200.0	Stainless Steel
20271787	Shaft & Rail	25.0	6.6	M8x30	480.0	200.0	Stainless Steel
20271794	Shaft & Rail	25.0	6.6	M8x30	5000.0	200.0	Stainless Steel
20271800	Shaft & Rail	25.0	6.6	M8x30	5200.0	200.0	Stainless Steel
20271817	Shaft & Rail	25.0	6.6	M8x30	5400.0	200.0	Stainless Steel
20271824	Shaft & Rail	25.0	6.6	M8x30	5600.0	200.0	Stainless Steel
20271831	Shaft & Rail	25.0	6.6	M8x30	5800.0	200.0	Stainless Steel
20271848	Shaft & Rail	25.0	6.6	M8x30	600.0	200.0	Stainless Steel
20271855	Shaft & Rail	30.0	9.0	M10x35	400.0	200.0	Stainless Steel

Shaft Support Rails

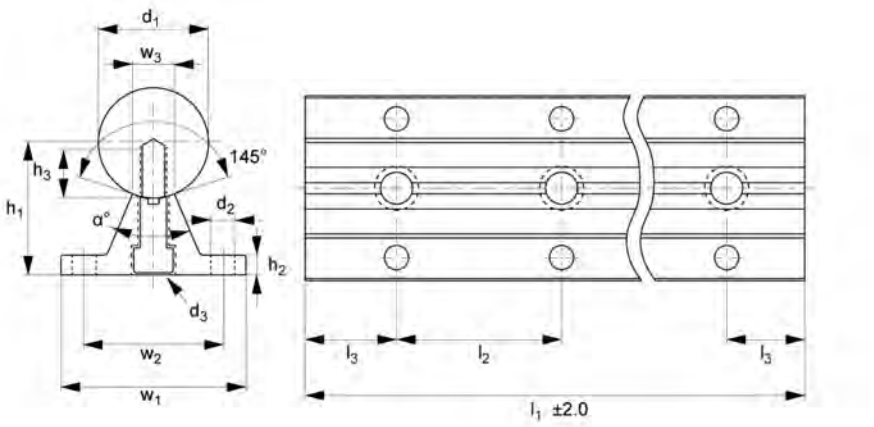



Part Number	Rail Type	d1 tol. h6	d2	d3	l1	l2	Material
20271862	Shaft & Rail	30.0	9.0	M10x35	600.0	200.0	Stainless Steel
20271879	Shaft & Rail	30.0	9.0	M10x35	800.0	200.0	Stainless Steel
20271886	Shaft & Rail	30.0	9.0	M10x35	1000.0	200.0	Stainless Steel
20271893	Shaft & Rail	30.0	9.0	M10x35	1200.0	200.0	Stainless Steel
20271909	Shaft & Rail	30.0	9.0	M10x35	1400.0	200.0	Stainless Steel
20271916	Shaft & Rail	30.0	9.0	M10x35	1600.0	200.0	Stainless Steel
20271923	Shaft & Rail	30.0	9.0	M10x35	1800.0	200.0	Stainless Steel
20271930	Shaft & Rail	30.0	9.0	M10x35	2000.0	200.0	Stainless Steel
20271947	Shaft & Rail	30.0	9.0	M10x35	2200.0	200.0	Stainless Steel
20271954	Shaft & Rail	30.0	9.0	M10x35	240.0	200.0	Stainless Steel
20271961	Shaft & Rail	30.0	9.0	M10x35	2600.0	200.0	Stainless Steel
20271978	Shaft & Rail	30.0	9.0	M10x35	2800.0	200.0	Stainless Steel
20271985	Shaft & Rail	30.0	9.0	M10x35	3000.0	200.0	Stainless Steel
20271992	Shaft & Rail	30.0	9.0	M10x35	3200.0	200.0	Stainless Steel
20272005	Shaft & Rail	30.0	9.0	M10x35	3400.0	200.0	Stainless Steel
20272012	Shaft & Rail	30.0	9.0	M10x35	360.0	200.0	Stainless Steel
20272029	Shaft & Rail	30.0	9.0	M10x35	3800.0	200.0	Stainless Steel
20272036	Shaft & Rail	30.0	9.0	M10x35	4000.0	200.0	Stainless Steel
20272043	Shaft & Rail	30.0	9.0	M10x35	4200.0	200.0	Stainless Steel
20272050	Shaft & Rail	30.0	9.0	M10x35	4400.0	200.0	Stainless Steel
20272067	Shaft & Rail	30.0	9.0	M10x35	4600.0	200.0	Stainless Steel

Shaft Support Rails

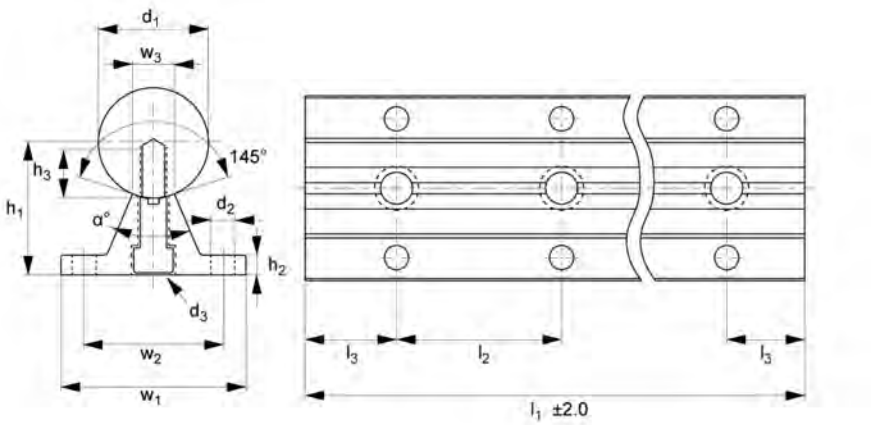



Part Number	Rail Type	d1 tol. h6	d2	d3	l1	l2	Material
20272074	Shaft & Rail	30.0	9.0	M10x35	480.0	200.0	Stainless Steel
20272081	Shaft & Rail	30.0	9.0	M10x35	5000.0	200.0	Stainless Steel
20272098	Shaft & Rail	30.0	9.0	M10x35	5200.0	200.0	Stainless Steel
20272104	Shaft & Rail	30.0	9.0	M10x35	5400.0	200.0	Stainless Steel
20272111	Shaft & Rail	30.0	9.0	M10x35	5600.0	200.0	Stainless Steel
20272128	Shaft & Rail	30.0	9.0	M10x35	5800.0	200.0	Stainless Steel
20272135	Shaft & Rail	30.0	9.0	M10x35	600.0	200.0	Stainless Steel
20272142	Shaft & Rail	40.0	9.0	M10x40	600.0	300.0	Stainless Steel
20272159	Shaft & Rail	40.0	9.0	M10x40	900.0	300.0	Stainless Steel
20272166	Shaft & Rail	40.0	9.0	M10x40	1200.0	300.0	Stainless Steel
20272173	Shaft & Rail	40.0	9.0	M10x40	1500.0	300.0	Stainless Steel
20272180	Shaft & Rail	40.0	9.0	M10x40	1800.0	300.0	Stainless Steel
20272197	Shaft & Rail	40.0	9.0	M10x40	2100.0	300.0	Stainless Steel
20272203	Shaft & Rail	40.0	9.0	M10x40	240.0	300.0	Stainless Steel
20272210	Shaft & Rail	40.0	9.0	M10x40	2700.0	300.0	Stainless Steel
20272227	Shaft & Rail	40.0	9.0	M10x40	3000.0	300.0	Stainless Steel
20272234	Shaft & Rail	40.0	9.0	M10x40	3300.0	300.0	Stainless Steel
20272241	Shaft & Rail	40.0	9.0	M10x40	360.0	300.0	Stainless Steel
20272258	Shaft & Rail	40.0	9.0	M10x40	3900.0	300.0	Stainless Steel
20272265	Shaft & Rail	40.0	9.0	M10x40	4200.0	300.0	Stainless Steel
20272272	Shaft & Rail	40.0	9.0	M10x40	4500.0	300.0	Stainless Steel

Shaft Support Rails

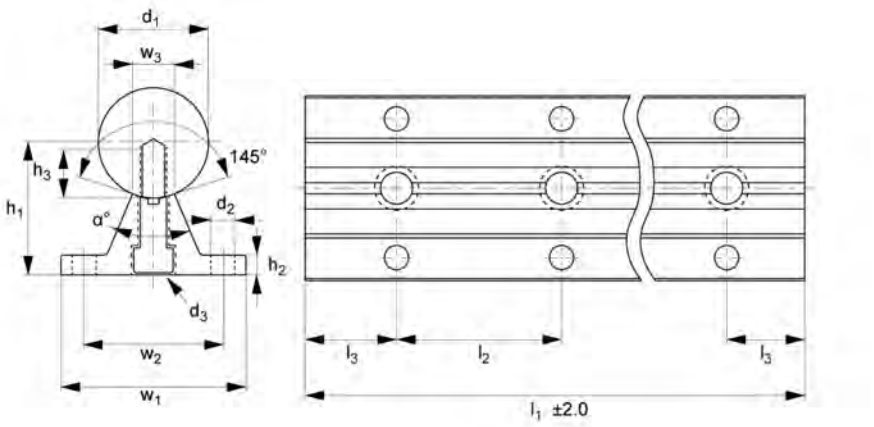



Part Number	Rail Type	d1 tol. h6	d2	d3	l1	l2	Material
20272289	Shaft & Rail	40.0	9.0	M10x40	480.0	300.0	Stainless Steel
20272296	Shaft & Rail	40.0	9.0	M10x40	5100.0	300.0	Stainless Steel
20272302	Shaft & Rail	40.0	9.0	M10x40	5400.0	300.0	Stainless Steel
20272319	Shaft & Rail	40.0	9.0	M10x40	5700.0	300.0	Stainless Steel
20272326	Shaft & Rail	40.0	9.0	M10x40	600.0	300.0	Stainless Steel
20272333	Shaft & Rail	50.0	11.0	M12x45	600.0	300.0	Stainless Steel
20272340	Shaft & Rail	50.0	11.0	M12x45	900.0	300.0	Stainless Steel
20272357	Shaft & Rail	50.0	11.0	M12x45	1200.0	300.0	Stainless Steel
20272364	Shaft & Rail	50.0	11.0	M12x45	1500.0	300.0	Stainless Steel
20272371	Shaft & Rail	50.0	11.0	M12x45	1800.0	300.0	Stainless Steel
20272388	Shaft & Rail	50.0	11.0	M12x45	2100.0	300.0	Stainless Steel
20272395	Shaft & Rail	50.0	11.0	M12x45	240.0	300.0	Stainless Steel
20272401	Shaft & Rail	50.0	11.0	M12x45	2700.0	300.0	Stainless Steel
20272418	Shaft & Rail	50.0	11.0	M12x45	3000.0	300.0	Stainless Steel
20272425	Shaft & Rail	50.0	11.0	M12x45	3300.0	300.0	Stainless Steel
20272432	Shaft & Rail	50.0	11.0	M12x45	360.0	300.0	Stainless Steel
20272449	Shaft & Rail	50.0	11.0	M12x45	3900.0	300.0	Stainless Steel
20272456	Shaft & Rail	50.0	11.0	M12x45	4200.0	300.0	Stainless Steel
20272463	Shaft & Rail	50.0	11.0	M12x45	4500.0	300.0	Stainless Steel
20272470	Shaft & Rail	50.0	11.0	M12x45	480.0	300.0	Stainless Steel
20272487	Shaft & Rail	50.0	11.0	M12x45	5100.0	300.0	Stainless Steel

Shaft Support Rails

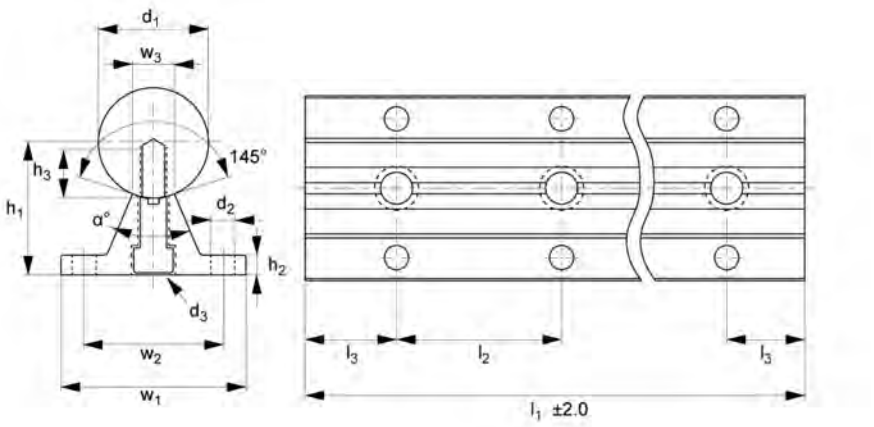



Part Number	Rail Type	d1 tol. h6	d2	d3	l1	l2	Material
20272494	Shaft & Rail	50.0	11.0	M12x45	5400.0	300.0	Stainless Steel
20272500	Shaft & Rail	50.0	11.0	M12x45	5700.0	300.0	Stainless Steel
20272517	Shaft & Rail	50.0	11.0	M12x45	600.0	300.0	Stainless Steel
20272524	Support Rail	12.0	4.5	8.0	600.0	75.0	Aluminium
20272593	Support Rail	12.0	4.5	8.0	600.0	120.0	Aluminium
20272531	Support Rail	16.0	5.5	9.5	600.0	100.0	Aluminium
20272609	Support Rail	16.0	5.5	9.5	600.0	150.0	Aluminium
20272548	Support Rail	20.0	6.6	11.0	600.0	100.0	Aluminium
20272616	Support Rail	20.0	6.6	11.0	600.0	150.0	Aluminium
20272555	Support Rail	25.0	6.6	14.0	600.0	120.0	Aluminium
20272623	Support Rail	25.0	6.6	14.0	600.0	200.0	Aluminium
20272562	Support Rail	30.0	9.0	17.0	600.0	150.0	Aluminium
20272630	Support Rail	30.0	9.0	17.0	600.0	200.0	Aluminium
20272579	Support Rail	40.0	9.0	17.0	600.0	200.0	Aluminium
20272647	Support Rail	40.0	9.0	17.0	600.0	300.0	Aluminium
20272586	Support Rail	50.0	11.0	19.0	600.0	200.0	Aluminium
20272654	Support Rail	50.0	11.0	19.0	600.0	300.0	Aluminium

Open Linear Ball Bushing Carriages

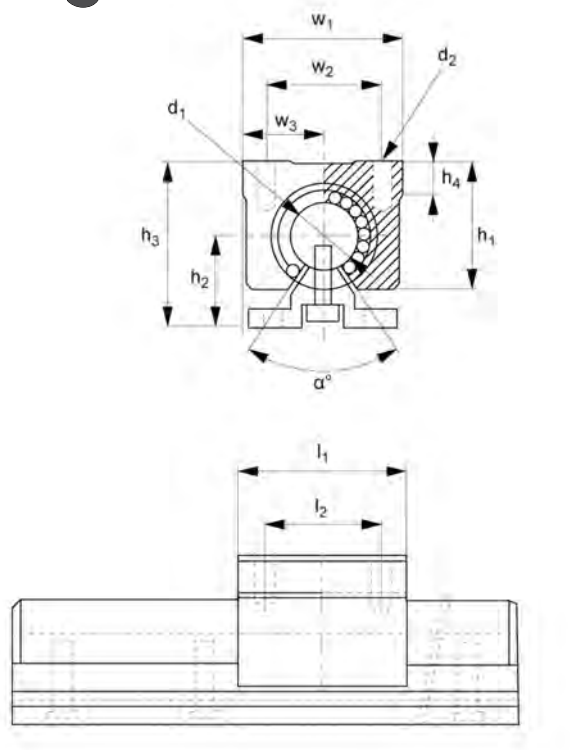



Features

- Useful for heavy weights and long stroke applications.
- It can withstand temperatures from 20C to +80C.
- It keeps the weight down, take the loads and facilitate the movement.

These Open Linear Ball Bushing Carriages are used in linear motion systems to guide and support moving parts. These are to be used only with hardened steel shafts and the ball bearings allow the carriage to move smoothly along the rail. They are particularly useful for heavy weights and long stroke applications.

The aluminium housing helps to keep the weight down whilst the hardened steel balls inside the bushing take the loads and facilitate the movement. Only to be used on hardened linear shafts.

Its unflanged design enables a simple compact installation and integration into existing systems. It can withstand temperatures from 20C to +80C. Commonly used in applications such as food packaging machines, printing machines, computers, or tool grinders.

Open Linear Ball Bushing Carriages

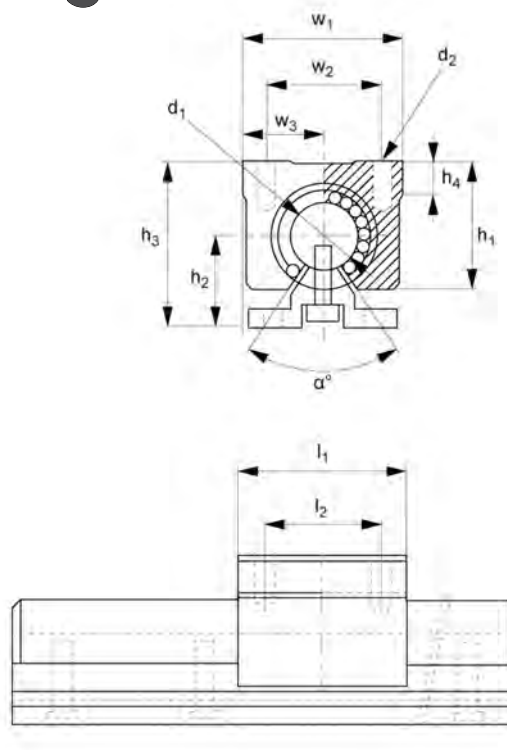



Part Number	d1 tol H6	l1	d2	h1	h2	h3 ±005	h4
20262686	16.0	45.0	M5x12	33.0	26.0	46.0	9.0
20262693	20.0	50.0	M6x12	39.0	32.0	55.0	11.0
20262709	25.0	65.0	M6x12	47.0	36.0	62.0	14.0
20262716	30.0	70.0	M8x18	56.0	42.0	75.0	15.0
20262730	40.0	90.0	M10x20	72.0	50.0	92.0	20.0
20262747	50.0	110.0	M10x20	91.0	60.0	113.0	25.0

Flanged Linear Carriages

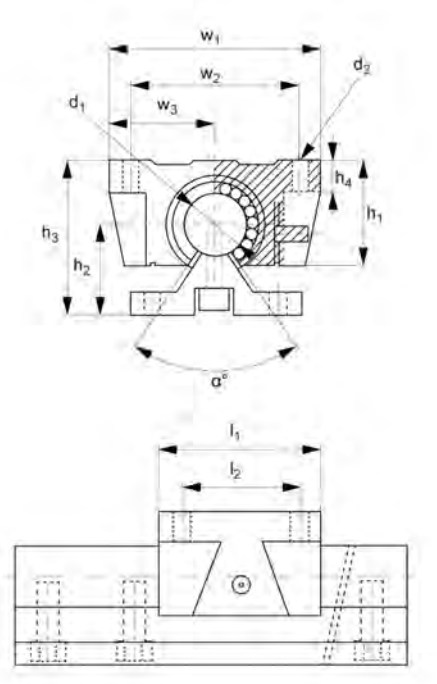



Features

- It comprises of a steel linear bushing inside a flanged aluminium housing providing a great surface area to mount to.
- It can withstand temperatures from 20C to +80C.
- It keeps the weight down, take the loads and facilitate the movement.

Specifications

Material: Aluminium

These Flanged Linear bushing Carriages are used in linear motion systems to guide and support moving parts. It comprises of a steel linear bushing inside a flanged aluminium housing providing a great surface area to mount to.

The aluminium housing helps to keep the weight down whilst the hardened steel balls inside the bushing take the loads and facilitate the movement. Only to be used on hardened linear shafts.

The open bearing carriages are only for use with shaft support rails. It can withstand temperatures from 20C to +80C. However, steel ball retainers can be provided for higher temperature applications up to +120C without end seals. Commonly used in applications such as food packaging machines, printing machines, computers, or tool grinders.

Flanged Linear Carriages

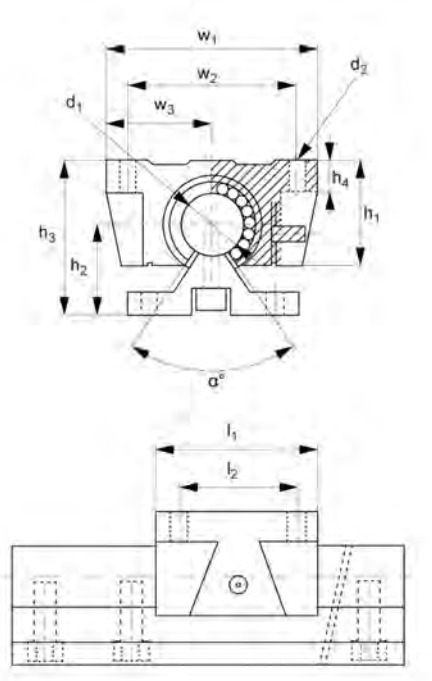



Part Number	d1 tol H6	l1	d2	h1	h2	h3 ±005	h4
20263362	16.0	42.0	M5	26.0	26.0	44.0	8.0
20263379	20.0	51.0	M6	31.0	32.0	53.0	10.0
20263386	25.0	65.0	M8	41.0	36.0	64.0	12.0
20263393	30.0	75.0	M8	48.0	42.0	76.0	12.0
20263447	16.0	42.0	M5	26.0	26.0	44.0	8.0
20263454	20.0	51.0	M6	31.0	32.0	53.0	10.0
20263461	25.0	65.0	M8	41.0	36.0	64.0	12.0

Open Linear Ball Bushings

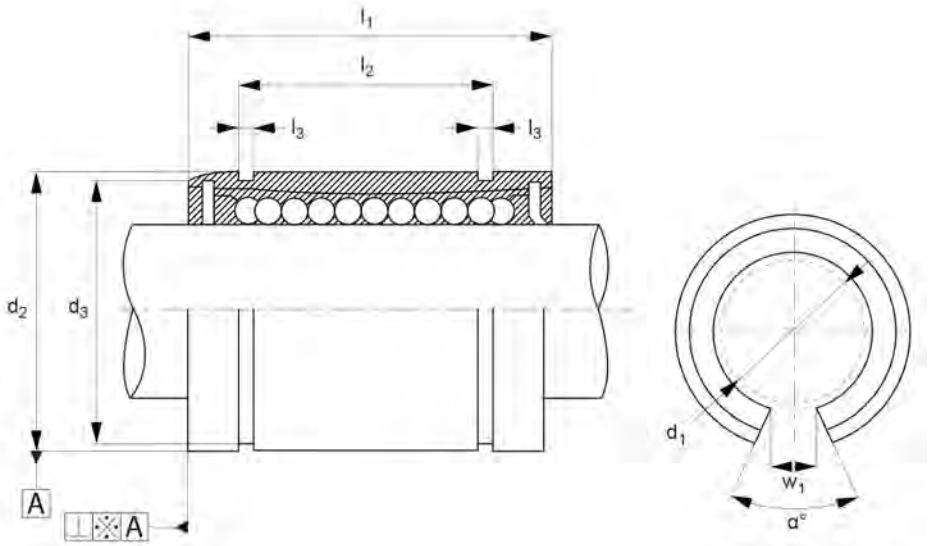



Features

- Composed of a housing with a row of 4-6 round ball circuits housed in a cage.
- Typically used with a shaft support rail.
- It can withstand temperatures from -20C to +80C.

Specifications

Material: Stainless Steel, Steel

These Open Linear Ball Bushings are used in linear motion systems and are designed to provide a smooth and precise movement along a linear axis, allowing for accurate positioning and motion control. Composed of a housing with a row of 4-6 round ball circuits housed in a cage. These balls are in direct contact with the linear shaft, a cylindrical rod that the bushing slides along, providing low friction and high load capacity.

They are typically used with a shaft support rail. It can withstand temperatures from -20C to +80C. Ideal for use in applications such as automotive equipment, punching presses, and printing machines.

Open Linear Ball Bushings

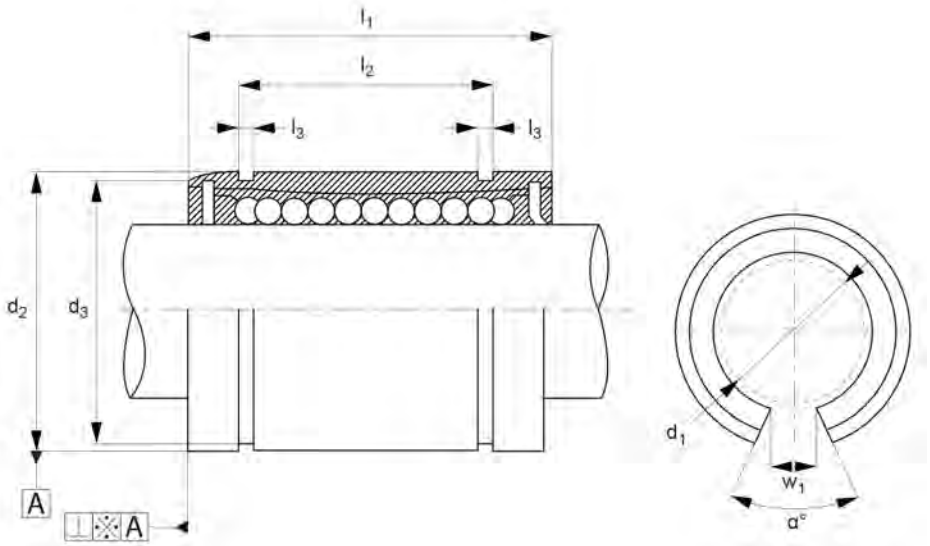



Part Number	d1 tol. h6	d2 tol. h6	l1	d3	l2	l3	w1
20155469	12.0	22.0	32.0	21.0	22.9	1.30	7.3
20155568	16.0	26.0	36.0	24.9	24.9	1.30	10.0
20155650	20.0	32.0	45.0	30.3	31.5	1.60	10.0
20155759	25.0	40.0	58.0	37.5	44.1	1.85	12.5
20155797	30.0	47.0	68.0	44.5	52.1	1.85	12.5
20155834	40.0	62.0	80.0	59.0	60.6	2.15	16.8
20155896	50.0	75.0	100.0	72.0	77.6	2.65	21.0
20155957	60.0	90.0	125.0	86.5	101.7	3.15	27.2
20157357	12.0	22.0	32.0	21.0	22.9	1.30	7.5
20157364	16.0	26.0	36.0	24.9	24.9	1.30	10.0
20157371	20.0	32.0	45.0	30.3	31.5	1.60	10.0
20157388	25.0	40.0	58.0	37.5	44.1	1.85	12.5

Manual Shaft Clamps

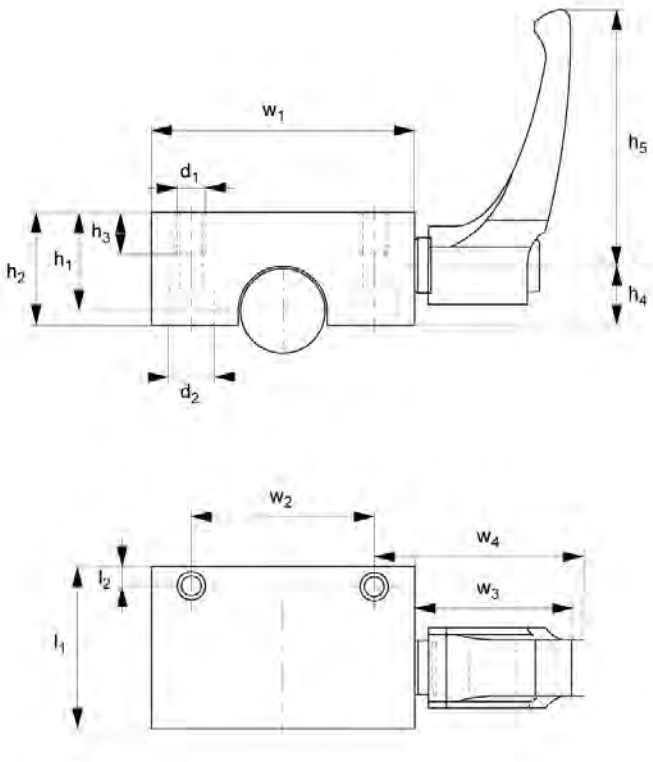



Features

- Designed to be used in conjunction with linear bearings and act as a mecanism to hold a moving component.
- Features a sturdy structure that ensures strength and longevity.
- Used in automotive, industrial machinery, and manufacturing processes.

Specifications

Material: Aluminium

These Manual Shaft Clamps are designed to be used in conjunction with linear bearings and act as a mecanism to hold a moving component or fixture in place until the clamp is released.

When the clamping lever is pressed, the contact faces come into contact with the shaft bar, clamping it in place. They have a sturdy structure that ensures strength and longevity. This enables them to resist external forces.

It is simple and dependable, and it is operated manually. The contact profiles press simultaneously on the rail surfaces by pressing the adjustable locking lever. The floating contact profiles guarantee that force is distributed symmetrically on the linear guide. Used in automotive, industrial machinery, and manufacturing processes.

Manual Shaft Clamps

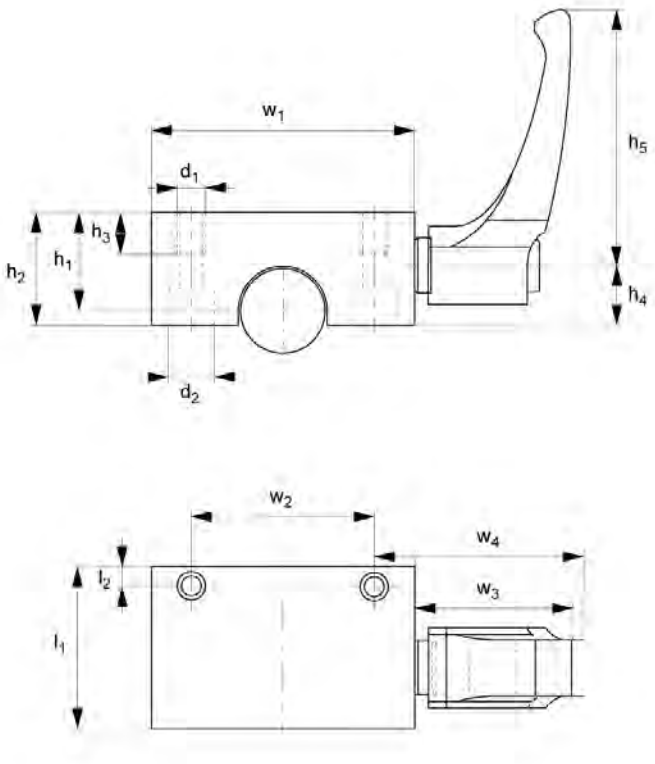



Part Number	Shaft dia	h1	l1	w1	w2	w3	w4
20175993	12.0	18.0	32.0	43.0	32.0	30.5	33.5
20175757	16.0	22.0	38.0	53.0	40.0	30.5	33.5
20175733	20.0	25.0	44.0	60.0	45.0	38.5	41.5
20175962	25.0	30.0	52.0	78.0	60.0	38.5	41.5
20175740	30.0	35.0	58.0	87.0	68.0	46.5	50.5
20175986	40.0	45.0	68.0	108.0	86.0	56.5	61.5
20175979	50.0	50.0	76.0	132.0	108.0	56.5	61.5

Shaft End Supports

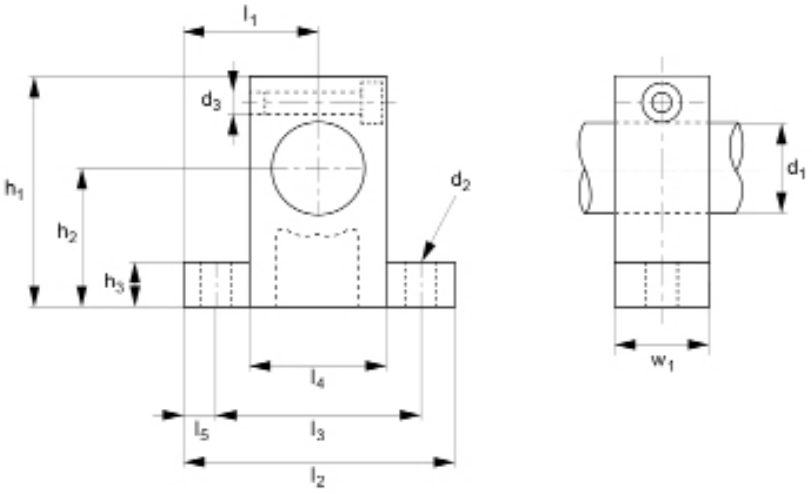



Features

- Provide linear shafts with stability, alignment, and support.
- Firmly keep the shaft in position, limiting lateral or radial movement.
- It is used in machine tools, medical devices, and industrial automation equipment

Specifications

Material: Aluminium

Shaft End Supports provide linear shafts with stability, alignment, and support. These components are intended to firmly hold standard shaft diameters in place while allowing for smooth and accurate movement of the linear bushing.

They firmly keep the shaft in position, limiting lateral or radial movement that could cause misalignment or excessive wear.

It is used in applications including machine tools, medical devices, and industrial automation equipment.

Shaft End Supports

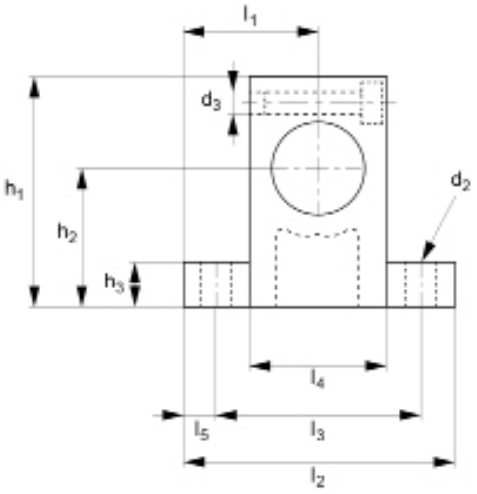

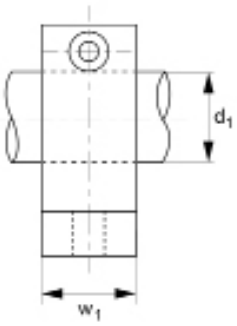



Part Number	d1	h2	h3	h1	h4	h6	W1
20272890	8.0	5.5	M4	32.8	20.0	6.0	21.0
20272807	10.0	5.5	M4	32.8	20.0	6.0	21.0
20272814	12.0	5.5	M4	38.0	23.0	6.0	21.0
20272821	13.0	5.5	M4	38.0	23.0	6.0	21.0
20272838	16.0	5.5	M4	44.0	27.0	8.0	24.0
20272845	20.0	6.6	M5	51.0	31.0	10.0	30.0
20272852	25.0	6.6	M6	60.0	35.0	12.0	35.0
20272869	30.0	9.0	M6	70.0	42.0	12.0	42.0
20272876	35.0	11.0	M8	85.0	50.0	15.0	49.0
20272883	40.0	11.0	M8	96.0	60.0	15.0	57.0

Ball & Socket Joints - with Flats on Housing

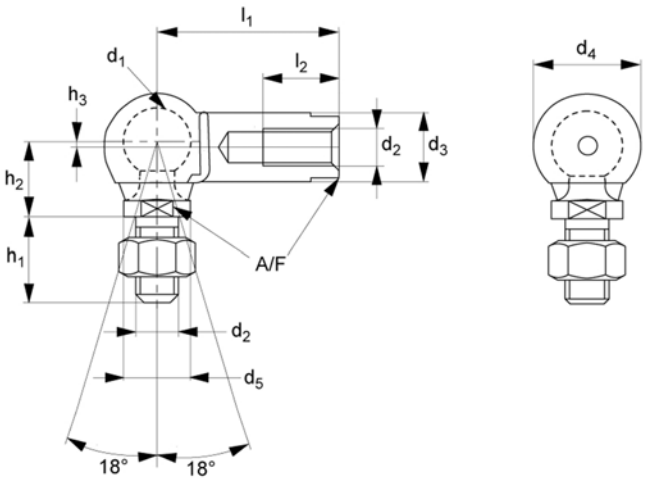



Features

- Ball and socket provides long-lasting performance and smooth operation by reducing friction and wear.
- The flat on the housing aids installation by allowing a spanner to grip the part.
- Used in automation systems, medical equipment, and construction equipment.

Specifications

Material: 303 Stainless Steel, Steel

These Ball and Socket Joints with flat housings are used to connect two items together. The joints' ball and socket system allows for smooth and flexible movement in numerous directions. The flat part of the housing aids installation by allowing a spanner to grip the part.

The ball and socket provide long-lasting performance and smooth operation by reducing friction and wear in connecting components by allowing flexibility where there are offsets.

It is supplied without a hexagon nut. Due to their ease of installation and secure connection, they are extensively used in automation systems, medical equipment, and construction equipment.

Ball & Socket Joints - with Flats on Housing

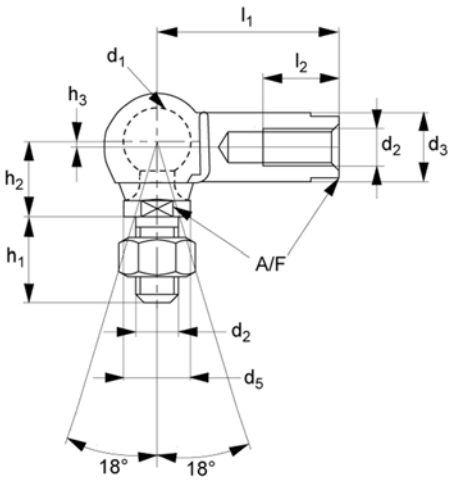

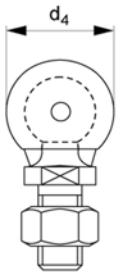



Part Number	Thread hand	d1	l1 ±0.3	d2	d3 ±0.5	d4 ±0.5	Material
20213541	Right Hand	8.0	22.0	M5	8.0	12.8	Steel
20213558	Right Hand	10.0	25.0	M6	10.0	14.8	Steel
20213572	Right Hand	13.0	30.0	M8	13.0	19.3	Steel
20213589	Right Hand	16.0	35.0	M10	16.0	24.0	Steel
20213596	Right Hand	16.0	35.0	M12	16.0	24.0	Steel
20213602	Right Hand	19.0	45.0	M14	22.0	30.0	Steel
20213619	Right Hand	19.0	45.0	M14	22.0	30.0	Steel
20213626	Right Hand	19.0	45.0	M16	22.0	30.0	Steel
20213633	Left Hand	8.0	22.0	M5	8.0	12.8	Steel
20213640	Left Hand	10.0	25.0	M6	10.0	14.8	Steel
20213657	Left Hand	13.0	30.0	M8	13.0	19.3	Steel
20213664	Left Hand	16.0	35.0	M10	16.0	24.0	Steel
20213671	Left Hand	16.0	35.0	M12	16.0	24.0	Steel
20213688	Left Hand	19.0	45.0	M14	22.0	30.0	Steel
20213695	Left Hand	19.0	45.0	M14	22.0	30.0	Steel
20213701	Left Hand	19.0	45.0	M16	22.0	30.0	Steel
20213718	Right Hand	8.0	22.0	M5	8.0	12.8	303 Stainless Steel
20213725	Right Hand	10.0	25.0	M6	10.0	14.8	303 Stainless Steel
20213732	Right Hand	13.0	30.0	M8	13.0	19.3	303 Stainless Steel
20213749	Right Hand	16.0	35.0	M10	16.0	24.0	303 Stainless Steel

Ball & Socket Joints - with Flats on Housing

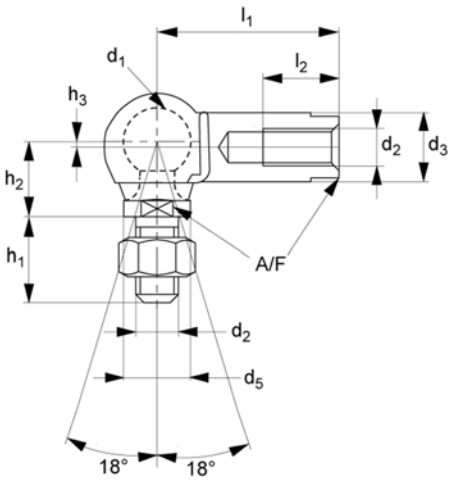

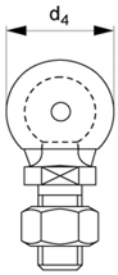



Part Number	Thread hand	d1	l1 ±0.3	d2	d3 ±0.5	d4 ±0.5	Material
20213756	Right Hand	16.0	35.0	M12	16.0	24.0	303 Stainless Steel
20213763	Right Hand	22.0	45.0	M14	22.0	30.0	303 Stainless Steel
20213770	Right Hand	22.0	45.0	M14	22.0	30.0	303 Stainless Steel
20213787	Right Hand	22.0	45.0	M16	22.0	30.0	303 Stainless Steel
20213794	Left Hand	8.0	22.0	M5	8.0	12.8	303 Stainless Steel
20213800	Left Hand	10.0	25.0	M6	10.0	14.8	303 Stainless Steel
20213817	Left Hand	13.0	30.0	M8	13.0	19.3	303 Stainless Steel
20213824	Left Hand	16.0	35.0	M10	16.0	24.0	303 Stainless Steel
20213831	Left Hand	16.0	35.0	M12	16.0	24.0	303 Stainless Steel
20213848	Left Hand	19.0	45.0	M14	22.0	30.0	303 Stainless Steel
20213855	Left Hand	19.0	45.0	M14	22.0	30.0	303 Stainless Steel

Ball & Socket Joints - with Sealing Cap

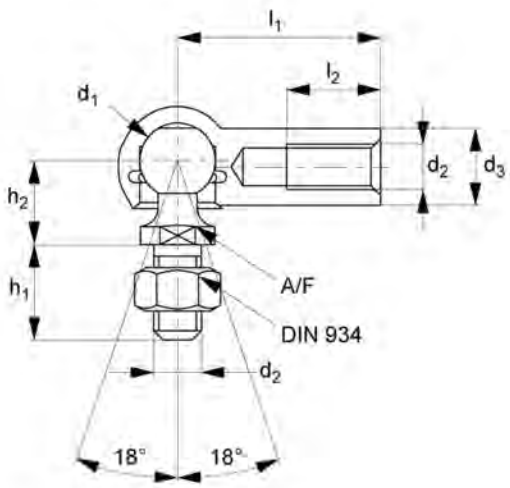

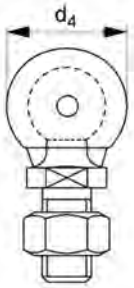



Features

- It has little friction and wear, assuring long-lasting performance.
- A sealing cap is connected to the housing to prevent dust, or debris from entering the joint.
- Used in automation systems, medical equipment, and construction equipment.

Specifications

Material: Stainless Steel, Steel

These Ball and Socket Joints with sealing caps are used to connect two components in numerous ways. It has little friction and wear, assuring long-lasting performance for smooth operations.

They are made up of a ball that fits into a socket, allowing the two sections to move freely relative to each other. In most ball and socket joints, the ball is positioned on a spindle that spins within a housing. The housing is typically affixed to each of the two components being combined. A sealing cap is connected to the housing to prevent dust, debris, and other particles from entering the joint and causing damage.

It is supplied without a hexagon nut. Due to their ease of installation and secure connection, they are extensively used in automation systems, medical equipment, and construction equipment.

Ball & Socket Joints - with Sealing Cap

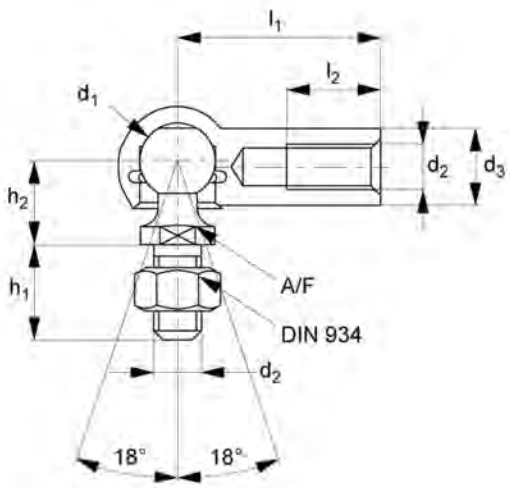

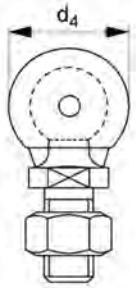



Part Number	Thread hand	d1	l1 ±0.3	d2	d3	d4	Material
20213190	Right Hand	8.0	22.0	M5	8.0	12.8	Steel
20213206	Right Hand	10.0	25.0	M6	10.0	14.8	Steel
20213213	Right Hand	13.0	30.0	M8	13.0	19.3	Steel
20213220	Right Hand	16.0	35.0	M10	16.0	24.0	Steel
20213237	Right Hand	16.0	35.0	M12	16.0	24.0	Steel
20213244	Right Hand	22.0	45.0	M14	22.0	30.0	Steel
20213251	Right Hand	22.0	45.0	M14	22.0	30.0	Steel
20213268	Right Hand	22.0	45.0	M16	22.0	30.0	Steel
20213275	Left Hand	8.0	22.0	M5	8.0	12.8	Steel
20213282	Left Hand	10.0	25.0	M6	10.0	14.8	Steel
20213299	Left Hand	13.0	30.0	M8	13.0	19.3	Steel
20213305	Left Hand	16.0	35.0	M10	16.0	24.0	Steel
20213312	Left Hand	16.0	35.0	M12	16.0	24.0	Steel
20213329	Left Hand	22.0	45.0	M14	22.0	30.0	Steel
20213336	Left Hand	22.0	45.0	M14	22.0	30.0	Steel
20213343	Left Hand	22.0	45.0	M16	22.0	30.0	Steel
20213350	Right Hand	8.0	22.0	M5	8.0	12.8	Stainless Steel
20213367	Right Hand	10.0	25.0	M6	10.0	14.8	Stainless Steel
20213374	Right Hand	13.0	30.0	M8	13.0	19.3	Stainless Steel
20213381	Right Hand	16.0	35.0	M10	16.0	24.0	Stainless Steel

Ball & Socket Joints - with Sealing Cap

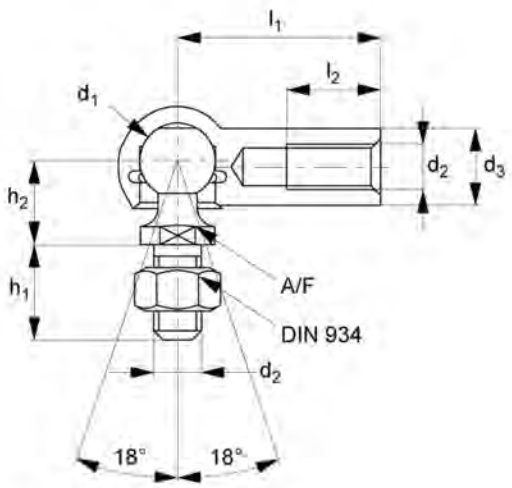

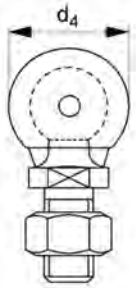



Part Number	Thread hand	d1	l1 ±0.3	d2	d3	d4	Material
20213398	Right Hand	16.0	35.0	M12	16.0	24.0	Stainless Steel
20213404	Right Hand	22.0	45.0	M14	22.0	30.0	Stainless Steel
20213411	Right Hand	22.0	45.0	M14	22.0	30.0	Stainless Steel
20213428	Right Hand	22.0	45.0	M16	22.0	30.0	Stainless Steel
20213442	Left Hand	8.0	22.0	M5	8.0	12.8	Stainless Steel
20213459	Left Hand	10.0	25.0	M6	10.0	14.8	Stainless Steel
20213466	Left Hand	13.0	30.0	M8	13.0	19.3	Stainless Steel
20213473	Left Hand	16.0	35.0	M10	16.0	24.0	Stainless Steel
20213480	Left Hand	16.0	35.0	M12	16.0	24.0	Stainless Steel
20213497	Left Hand	22.0	45.0	M14	22.0	30.0	Stainless Steel
20213503	Left Hand	22.0	45.0	M14	22.0	30.0	Stainless Steel
20213510	Left Hand	22.0	45.0	M16	22.0	30.0	Stainless Steel

Ball & Socket Joints

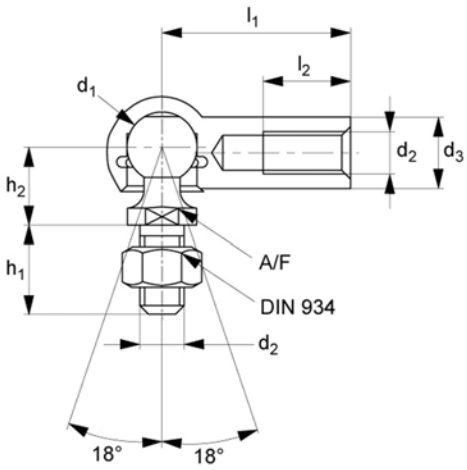

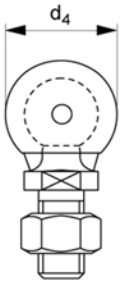



Features

- Offers efficient and accurate movement, ensuring smooth operation and reducing friction.
- It has a ball-shaped end and a socket-shaped housing, giving it a lot of mobility and flexibility.
- Used in automation systems, medical equipment, and construction equipment.

Specifications

Material: 303 Stainless Steel, Steel

These Ball and Socket Joints may be used to join two components in various ways. It is strong and long-lasting, guaranteeing dependable performance even under enormous loads. It allows for efficient and accurate movement, ensuring smooth operation and reducing friction.

It has a ball-shaped end and a socket-shaped housing, giving it a lot of mobility and flexibility. Its design allows rotation and angular motion, making it perfect for multidirectional applications.

It is supplied without a hexagon nut. Due to their ease of installation and secure connection, they are extensively used in automation systems, medical equipment, and construction equipment.

Ball & Socket Joints

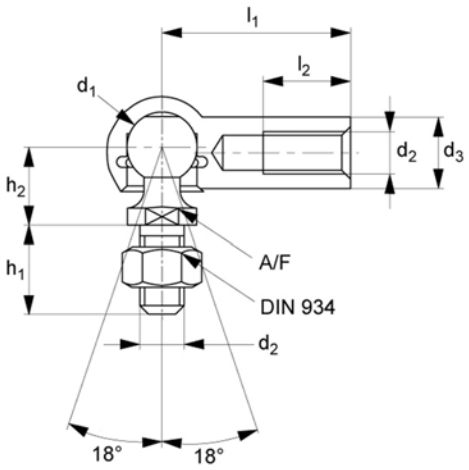

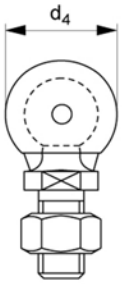



Part Number	Thread hand	d1	l1 ±0.3	d2	d3	d4	Material
20212841	Right Hand	8.0	22.0	M5	8.0	12.8	Steel
20212858	Right Hand	10.0	25.0	M6	10.0	14.8	Steel
20212865	Right Hand	13.0	30.0	M8	13.0	19.3	Steel
20212872	Right Hand	16.0	35.0	M10	16.0	24.0	Steel
20212889	Right Hand	16.0	35.0	M12	16.0	24.0	Steel
20212896	Right Hand	19.0	45.0	M14	22.0	30.0	Steel
20212902	Right Hand	19.0	45.0	M14	22.0	30.0	Steel
20212919	Right Hand	19.0	45.0	M16	22.0	30.0	Steel
20212940	Left Hand	8.0	22.0	M5	8.0	12.8	Steel
20212957	Left Hand	10.0	25.0	M6	10.0	14.8	Steel
20212964	Left Hand	13.0	30.0	M8	13.0	19.3	Steel
20212971	Left Hand	16.0	35.0	M10	16.0	24.0	Steel
20212988	Left Hand	16.0	35.0	M12	16.0	24.0	Steel
20212995	Left Hand	19.0	45.0	M14	22.0	30.0	Steel
20213008	Left Hand	19.0	45.0	M14	22.0	30.0	Steel
20213015	Left Hand	19.0	45.0	M16	22.0	30.0	Steel
20213022	Right Hand	8.0	22.0	M5	8.0	12.8	303 Stainless Steel
20213039	Right Hand	10.0	25.0	M6	10.0	14.8	303 Stainless Steel
20213046	Right Hand	13.0	30.0	M8	13.0	19.3	303 Stainless Steel
20213053	Right Hand	16.0	35.0	M10	16.0	24.0	303 Stainless Steel
20213060	Right Hand	16.0	35.0	M12	16.0	24.0	303 Stainless Steel

Ball & Socket Joints

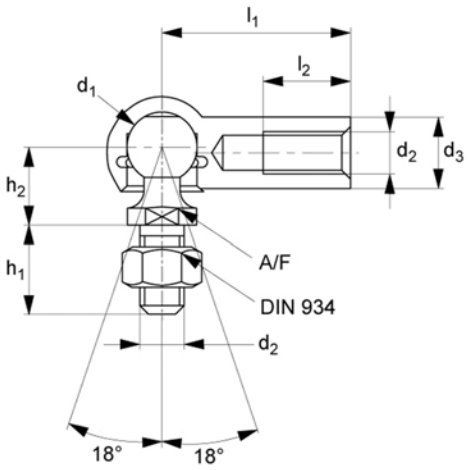

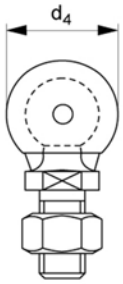



Part Number	Thread hand	d1	l1 ±0.3	d2	d3	d4	Material
20213077	Right Hand	19.0	45.0	M14	22.0	30.0	303 Stainless Steel
20213084	Right Hand	19.0	45.0	M14	22.0	30.0	303 Stainless Steel
20213091	Right Hand	19.0	45.0	M16	22.0	30.0	303 Stainless Steel
20213107	Left Hand	8.0	22.0	M5	8.0	12.8	303 Stainless Steel
20213114	Left Hand	10.0	25.0	M6	10.0	14.8	303 Stainless Steel
20213121	Left Hand	13.0	30.0	M8	13.0	19.3	303 Stainless Steel
20213138	Left Hand	16.0	35.0	M10	16.0	24.0	303 Stainless Steel
20213145	Left Hand	16.0	35.0	M12	16.0	24.0	303 Stainless Steel
20213152	Left Hand	19.0	45.0	M14	22.0	30.0	303 Stainless Steel
20213169	Left Hand	19.0	45.0	M14	22.0	30.0	303 Stainless Steel
20213176	Left Hand	19.0	45.0	M16	22.0	30.0	303 Stainless Steel
20217020	Right Hand	8.0	22.0	M5	8.0	12.8	303 Stainless Steel
20217037	Right Hand	10.0	25.0	M6	10.0	14.8	303 Stainless Steel
20217044	Right Hand	13.0	30.0	M8	13.0	19.3	303 Stainless Steel
20217051	Right Hand	16.0	35.0	M10	16.0	24.0	303 Stainless Steel

Clevis Joints with Pin

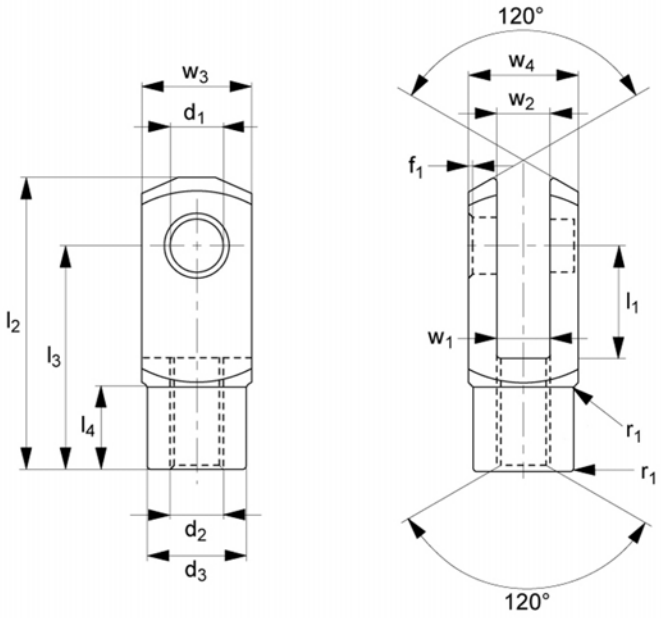



Features

- U-shaped connection between two rods or shafts to facilitate tractive or linear thrust movements.
- Held with a cotter pin and a washer to prevent it from falling loose
- It is employed as a coupling on the end of air cylinders or at each end of a turnbuckle or wire rope for tensioning.

Specifications

Material: 303 Stainless Steel, Steel

These Clevis Joints with Pin are a coupling in which the mating parts fit between the forks and are secured in position by clevis pins. They serve as a U-shaped connection between two rods or shafts to facilitate tractive or linear thrust movements.

The clevis pin is held with a cotter pin and a washer to prevent it from falling loose. This ensures the joint's stability and integrity, even under heavy loads and stresses. If necessary, the joint can be disassembled for maintenance by withdrawing the cotter pin. This enables component inspection, lubrication, or replacement, assuring the joint's continuous performance and durability.

They are easy to install and adjust using standard thread. They are most typically employed as a coupling on the end of air cylinders or at each end of a turnbuckle or wire rope for tensioning. Still, they can also be found in various other sectors and applications such as automotive, construction, and manufacturing.

Clevis Joints with Pin

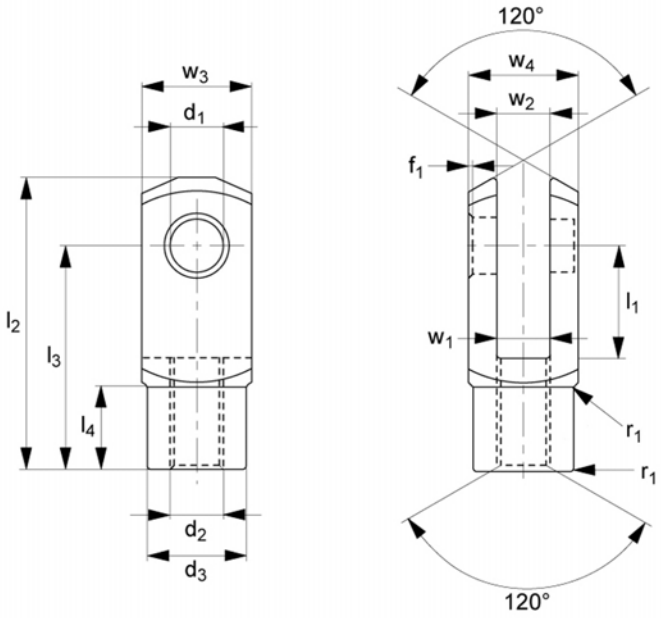



Part Number	Size	Thread hand	d2	d3	l1 ±0.5	l2 ±0.5	Material
20192860	5x10	Right Hand	M5	9.0	10.0	26.0	Steel
20192877	5x20	Right Hand	M5	9.0	20.0	36.0	Steel
20192846	6x12	Right Hand	M6	10.0	12.0	31.0	Steel
20192853	6x24	Right Hand	M6	10.0	24.0	43.0	Steel
20192884	8x16	Right Hand	M8	14.0	16.0	42.0	Steel
20192891	8x16	Right Hand	M8	14.0	16.0	42.0	Steel
20192907	8x32	Right Hand	M8	14.0	32.0	58.0	Steel
20192914	8x32	Right Hand	M8	14.0	32.0	58.0	Steel
20192921	10x20	Right Hand	M10	18.0	20.0	52.0	Steel
20192938	10x20	Right Hand	M10	18.0	20.0	52.0	Steel
20192945	10x40	Right Hand	M10	18.0	40.0	72.0	Steel
20192952	10x40	Right Hand	M10	18.0	40.0	72.0	Steel
20192969	12x24	Right Hand	M12	20.0	24.0	62.0	Steel
20192976	12x24	Right Hand	M12	20.0	24.0	62.0	Steel
20192983	12x48	Right Hand	M12	20.0	48.0	86.0	Steel
20192990	12x48	Right Hand	M12	20.0	48.0	86.0	Steel
20193003	14x28	Right Hand	M14	24.0	28.0	72.0	Steel
20193010	14x28	Right Hand	M14	24.0	28.0	72.0	Steel

Clevis Joints with Pin

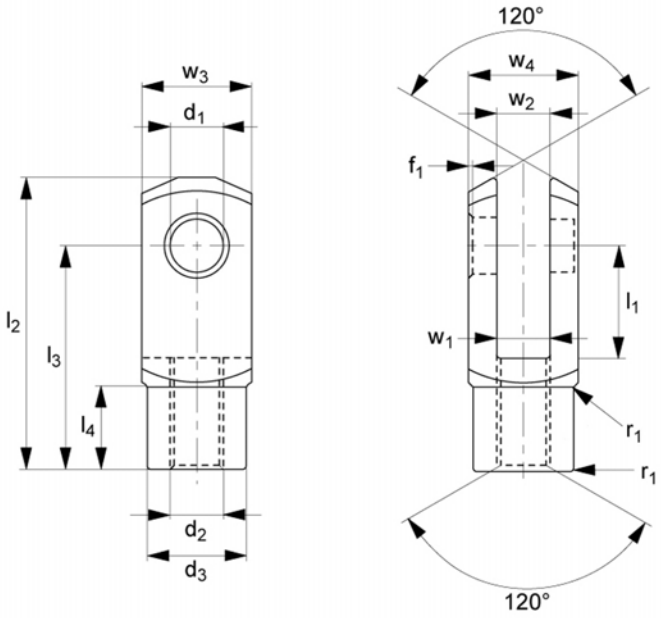



Part Number	Size	Thread hand	d2	d3	l1 ±0.5	l2 ±0.5	Material
20193027	14x56	Right Hand	M14	24.0	56.0	101.0	Steel
20193034	14x56	Right Hand	M14	24.0	56.0	101.0	Steel
20193041	16x32	Right Hand	M16	26.0	32.0	83.0	Steel
20193058	16x32	Right Hand	M16	26.0	32.0	83.0	Steel
20193065	16x64	Right Hand	M16	26.0	64.0	115.0	Steel
20193072	16x64	Right Hand	M16	26.0	64.0	115.0	Steel
20193089	18x36	Right Hand	M18	30.0	36.0	94.0	Steel
20193096	18x36	Right Hand	M18	30.0	36.0	94.0	Steel
20193102	20x40	Right Hand	M20	34.0	40.0	105.0	Steel
20193119	20x40	Right Hand	M20	34.0	40.0	105.0	Steel
20193126	20x80	Right Hand	M20	34.0	80.0	145.0	Steel
20193133	20x80	Right Hand	M20	34.0	80.0	145.0	Steel
20193140	25x50	Right Hand	M24	42.0	50.0	132.0	Steel
20193157	25x50	Right Hand	M24	42.0	50.0	132.0	Steel
20193164	28x56	Right Hand	M27	48.0	56.0	148.0	Steel
20193171	28x56	Right Hand	M27	48.0	56.0	148.0	Steel
20193188	30x54	Right Hand	M27	48.0	54.0	148.0	Steel
20193195	30x60	Right Hand	M30	52.0	60.0	160.0	Steel

Clevis Joints with Pin

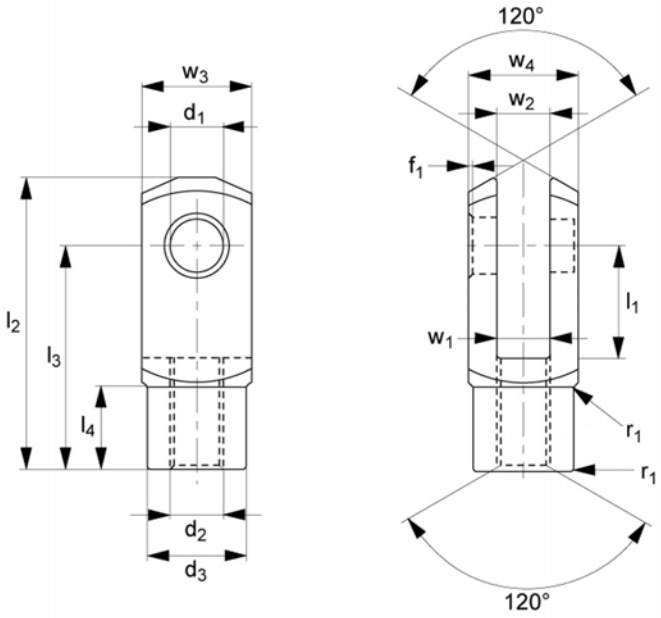



Part Number	Size	Thread hand	d2	d3	l1 ±0.5	l2 ±0.5	Material
20193201	30x60	Right Hand	M30	52.0	60.0	160.0	Steel
20193218	35x54	Right Hand	M36	60.0	54.0	188.0	Steel
20193225	35x72	Right Hand	M36	60.0	72.0	188.0	Steel
20193232	35x72	Right Hand	M36	60.0	72.0	188.0	Steel
20193249	36x72	Right Hand	M36	60.0	72.0	188.0	Steel
20193256	36x72	Right Hand	M36	60.0	72.0	188.0	Steel
20193263	40x84	Right Hand	M42	70.0	84.0	232.0	Steel
20193270	42x84	Right Hand	M42	70.0	84.0	232.0	Steel
20193287	42x84	Right Hand	M42	70.0	84.0	232.0	Steel
20193294	50x96	Right Hand	M48	82.0	96.0	265.0	Steel
20193300	50x96	Right Hand	M48	82.0	96.0	265.0	Steel
20193782	5x10	Right Hand	M5	9.0	10.0	26.0	303 Stainless Steel
20193799	5x20	Right Hand	M5	9.0	20.0	36.0	303 Stainless Steel
20193805	6x12	Right Hand	M6	10.0	12.0	31.0	303 Stainless Steel
20193812	6x24	Right Hand	M6	10.0	24.0	43.0	303 Stainless Steel
20193829	8x16	Right Hand	M8	14.0	16.0	42.0	303 Stainless Steel
20193836	8x16	Right Hand	M8	14.0	16.0	42.0	303 Stainless Steel

Clevis Joints with Pin

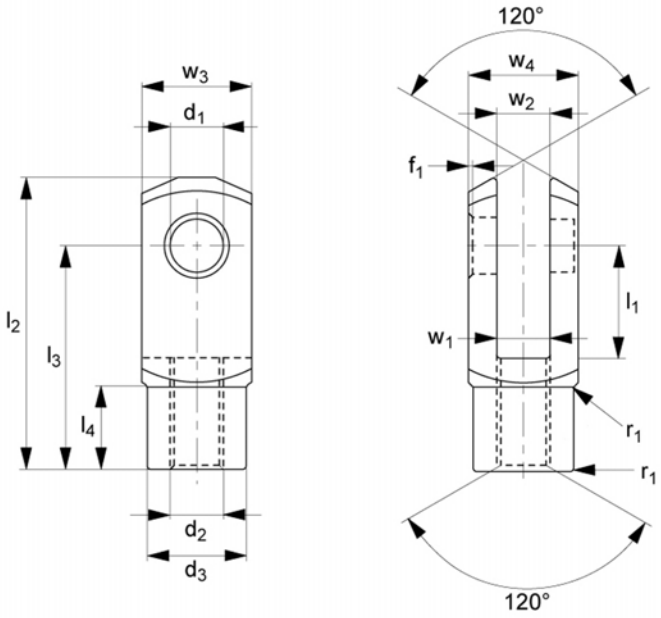



Part Number	Size	Thread hand	d2	d3	l1 ±0.5	l2 ±0.5	Material
20193843	8x32	Right Hand	M8	14.0	32.0	58.0	303 Stainless Steel
20193850	8x32	Right Hand	M8	14.0	32.0	58.0	303 Stainless Steel
20193867	10x20	Right Hand	M10	18.0	20.0	52.0	303 Stainless Steel
20193874	10x20	Right Hand	M10	18.0	20.0	52.0	303 Stainless Steel
20193881	10x40	Right Hand	M10	18.0	40.0	72.0	303 Stainless Steel
20193898	10x40	Right Hand	M10	18.0	40.0	72.0	303 Stainless Steel
20193904	12x24	Right Hand	M12	20.0	24.0	62.0	303 Stainless Steel
20193911	12x24	Right Hand	M12	20.0	24.0	62.0	303 Stainless Steel
20193928	12x48	Right Hand	M12	20.0	48.0	86.0	303 Stainless Steel
20193935	12x48	Right Hand	M12	20.0	48.0	86.0	303 Stainless Steel
20193942	14x28	Right Hand	M14	24.0	28.0	72.0	303 Stainless Steel
20193959	14x28	Right Hand	M14	24.0	28.0	72.0	303 Stainless Steel
20193966	14x56	Right Hand	M14	24.0	56.0	101.0	303 Stainless Steel
20193973	14x56	Right Hand	M14	24.0	56.0	101.0	303 Stainless Steel
20193980	16x32	Right Hand	M16	26.0	32.0	83.0	303 Stainless Steel

Clevis Joints with Pin

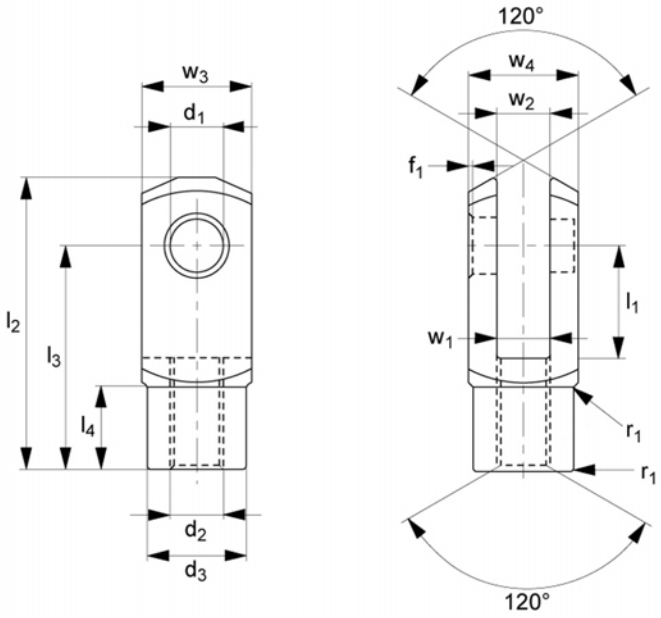



Part Number	Size	Thread hand	d2	d3	l1 ±0.5	l2 ±0.5	Material
20192839	16x32	Right Hand	M16	26.0	32.0	83.0	303 Stainless Steel
20193997	16x64	Right Hand	M16	26.0	64.0	115.0	303 Stainless Steel
20194000	16x64	Right Hand	M16	26.0	64.0	115.0	303 Stainless Steel
20194017	20x40	Right Hand	M20	34.0	40.0	105.0	303 Stainless Steel
20194024	20x40	Right Hand	M20	34.0	40.0	105.0	303 Stainless Steel
20194031	25x50	Right Hand	M24	42.0	50.0	132.0	303 Stainless Steel
20194048	25x50	Right Hand	M24	42.0	50.0	132.0	303 Stainless Steel
20193317	5x10	Left Hand	M5	9.0	10.0	26.0	Steel
20193324	5x20	Left Hand	M5	9.0	20.0	36.0	Steel
20193331	6x12	Left Hand	M6	10.0	12.0	31.0	Steel
20193348	6x24	Left Hand	M6	10.0	24.0	43.0	Steel
20193355	8x16	Left Hand	M8	14.0	16.0	42.0	Steel
20193362	8x16	Left Hand	M8	14.0	16.0	42.0	Steel
20193379	8x32	Left Hand	M8	14.0	32.0	58.0	Steel
20193386	8x32	Left Hand	M8	14.0	32.0	58.0	Steel
20193393	10x20	Left Hand	M10	18.0	20.0	52.0	Steel
20193409	10x20	Left Hand	M10	18.0	20.0	52.0	Steel

Clevis Joints with Pin

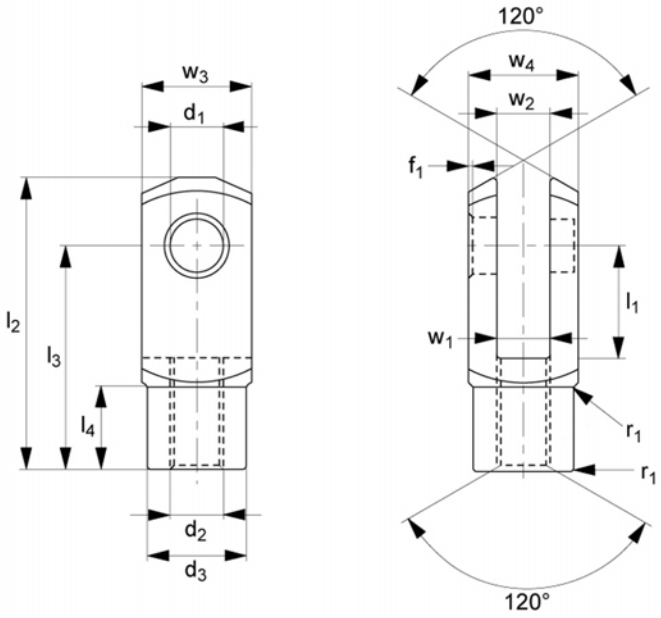



Part Number	Size	Thread hand	d2	d3	l1 ±0.5	l2 ±0.5	Material
20193416	10x40	Left Hand	M10	18.0	40.0	72.0	Steel
20193423	10x40	Left Hand	M10	18.0	40.0	72.0	Steel
20193430	12x24	Left Hand	M12	20.0	24.0	62.0	Steel
20193447	12x24	Left Hand	M12	20.0	24.0	62.0	Steel
20193454	12x48	Left Hand	M12	20.0	48.0	86.0	Steel
20193461	12x48	Left Hand	M12	20.0	48.0	86.0	Steel
20193478	14x28	Left Hand	M14	24.0	28.0	72.0	Steel
20193485	14x28	Left Hand	M14	24.0	28.0	72.0	Steel
20193492	14x56	Left Hand	M14	24.0	56.0	101.0	Steel
20193508	14x56	Left Hand	M14	24.0	56.0	101.0	Steel
20193515	16x32	Left Hand	M16	26.0	32.0	83.0	Steel
20193522	16x32	Left Hand	M16	26.0	32.0	83.0	Steel
20193539	16x64	Left Hand	M16	26.0	64.0	115.0	Steel
20193546	16x64	Left Hand	M16	26.0	64.0	115.0	Steel
20193553	18x36	Left Hand	M18	30.0	36.0	94.0	Steel
20193560	18x36	Left Hand	M18	30.0	36.0	94.0	Steel
20193577	20x40	Left Hand	M20	34.0	40.0	105.0	Steel
20193584	20x40	Left Hand	M20	34.0	40.0	105.0	Steel

Clevis Joints with Pin

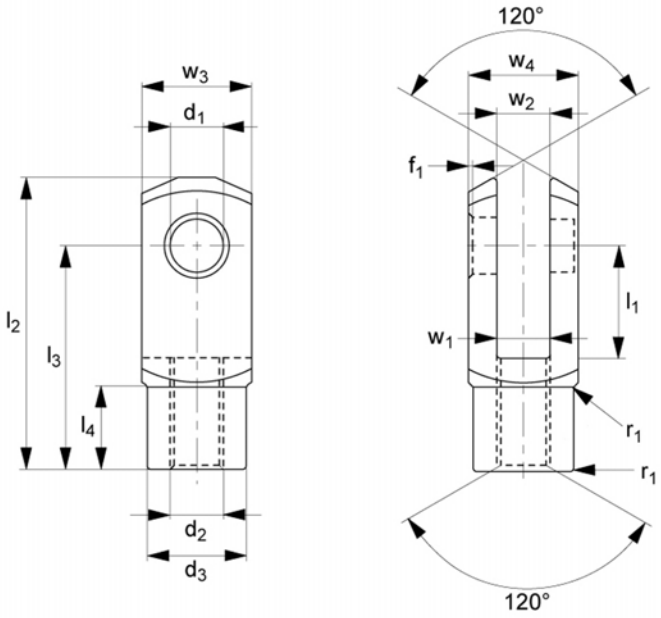



Part Number	Size	Thread hand	d2	d3	l1 ±0.5	l2 ±0.5	Material
20193591	20x80	Left Hand	M20	34.0	80.0	105.0	Steel
20193607	20x80	Left Hand	M20	34.0	80.0	105.0	Steel
20193614	25x50	Left Hand	M24	42.0	50.0	132.0	Steel
20193621	25x50	Left Hand	M24	42.0	50.0	132.0	Steel
20193638	28x56	Left Hand	M27	48.0	56.0	148.0	Steel
20193645	28x56	Left Hand	M27	48.0	56.0	148.0	Steel
20193652	30x54	Left Hand	M27	48.0	54.0	148.0	Steel
20193669	30x60	Left Hand	M30	52.0	60.0	160.0	Steel
20193676	30x60	Left Hand	M30	52.0	60.0	160.0	Steel
20193683	35x54	Left Hand	M36	60.0	54.0	188.0	Steel
20193690	35x72	Left Hand	M36	60.0	72.0	188.0	Steel
20193706	35x72	Left Hand	M36	60.0	72.0	188.0	Steel
20193713	36x72	Left Hand	M36	60.0	72.0	188.0	Steel
20193720	36x72	Left Hand	M36	60.0	72.0	188.0	Steel
20193737	40x84	Left Hand	M42	70.0	84.0	232.0	Steel
20193744	42x84	Left Hand	M42	70.0	84.0	232.0	Steel
20193751	42x84	Left Hand	M42	70.0	84.0	232.0	Steel
20193768	50x96	Left Hand	M48	82.0	96.0	265.0	Steel

Clevis Joints with Pin

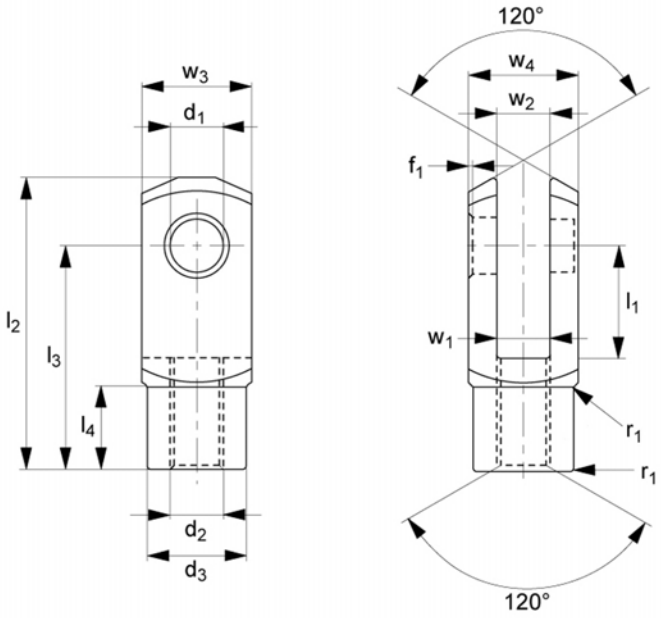



Part Number	Size	Thread hand	d2	d3	l1 ±0.5	l2 ±0.5	Material
20193775	50x96	Left Hand	M48	82.0	96.0	265.0	Steel
20194055	5x10	Left Hand	M5	9.0	10.0	26.0	303 Stainless Steel
20194062	5x20	Left Hand	M5	9.0	20.0	36.0	303 Stainless Steel
20194079	6x12	Left Hand	M6	10.0	12.0	31.0	303 Stainless Steel
20194086	6x24	Left Hand	M6	10.0	24.0	43.0	303 Stainless Steel
20194093	8x16	Left Hand	M8	14.0	16.0	42.0	303 Stainless Steel
20194109	8x16	Left Hand	M8	14.0	16.0	42.0	303 Stainless Steel
20194116	8x32	Left Hand	M8	14.0	32.0	58.0	303 Stainless Steel
20194123	8x32	Left Hand	M8	14.0	32.0	58.0	303 Stainless Steel
20194130	10x20	Left Hand	M10	18.0	20.0	52.0	303 Stainless Steel
20194147	10x20	Left Hand	M10	18.0	20.0	52.0	303 Stainless Steel
20194154	10x40	Left Hand	M10	18.0	40.0	72.0	303 Stainless Steel
20194161	10x40	Left Hand	M10	18.0	40.0	72.0	303 Stainless Steel
20194178	12x24	Left Hand	M12	20.0	24.0	62.0	303 Stainless Steel
20194185	12x24	Left Hand	M12	20.0	24.0	62.0	303 Stainless Steel

Clevis Joints with Pin

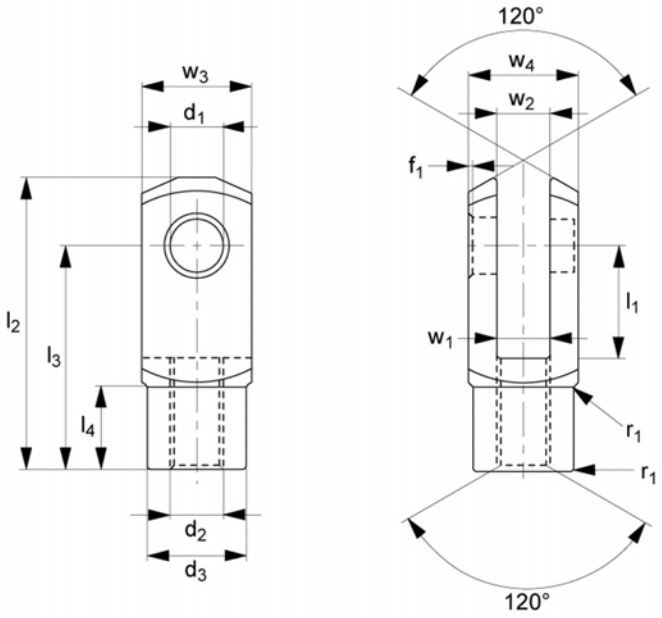



Part Number	Size	Thread hand	d2	d3	l1 ±0.5	l2 ±0.5	Material
20194192	12x48	Left Hand	M12	20.0	48.0	86.0	303 Stainless Steel
20194208	12x48	Left Hand	M12	20.0	48.0	86.0	303 Stainless Steel
20194215	14x28	Left Hand	M14	24.0	28.0	72.0	303 Stainless Steel
20194222	14x28	Left Hand	M14	24.0	28.0	72.0	303 Stainless Steel
20194239	14x56	Left Hand	M14	24.0	56.0	101.0	303 Stainless Steel
20194246	14x56	Left Hand	M14	24.0	56.0	101.0	303 Stainless Steel
20194253	16x32	Left Hand	M16	26.0	32.0	83.0	303 Stainless Steel
20194260	16x32	Left Hand	M16	26.0	32.0	83.0	303 Stainless Steel
20194277	16x64	Left Hand	M16	26.0	64.0	115.0	303 Stainless Steel
20194284	16x64	Left Hand	M16	26.0	64.0	115.0	303 Stainless Steel
20194291	20x40	Left Hand	M20	34.0	40.0	105.0	303 Stainless Steel
20194307	20x40	Left Hand	M20	34.0	40.0	105.0	303 Stainless Steel
20194314	25x50	Left Hand	M24	42.0	50.0	132.0	303 Stainless Steel
20194321	25x50	Left Hand	M24	42.0	50.0	132.0	303 Stainless Steel
20192235	5x10	Right Hand	M5	9.0	10.0	26.0	303 Stainless Steel

Clevis Joints with Pin

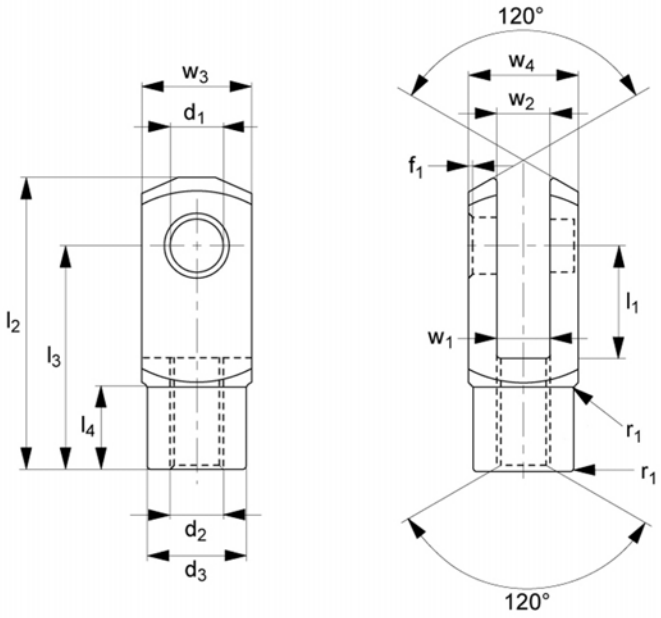



Part Number	Size	Thread hand	d2	d3	l1 ±0.5	l2 ±0.5	Material
20194338	5x20	Right Hand	M5	9.0	20.0	36.0	303 Stainless Steel
20192242	6x12	Right Hand	M6	10.0	12.0	31.0	303 Stainless Steel
20194345	6x24	Right Hand	M6	10.0	24.0	43.0	303 Stainless Steel
20192259	8x16	Right Hand	M8	14.0	16.0	42.0	303 Stainless Steel
20194352	8x16	Right Hand	M8	14.0	16.0	42.0	303 Stainless Steel
20194369	8x32	Right Hand	M8	14.0	32.0	58.0	303 Stainless Steel
20194376	8x32	Right Hand	M8	14.0	32.0	58.0	303 Stainless Steel
20192266	10x20	Right Hand	M10	18.0	20.0	52.0	303 Stainless Steel
20194383	10x20	Right Hand	M10	18.0	20.0	52.0	303 Stainless Steel
20194390	10x40	Right Hand	M10	18.0	40.0	72.0	303 Stainless Steel
20194406	10x40	Right Hand	M10	18.0	40.0	72.0	303 Stainless Steel
20192273	12x24	Right Hand	M12	20.0	24.0	62.0	303 Stainless Steel
20194413	12x24	Right Hand	M12	20.0	24.0	62.0	303 Stainless Steel
20194420	12x48	Right Hand	M12	20.0	48.0	86.0	303 Stainless Steel
20194437	12x48	Right Hand	M12	20.0	48.0	86.0	303 Stainless Steel

Clevis Joints with Pin

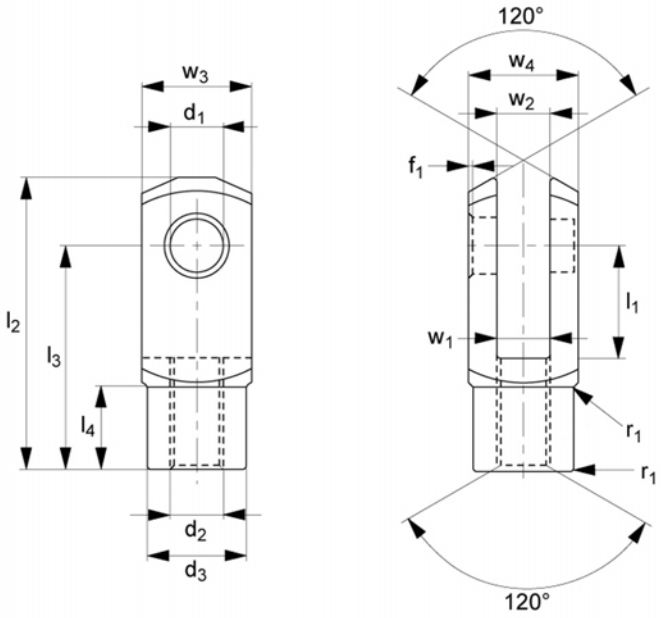



Part Number	Size	Thread hand	d2	d3	l1 ±0.5	l2 ±0.5	Material
20192280	16x32	Right Hand	M16	26.0	32.0	83.0	303 Stainless Steel
20194444	16x32	Right Hand	M16	26.0	32.0	83.0	303 Stainless Steel
20194451	16x64	Right Hand	M16	26.0	64.0	115.0	303 Stainless Steel
20194468	16x64	Right Hand	M16	26.0	64.0	115.0	303 Stainless Steel
20192297	20x40	Right Hand	M20	34.0	40.0	105.0	303 Stainless Steel
20194475	20x40	Right Hand	M20	34.0	40.0	105.0	303 Stainless Steel
20192303	5x10	Left Hand	M5	9.0	10.0	26.0	303 Stainless Steel
20194482	5x20	Left Hand	M5	9.0	20.0	36.0	303 Stainless Steel
20192310	6x12	Left Hand	M6	10.0	12.0	31.0	303 Stainless Steel
20194499	6x24	Left Hand	M6	10.0	24.0	43.0	303 Stainless Steel
20192327	8x16	Left Hand	M8	14.0	16.0	42.0	303 Stainless Steel
20194505	8x16	Left Hand	M8	14.0	16.0	42.0	303 Stainless Steel
20194512	8x32	Left Hand	M8	14.0	32.0	58.0	303 Stainless Steel
20194529	8x32	Left Hand	M8	14.0	32.0	58.0	303 Stainless Steel
20192334	10x20	Left Hand	M10	18.0	20.0	52.0	303 Stainless Steel

Clevis Joints with Pin

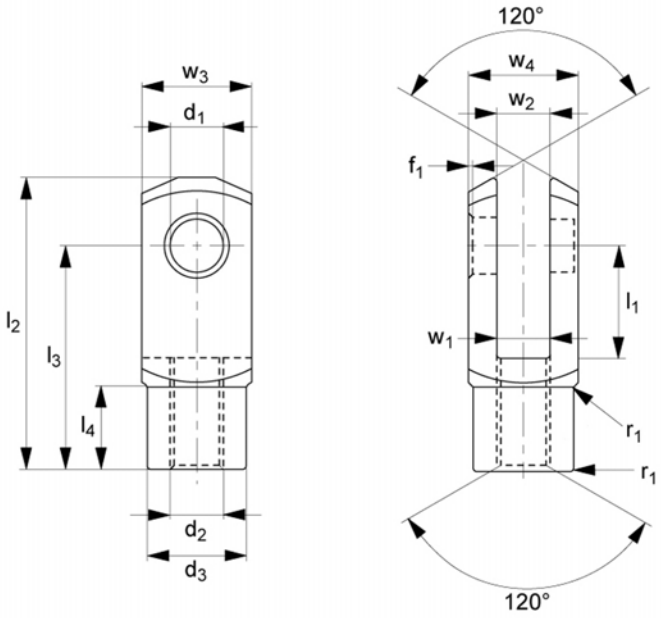



Part Number	Size	Thread hand	d2	d3	l1 ±0.5	l2 ±0.5	Material
20194536	10x20	Left Hand	M10	18.0	20.0	52.0	303 Stainless Steel
20194543	10x40	Left Hand	M10	18.0	40.0	72.0	303 Stainless Steel
20194550	10x40	Left Hand	M10	18.0	40.0	72.0	303 Stainless Steel
20192341	12x24	Left Hand	M12	20.0	24.0	62.0	303 Stainless Steel
20194567	12x24	Left Hand	M12	20.0	24.0	62.0	303 Stainless Steel
20194574	12x48	Left Hand	M12	20.0	48.0	86.0	303 Stainless Steel
20194581	12x48	Left Hand	M12	20.0	48.0	86.0	303 Stainless Steel
20192358	16x32	Left Hand	M16	26.0	32.0	83.0	303 Stainless Steel
20194598	16x32	Left Hand	M16	26.0	32.0	83.0	303 Stainless Steel
20194604	16x64	Left Hand	M16	26.0	64.0	115.0	303 Stainless Steel
20194611	16x64	Left Hand	M16	26.0	64.0	115.0	303 Stainless Steel
20192365	20x40	Left Hand	M20	34.0	40.0	105.0	303 Stainless Steel
20194628	20x40	Left Hand	M20	34.0	40.0	105.0	303 Stainless Steel

Clevis Joints

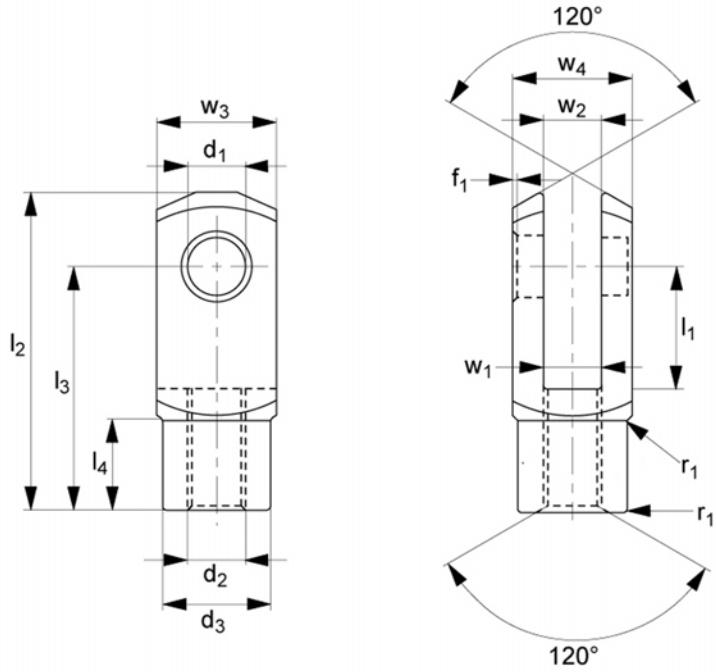



Features

- U-shaped connection between two rods or shafts to facilitate tractive or linear thrust movements.
- It creates a reliable and strong connection while also resisting wear and tear.
- Available in both right and left hand standard thread.

Specifications

Material: 316 Stainless Steel, Igumid G, 303 Stainless Steel, Steel

These Clevis Joints, also known as a fork end or yoke, are a kind of coupling in which the mating parts fit between the forks and are secured in position by clevis pins. They serve as a U-shaped connection between two rods or shafts to facilitate tractive or linear thrust movements.

It is designed to create a reliable and strong connection while also resisting wear and tear. It can handle high loads and stresses, making it appropriate for heavy-duty applications.

They are easy to install and adjust using standard thread. This selection of components includes both right and left hand standard thread. They are most typically employed as a coupling on the end of air cylinders or at each end of a turnbuckle or wire rope for tensioning. Still, they can also be found in various other sectors and applications such as automotive, construction, and manufacturing.

Clevis Joints

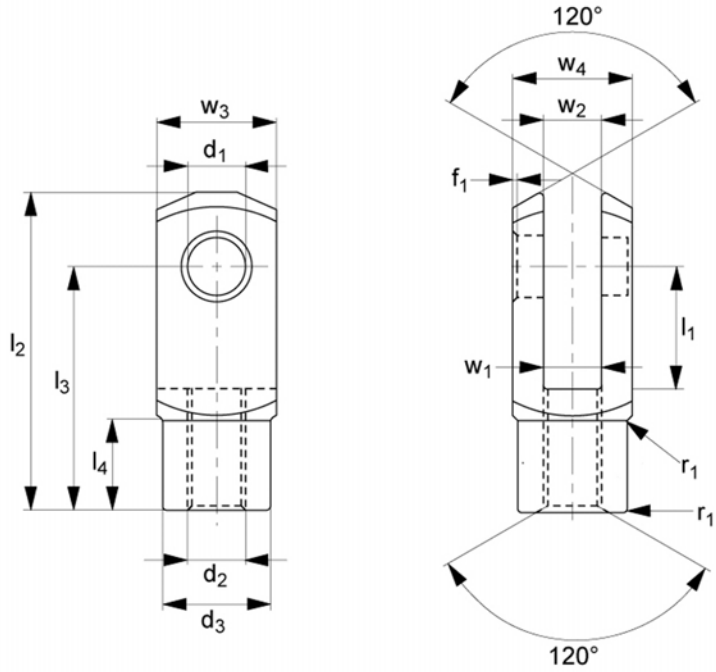



Part Number	Size	Thread hand	Thread Type	d1 tol. H9	l1 ±0.5	Finish	Material
20209339	4x8	Right Hand	Coarse	4.0	8.0	Silver Zinc Plated	Steel
20209346	4x16	Right Hand	Coarse	4.0	16.0	Silver Zinc Plated	Steel
20209353	5x10	Right Hand	Coarse	5.0	10.0	Silver Zinc Plated	Steel
20209360	5x20	Right Hand	Coarse	5.0	20.0	Silver Zinc Plated	Steel
20209377	6x12	Right Hand	Coarse	6.0	12.0	Silver Zinc Plated	Steel
20209384	6x24	Right Hand	Coarse	6.0	24.0	Silver Zinc Plated	Steel
20209391	8x16	Right Hand	Coarse	8.0	16.0	Silver Zinc Plated	Steel
20209407	8x16	Right Hand	Fine	8.0	16.0	Silver Zinc Plated	Steel
20209414	8x32	Right Hand	Coarse	8.0	32.0	Silver Zinc Plated	Steel
20209421	8x32	Right Hand	Fine	8.0	32.0	Silver Zinc Plated	Steel
20209438	10x20	Right Hand	Coarse	10.0	20.0	Silver Zinc Plated	Steel
20209445	10x20	Right Hand	Fine	10.0	20.0	Silver Zinc Plated	Steel
20209452	10x40	Right Hand	Coarse	10.0	40.0	Silver Zinc Plated	Steel
20209469	10x40	Right Hand	Fine	10.0	40.0	Silver Zinc Plated	Steel
20209476	12x24	Right Hand	Coarse	12.0	24.0	Silver Zinc Plated	Steel

Clevis Joints

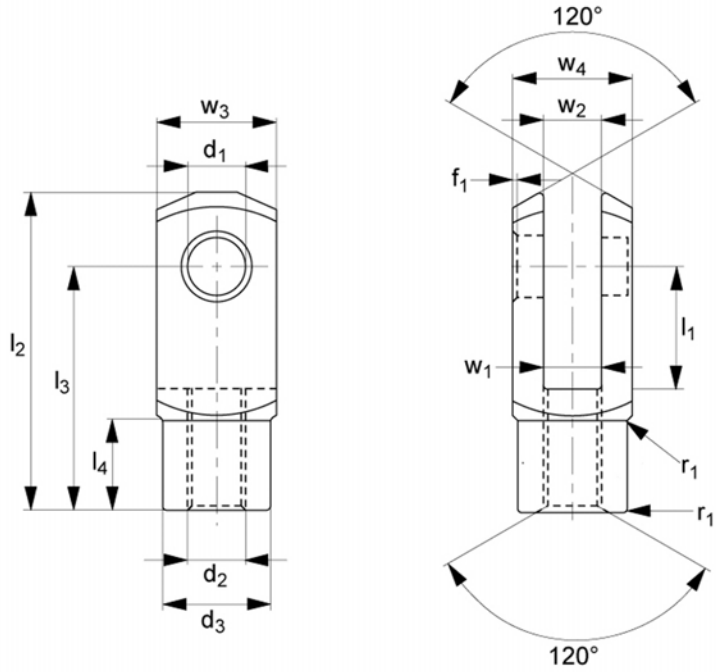



Part Number	Size	Thread hand	Thread Type	d1 tol. H9	l1 ±0.5	Finish	Material
20209483	12x24	Right Hand	Fine	12.0	24.0	Silver Zinc Plated	Steel
20209490	12x48	Right Hand	Coarse	12.0	48.0	Silver Zinc Plated	Steel
20209506	12x48	Right Hand	Fine	12.0	48.0	Silver Zinc Plated	Steel
20209513	14x28	Right Hand	Coarse	14.0	28.0	Silver Zinc Plated	Steel
20209520	14x28	Right Hand	Fine	14.0	28.0	Silver Zinc Plated	Steel
20209537	14x56	Right Hand	Coarse	14.0	56.0	Silver Zinc Plated	Steel
20209544	14x56	Right Hand	Fine	14.0	56.0	Silver Zinc Plated	Steel
20209551	16x32	Right Hand	Coarse	16.0	32.0	Silver Zinc Plated	Steel
20209568	16x32	Right Hand	Fine	16.0	32.0	Silver Zinc Plated	Steel
20209575	16x64	Right Hand	Coarse	16.0	64.0	Silver Zinc Plated	Steel
20209582	16x64	Right Hand	Fine	16.0	64.0	Silver Zinc Plated	Steel
20209599	18x36	Right Hand	Coarse	18.0	36.0	Silver Zinc Plated	Steel
20209605	18x36	Right Hand	Fine	18.0	36.0	Silver Zinc Plated	Steel
20209612	20x40	Right Hand	Coarse	20.0	40.0	Silver Zinc Plated	Steel
20209629	20x40	Right Hand	Fine	20.0	40.0	Silver Zinc Plated	Steel

Clevis Joints

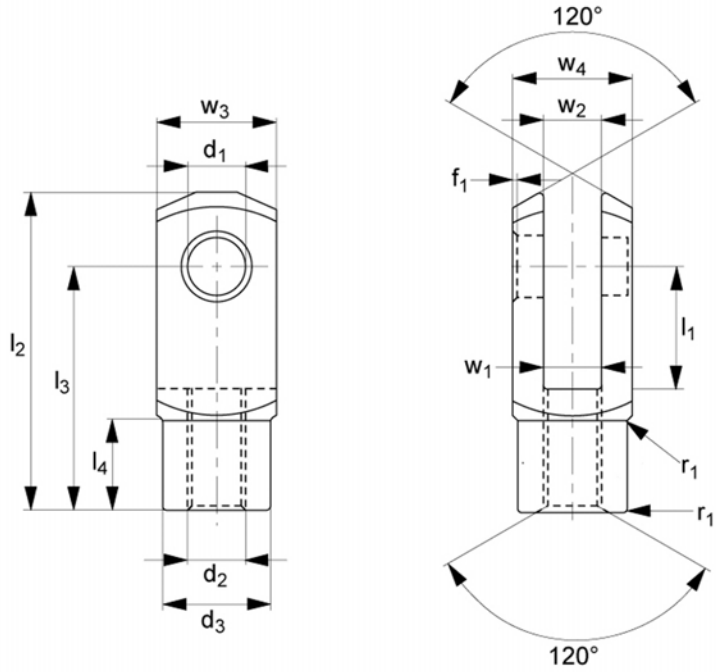



Part Number	Size	Thread hand	Thread Type	d1 tol. H9	l1 ±0.5	Finish	Material
20209636	20x80	Right Hand	Coarse	20.0	80.0	Silver Zinc Plated	Steel
20209643	20x80	Right Hand	Fine	20.0	80.0	Silver Zinc Plated	Steel
20209650	25x50	Right Hand	Coarse	25.0	50.0	Silver Zinc Plated	Steel
20209667	25x50	Right Hand	Fine	25.0	50.0	Silver Zinc Plated	Steel
20209674	28x56	Right Hand	Coarse	28.0	56.0	Silver Zinc Plated	Steel
20209681	28x56	Right Hand	Fine	28.0	56.0	Silver Zinc Plated	Steel
20209698	30x54	Right Hand	Fine	30.0	54.0	Silver Zinc Plated	Steel
20209704	30x60	Right Hand	Coarse	30.0	60.0	Silver Zinc Plated	Steel
20209711	30x60	Right Hand	Fine	30.0	60.0	Silver Zinc Plated	Steel
20209728	35x54	Right Hand	Fine	35.0	54.0	Silver Zinc Plated	Steel
20209735	35x72	Right Hand	Coarse	35.0	72.0	Silver Zinc Plated	Steel
20209742	35x72	Right Hand	Fine	35.0	72.0	Silver Zinc Plated	Steel
20209759	36x72	Right Hand	Coarse	35.0	72.0	Silver Zinc Plated	Steel
20209766	36x72	Right Hand	Fine	35.0	72.0	Silver Zinc Plated	Steel
20209773	40x84	Right Hand	Fine	40.0	84.0	Silver Zinc Plated	Steel

Clevis Joints

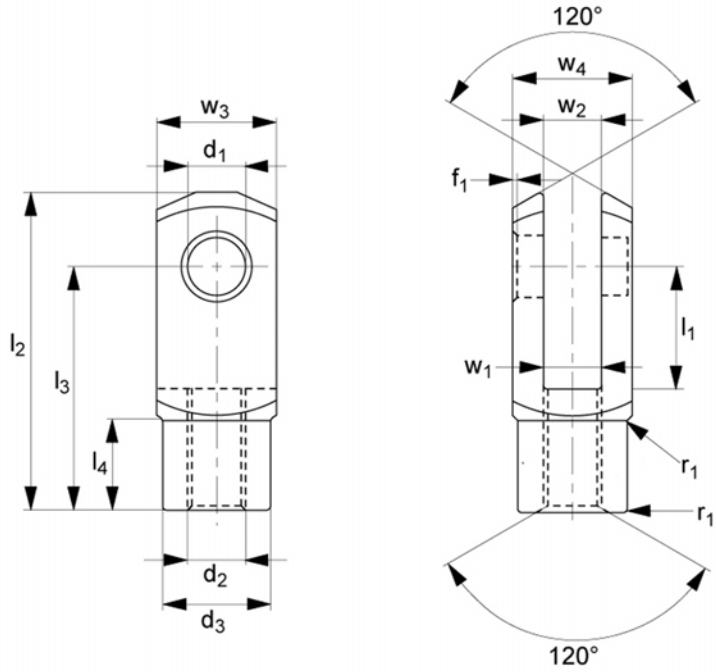



Part Number	Size	Thread hand	Thread Type	d1 tol. H9	l1 ±0.5	Finish	Material
20209780	42x84	Right Hand	Coarse	42.0	84.0	Silver Zinc Plated	Steel
20209797	42x84	Right Hand	Fine	42.0	84.0	Silver Zinc Plated	Steel
20209803	50x96	Right Hand	Coarse	50.0	96.0	Silver Zinc Plated	Steel
20209810	50x96	Right Hand	Fine	50.0	96.0	Silver Zinc Plated	Steel
20209827	4x8	Left Hand	Coarse	4.0	8.0	Silver Zinc Plated	Steel
20209834	4x16	Left Hand	Coarse	4.0	16.0	Silver Zinc Plated	Steel
20209841	5x10	Left Hand	Coarse	5.0	10.0	Silver Zinc Plated	Steel
20209858	5x20	Left Hand	Coarse	5.0	20.0	Silver Zinc Plated	Steel
20209865	6x12	Left Hand	Coarse	6.0	12.0	Silver Zinc Plated	Steel
20209872	6x24	Left Hand	Coarse	6.0	24.0	Silver Zinc Plated	Steel
20209889	8x16	Left Hand	Coarse	8.0	16.0	Silver Zinc Plated	Steel
20209896	8x16	Left Hand	Fine	8.0	16.0	Silver Zinc Plated	Steel
20209902	8x32	Left Hand	Coarse	8.0	32.0	Silver Zinc Plated	Steel
20209919	8x32	Left Hand	Fine	8.0	32.0	Silver Zinc Plated	Steel
20209926	10x20	Left Hand	Coarse	10.0	20.0	Silver Zinc Plated	Steel

Clevis Joints

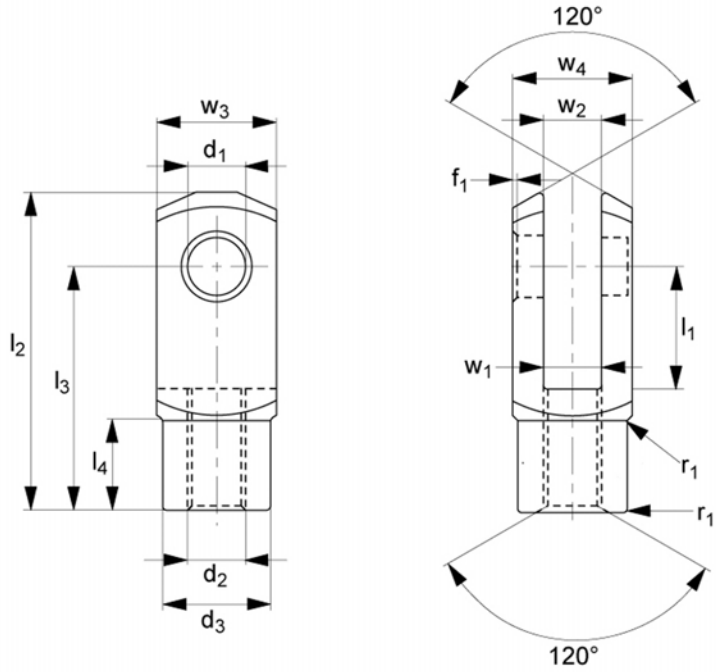



Part Number	Size	Thread hand	Thread Type	d1 tol. H9	l1 ±0.5	Finish	Material
20209933	10x20	Left Hand	Fine	10.0	20.0	Silver Zinc Plated	Steel
20209940	10x40	Left Hand	Coarse	10.0	40.0	Silver Zinc Plated	Steel
20209957	10x40	Left Hand	Fine	10.0	40.0	Silver Zinc Plated	Steel
20209964	12x24	Left Hand	Coarse	12.0	24.0	Silver Zinc Plated	Steel
20209971	12x24	Left Hand	Fine	12.0	24.0	Silver Zinc Plated	Steel
20209988	12x48	Left Hand	Coarse	12.0	48.0	Silver Zinc Plated	Steel
20209995	12x48	Left Hand	Fine	12.0	48.0	Silver Zinc Plated	Steel
20210007	14x28	Left Hand	Coarse	14.0	28.0	Silver Zinc Plated	Steel
20210014	14x28	Left Hand	Fine	14.0	28.0	Silver Zinc Plated	Steel
20210021	14x56	Left Hand	Coarse	14.0	56.0	Silver Zinc Plated	Steel
20210038	14x56	Left Hand	Fine	14.0	56.0	Silver Zinc Plated	Steel
20210045	16x32	Left Hand	Coarse	16.0	32.0	Silver Zinc Plated	Steel
20210052	16x32	Left Hand	Fine	16.0	32.0	Silver Zinc Plated	Steel
20210069	16x64	Left Hand	Coarse	16.0	64.0	Silver Zinc Plated	Steel
20210076	16x64	Left Hand	Fine	16.0	64.0	Silver Zinc Plated	Steel

Clevis Joints

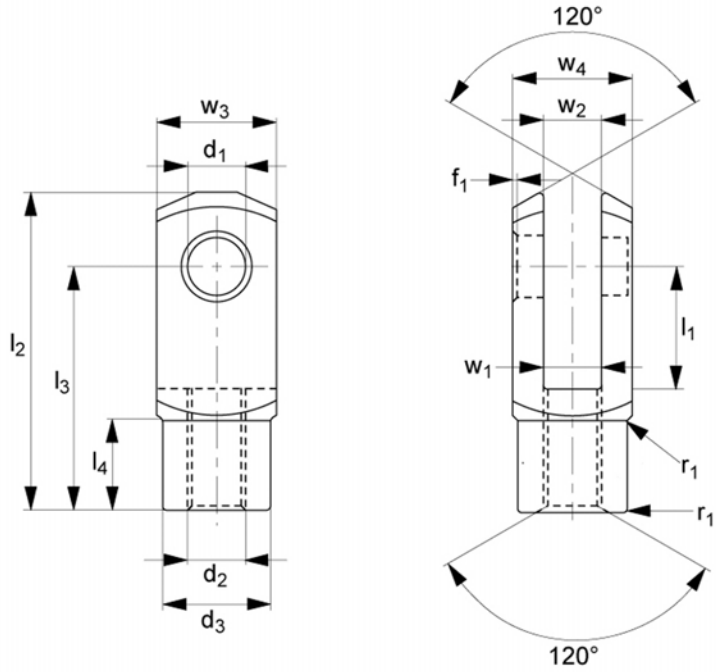



Part Number	Size	Thread hand	Thread Type	d1 tol. H9	l1 ±0.5	Finish	Material
20210083	18x36	Left Hand	Coarse	18.0	36.0	Silver Zinc Plated	Steel
20210090	18x36	Left Hand	Fine	18.0	36.0	Silver Zinc Plated	Steel
20210106	20x40	Left Hand	Coarse	20.0	40.0	Silver Zinc Plated	Steel
20210113	20x40	Left Hand	Fine	20.0	40.0	Silver Zinc Plated	Steel
20210120	20x80	Left Hand	Coarse	20.0	80.0	Silver Zinc Plated	Steel
20210137	20x80	Left Hand	Fine	20.0	80.0	Silver Zinc Plated	Steel
20210144	25x50	Left Hand	Coarse	25.0	50.0	Silver Zinc Plated	Steel
20210151	25x50	Left Hand	Fine	25.0	50.0	Silver Zinc Plated	Steel
20210168	28x56	Left Hand	Coarse	28.0	56.0	Silver Zinc Plated	Steel
20210175	28x56	Left Hand	Fine	28.0	56.0	Silver Zinc Plated	Steel
20210182	30x54	Left Hand	Fine	30.0	54.0	Silver Zinc Plated	Steel
20210199	30x60	Left Hand	Coarse	30.0	60.0	Silver Zinc Plated	Steel
20210205	30x60	Left Hand	Fine	30.0	60.0	Silver Zinc Plated	Steel
20210212	35x54	Left Hand	Fine	35.0	54.0	Silver Zinc Plated	Steel
20210229	35x72	Left Hand	Coarse	35.0	72.0	Silver Zinc Plated	Steel

Clevis Joints

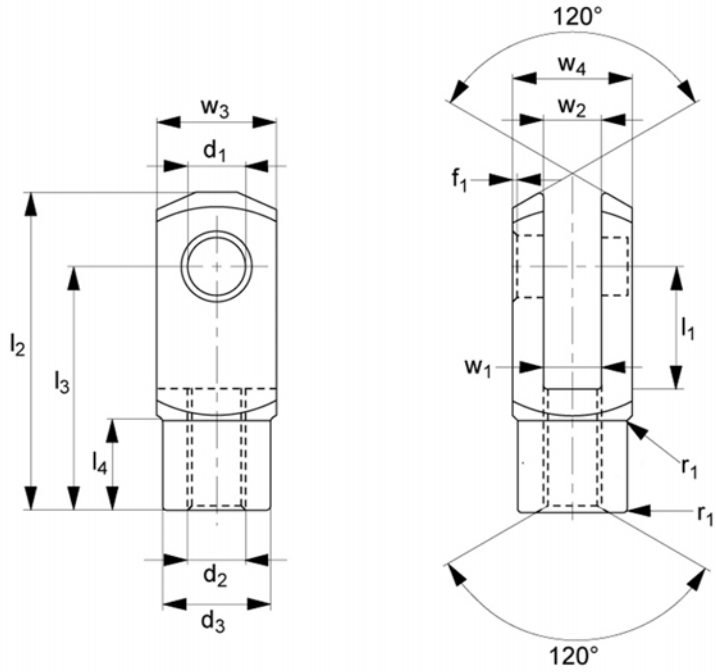



Part Number	Size	Thread hand	Thread Type	d1 tol. H9	l1 ±0.5	Finish	Material
20210236	35x72	Left Hand	Fine	35.0	72.0	Silver Zinc Plated	Steel
20210243	36x72	Left Hand	Coarse	35.0	72.0	Silver Zinc Plated	Steel
20210250	36x72	Left Hand	Fine	35.0	72.0	Silver Zinc Plated	Steel
20210267	40x84	Left Hand	Fine	40.0	84.0	Silver Zinc Plated	Steel
20210274	42x84	Left Hand	Coarse	42.0	84.0	Silver Zinc Plated	Steel
20210281	42x84	Left Hand	Fine	42.0	84.0	Silver Zinc Plated	Steel
20210298	50x96	Left Hand	Coarse	50.0	96.0	Silver Zinc Plated	Steel
20210304	50x96	Left Hand	Fine	50.0	96.0	Silver Zinc Plated	Steel
20210311	4x8	Right Hand	Coarse	4.0	8.0	Stainless Steel	303 Stainless Steel
20210328	4x16	Right Hand	Coarse	4.0	16.0	Stainless Steel	303 Stainless Steel
20210335	5x10	Right Hand	Coarse	5.0	10.0	Stainless Steel	303 Stainless Steel
20210342	5x20	Right Hand	Coarse	5.0	20.0	Stainless Steel	303 Stainless Steel
20210359	6x12	Right Hand	Coarse	6.0	12.0	Stainless Steel	303 Stainless Steel
20210366	6x24	Right Hand	Coarse	6.0	24.0	Stainless Steel	303 Stainless Steel
20210373	8x16	Right Hand	Coarse	8.0	16.0	Stainless Steel	303 Stainless Steel

Clevis Joints

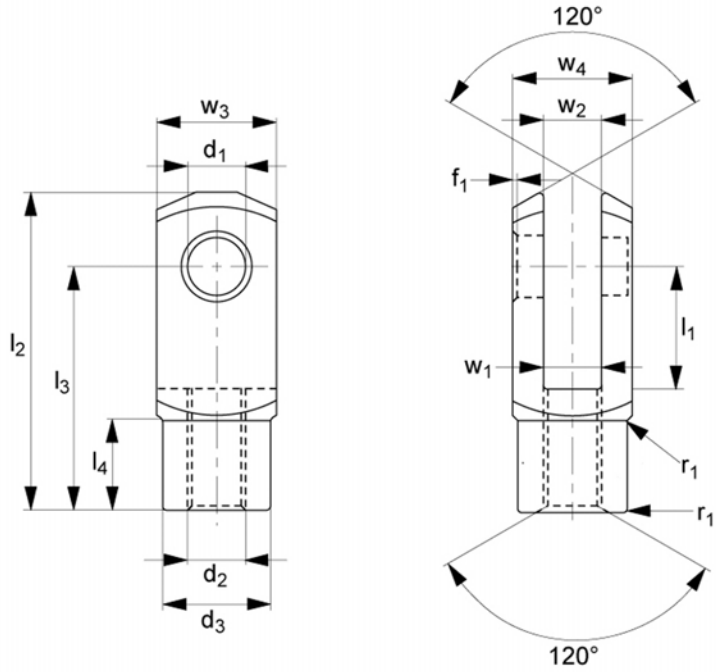



Part Number	Size	Thread hand	Thread Type	d1 tol. H9	l1 ±0.5	Finish	Material
20210380	8x16	Right Hand	Fine	8.0	16.0	Stainless Steel	303 Stainless Steel
20210397	8x32	Right Hand	Coarse	8.0	32.0	Stainless Steel	303 Stainless Steel
20210403	8x32	Right Hand	Fine	8.0	32.0	Stainless Steel	303 Stainless Steel
20210410	10x20	Right Hand	Coarse	10.0	20.0	Stainless Steel	303 Stainless Steel
20210427	10x20	Right Hand	Fine	10.0	20.0	Stainless Steel	303 Stainless Steel
20210434	10x40	Right Hand	Coarse	10.0	40.0	Stainless Steel	303 Stainless Steel
20210441	10x40	Right Hand	Fine	10.0	40.0	Stainless Steel	303 Stainless Steel
20210458	12x24	Right Hand	Coarse	12.0	24.0	Stainless Steel	303 Stainless Steel
20210465	12x24	Right Hand	Fine	12.0	24.0	Stainless Steel	303 Stainless Steel
20210472	12x48	Right Hand	Coarse	12.0	48.0	Stainless Steel	303 Stainless Steel
20210489	12x48	Right Hand	Fine	12.0	48.0	Stainless Steel	303 Stainless Steel
20210496	14x28	Right Hand	Coarse	14.0	28.0	Stainless Steel	303 Stainless Steel
20210502	14x28	Right Hand	Fine	14.0	28.0	Stainless Steel	303 Stainless Steel
20210519	14x56	Right Hand	Coarse	14.0	56.0	Stainless Steel	303 Stainless Steel
20210526	14x56	Right Hand	Fine	14.0	56.0	Stainless Steel	303 Stainless Steel

Clevis Joints

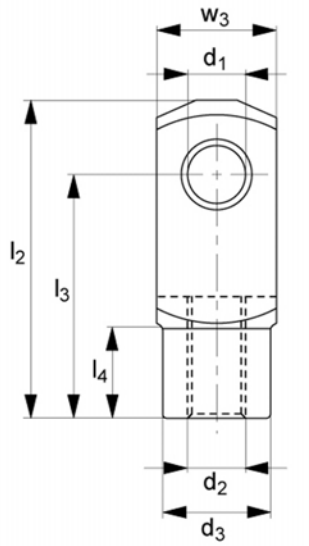

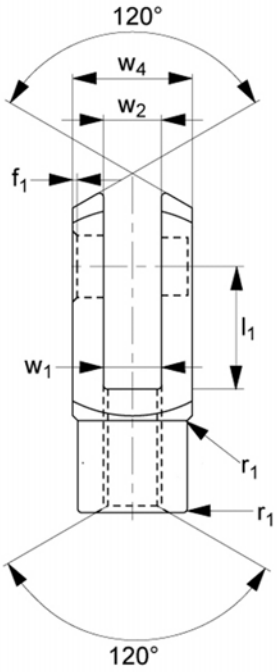



Part Number	Size	Thread hand	Thread Type	d1 tol. H9	l1 ±0.5	Finish	Material
20210533	16x32	Right Hand	Coarse	16.0	32.0	Stainless Steel	303 Stainless Steel
20210540	16x32	Right Hand	Fine	16.0	32.0	Stainless Steel	303 Stainless Steel
20210557	16x64	Right Hand	Coarse	16.0	64.0	Stainless Steel	303 Stainless Steel
20210564	16x64	Right Hand	Fine	16.0	64.0	Stainless Steel	303 Stainless Steel
20210571	20x40	Right Hand	Coarse	20.0	40.0	Stainless Steel	303 Stainless Steel
20210588	20x40	Right Hand	Fine	20.0	40.0	Stainless Steel	303 Stainless Steel
20210595	25x50	Right Hand	Coarse	25.0	50.0	Stainless Steel	303 Stainless Steel
20210601	25x50	Right Hand	Fine	25.0	50.0	Stainless Steel	303 Stainless Steel
20210618	30x54	Right Hand	Fine	30.0	54.0	Stainless Steel	303 Stainless Steel
20210625	4x8	Left Hand	Coarse	4.0	8.0	Stainless Steel	303 Stainless Steel
20210632	4x16	Left Hand	Coarse	4.0	16.0	Stainless Steel	303 Stainless Steel
20210649	5x10	Left Hand	Coarse	5.0	10.0	Stainless Steel	303 Stainless Steel
20210656	5x20	Left Hand	Coarse	5.0	20.0	Stainless Steel	303 Stainless Steel
20210663	6x12	Left Hand	Coarse	6.0	12.0	Stainless Steel	303 Stainless Steel
20210670	6x24	Left Hand	Coarse	6.0	24.0	Stainless Steel	303 Stainless Steel

Clevis Joints

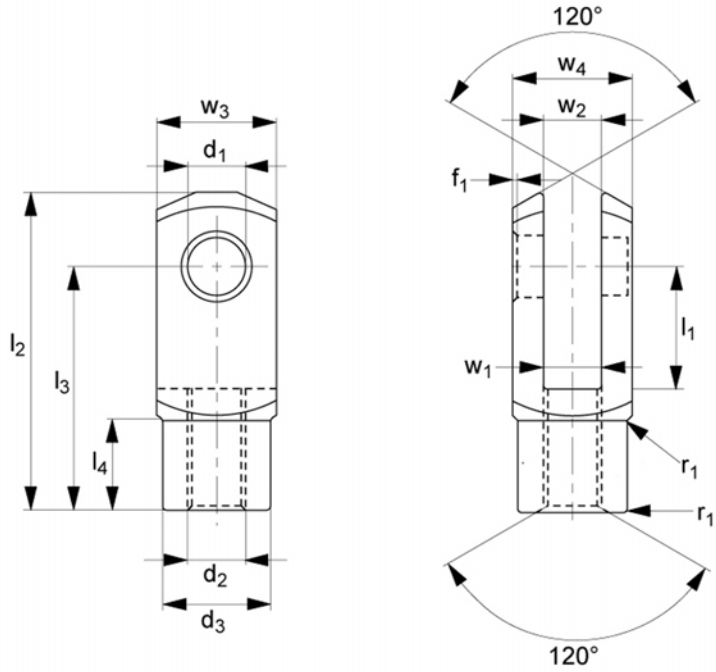



Part Number	Size	Thread hand	Thread Type	d1 tol. H9	l1 ±0.5	Finish	Material
20210687	8x16	Left Hand	Coarse	8.0	16.0	Stainless Steel	303 Stainless Steel
20210694	8x16	Left Hand	Fine	8.0	16.0	Stainless Steel	303 Stainless Steel
20210700	8x32	Left Hand	Coarse	8.0	32.0	Stainless Steel	303 Stainless Steel
20210717	8x32	Left Hand	Fine	8.0	32.0	Stainless Steel	303 Stainless Steel
20210724	10x20	Left Hand	Coarse	10.0	20.0	Stainless Steel	303 Stainless Steel
20210731	10x20	Left Hand	Fine	10.0	20.0	Stainless Steel	303 Stainless Steel
20210748	10x40	Left Hand	Coarse	10.0	40.0	Stainless Steel	303 Stainless Steel
20210755	10x40	Left Hand	Fine	10.0	40.0	Stainless Steel	303 Stainless Steel
20210762	12x24	Left Hand	Coarse	12.0	24.0	Stainless Steel	303 Stainless Steel
20210779	12x24	Left Hand	Fine	12.0	24.0	Stainless Steel	303 Stainless Steel
20210786	12x48	Left Hand	Coarse	12.0	48.0	Stainless Steel	303 Stainless Steel
20210793	12x48	Left Hand	Fine	12.0	48.0	Stainless Steel	303 Stainless Steel
20210809	14x28	Left Hand	Coarse	14.0	28.0	Stainless Steel	303 Stainless Steel
20210816	14x28	Left Hand	Fine	14.0	28.0	Stainless Steel	303 Stainless Steel
20210823	14x56	Left Hand	Coarse	14.0	56.0	Stainless Steel	303 Stainless Steel

Clevis Joints

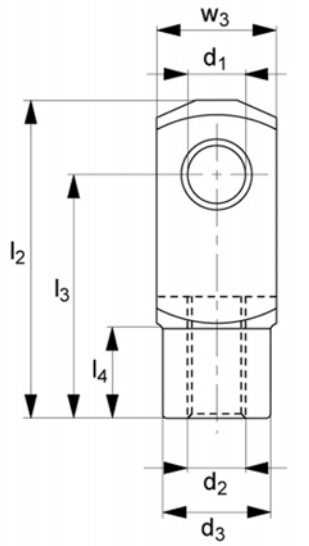

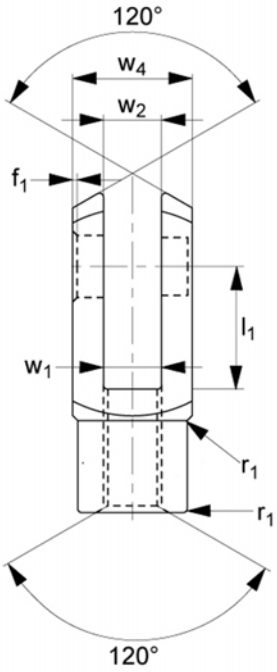



Part Number	Size	Thread hand	Thread Type	d1 tol. H9	l1 ±0.5	Finish	Material
20210830	14x56	Left Hand	Fine	14.0	56.0	Stainless Steel	303 Stainless Steel
20210847	16x32	Left Hand	Coarse	16.0	32.0	Stainless Steel	303 Stainless Steel
20210854	16x32	Left Hand	Fine	16.0	32.0	Stainless Steel	303 Stainless Steel
20210861	16x64	Left Hand	Coarse	16.0	64.0	Stainless Steel	303 Stainless Steel
20210878	16x64	Left Hand	Fine	16.0	64.0	Stainless Steel	303 Stainless Steel
20210885	20x40	Left Hand	Coarse	20.0	40.0	Stainless Steel	303 Stainless Steel
20210892	20x40	Left Hand	Fine	20.0	40.0	Stainless Steel	303 Stainless Steel
20210908	25x50	Left Hand	Coarse	25.0	50.0	Stainless Steel	303 Stainless Steel
20210915	25x50	Left Hand	Fine	25.0	50.0	Stainless Steel	303 Stainless Steel
20210922	30x54	Left Hand	Fine	30.0	54.0	Stainless Steel	303 Stainless Steel
20210939	4x8	Right Hand	Coarse	4.0	8.0	Blackened	Igumid G
20210946	4x8	Right Hand	Coarse	4.0	8.0	Blackened	Igumid G
20210953	5x10	Right Hand	Coarse	5.0	10.0	Blackened	Igumid G
20210960	5x12	Right Hand	Coarse	5.0	12.0	Blackened	Igumid G
20210977	6x12	Right Hand	Coarse	6.0	12.0	Blackened	Igumid G
20210984	8x16	Right Hand	Coarse	8.0	16.0	Blackened	Igumid G

Clevis Joints

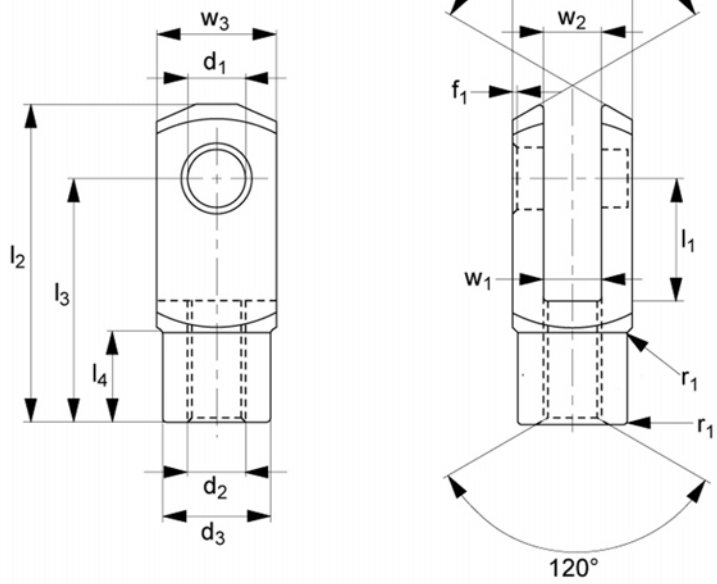



Part Number	Size	Thread hand	Thread Type	d1 tol. H9	l1 ±0.5	Finish	Material
20210991	10x20	Right Hand	Coarse	10.0	20.0	Blackened	Igumid G
20211004	10x20	Right Hand	Fine	10.0	20.0	Blackened	Igumid G
20211011	12x24	Right Hand	Coarse	12.0	24.0	Blackened	Igumid G
20211028	12x24	Right Hand	Fine	12.0	24.0	Blackened	Igumid G
20211035	14x28	Right Hand	Coarse	14.0	28.0	Blackened	Igumid G
20211042	15x28	Right Hand	Coarse	15.0	28.0	Blackened	Igumid G
20211059	16x32	Right Hand	Coarse	16.0	32.0	Blackened	Igumid G
20211066	16x32	Right Hand	Fine	16.0	32.0	Blackened	Igumid G
20211073	17x32	Right Hand	Coarse	17.0	32.0	Blackened	Igumid G
20211080	17x32	Right Hand	Fine	17.0	32.0	Blackened	Igumid G
20211097	20x40	Right Hand	Fine	20.0	40.0	Blackened	Igumid G
20211103	20x40	Right Hand	Fine	20.0	40.0	Blackened	Igumid G
20211110	4x8	Left Hand	Coarse	4.0	8.0	Blackened	Igumid G
20211127	4x8	Left Hand	Coarse	4.0	8.0	Blackened	Igumid G
20211134	5x10	Left Hand	Coarse	5.0	10.0	Blackened	Igumid G
20211141	5x12	Left Hand	Coarse	5.0	12.0	Blackened	Igumid G
20211158	6x12	Left Hand	Coarse	6.0	12.0	Blackened	Igumid G
20211165	8x16	Left Hand	Coarse	8.0	16.0	Blackened	Igumid G

Clevis Joints

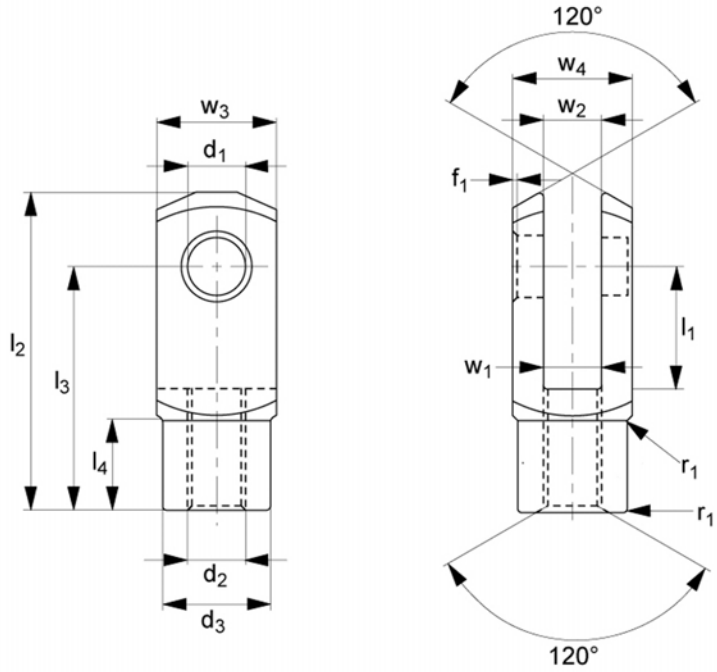



Part Number	Size	Thread hand	Thread Type	d1 tol. H9	l1 ±0.5	Finish	Material
20211172	10x20	Left Hand	Coarse	10.0	20.0	Blackened	Igumid G
20211189	10x20	Left Hand	Fine	10.0	20.0	Blackened	Igumid G
20211196	12x24	Left Hand	Coarse	12.0	24.0	Blackened	Igumid G
20211202	12x24	Left Hand	Fine	12.0	24.0	Blackened	Igumid G
20211219	14x28	Left Hand	Coarse	14.0	28.0	Blackened	Igumid G
20211226	15x28	Left Hand	Coarse	15.0	28.0	Blackened	Igumid G
20211233	16x32	Left Hand	Coarse	16.0	32.0	Blackened	Igumid G
20211240	16x32	Left Hand	Fine	16.0	32.0	Blackened	Igumid G
20211257	17x32	Left Hand	Coarse	17.0	32.0	Blackened	Igumid G
20211264	17x32	Left Hand	Fine	17.0	32.0	Blackened	Igumid G
20211271	20x40	Left Hand	Fine	20.0	40.0	Blackened	Igumid G
20211288	20x40	Left Hand	Fine	20.0	40.0	Blackened	Igumid G
20217327	4x8	Right Hand	Coarse	4.0	8.0	Stainless Steel	316 Stainless Steel
20217334	5x10	Right Hand	Coarse	5.0	10.0	Stainless Steel	316 Stainless Steel
20217341	6x12	Right Hand	Coarse	6.0	12.0	Stainless Steel	316 Stainless Steel
20217358	8x16	Right Hand	Coarse	8.0	16.0	Stainless Steel	316 Stainless Steel
20217365	8x32	Right Hand	Coarse	8.0	32.0	Stainless Steel	316 Stainless Steel

Clevis Joints

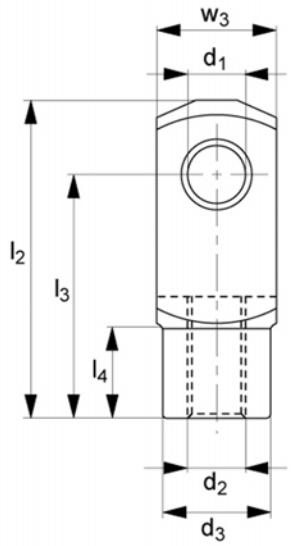

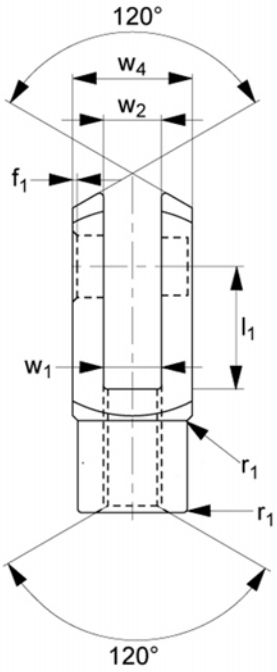



Part Number	Size	Thread hand	Thread Type	d1 tol. H9	l1 ±0.5	Finish	Material
20217372	10x20	Right Hand	Coarse	10.0	20.0	Stainless Steel	316 Stainless Steel
20217389	10x40	Right Hand	Coarse	10.0	40.0	Stainless Steel	316 Stainless Steel
20217396	12x24	Right Hand	Coarse	12.0	24.0	Stainless Steel	316 Stainless Steel
20217402	14x28	Right Hand	Coarse	14.0	28.0	Stainless Steel	316 Stainless Steel
20217419	16x32	Right Hand	Coarse	16.0	32.0	Stainless Steel	316 Stainless Steel
20217426	20x40	Right Hand	Coarse	20.0	40.0	Stainless Steel	316 Stainless Steel

Clevis Joints with Retention Clips

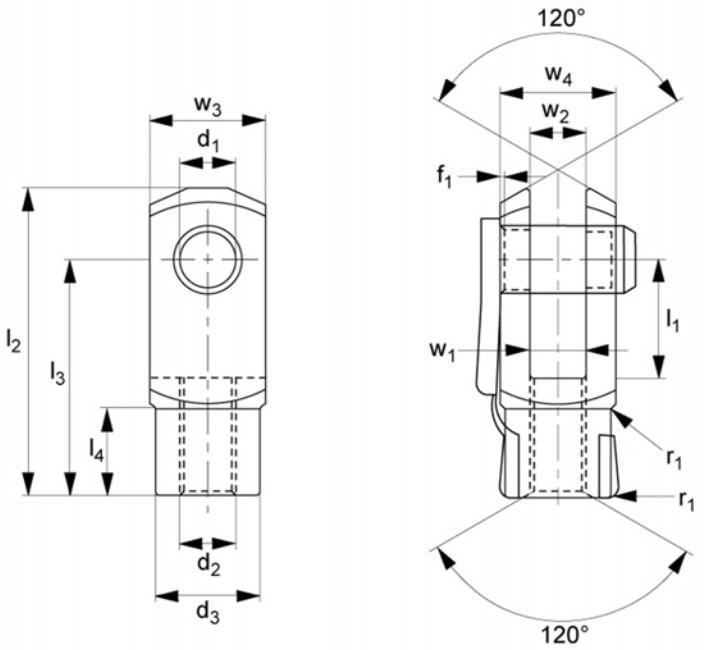



Features

- U-shaped connection between two rods or shafts to allow for tractive or linear thrust movements.
- Steel material ensures its longevity and ability to endure high forces, as well as resistance to wear and corrosion.
- Joint can be dismantled for maintenance by removing the retention clip, allowing for component examination, lubrication, or replacement.

Specifications

Material: Steel

These Steel Clevis Joints with Retention Clips are a type of coupling in which the matching parts fit between the forks and are held in place by retention clips. They form a U-shaped connection between two rods or shafts to allow for tractive or linear thrust movements.

The retention clip is a clip that locks in place around the base of the clevis preventing accidental disconnection, resulting in a clean, compact assembly. The steel substance ensures its longevity and ability to endure high forces, as well as resistance to wear and corrosion. If necessary, the joint can be dismantled for maintenance by removing the retention clip. This allows for component examination, lubrication, or replacement.

They are easy to install and adjust using standard thread. They are most typically employed as a coupling on the end of air cylinders or at each end of a turnbuckle or wire rope for tensioning, as well as in industries such as construction, automotive and manufacturing.

Clevis Joints with Retention Clips

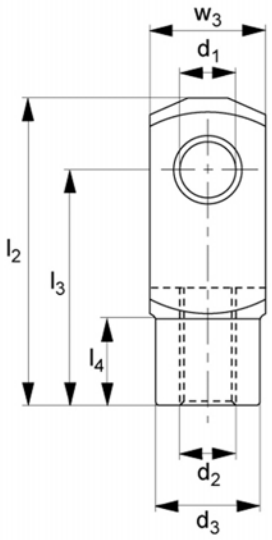

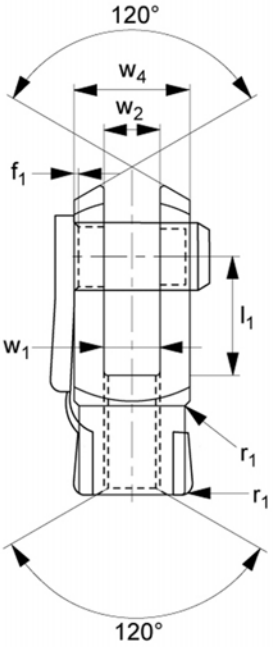



Part Number	Size	Thread hand	Thread Type	d1 tol. H9	d2	d3	l1 ±0.5
20215521	4x8	Right Hand	Coarse	4.0	M4	8.0	8.0
20215538	5x10	Right Hand	Coarse	5.0	M5	9.0	10.0
20215545	5x20	Right Hand	Coarse	5.0	M5	9.0	20.0
20215552	6x12	Right Hand	Coarse	6.0	M6	10.0	12.0
20215569	6x24	Right Hand	Coarse	6.0	M6	10.0	24.0
20215576	8x16	Right Hand	Coarse	8.0	M8	14.0	16.0
20215583	8x16	Right Hand	Fine	8.0	M8	14.0	16.0
20215590	8x32	Right Hand	Coarse	8.0	M8	14.0	32.0
20215606	8x32	Right Hand	Fine	8.0	M8	14.0	32.0
20215613	10x20	Right Hand	Coarse	10.0	M10	18.0	20.0
20215620	10x20	Right Hand	Fine	10.0	M10	18.0	20.0
20215637	10x40	Right Hand	Coarse	10.0	M10	18.0	40.0
20215644	10x40	Right Hand	Fine	10.0	M10	18.0	40.0
20215651	12x24	Right Hand	Coarse	12.0	M12	20.0	24.0
20215668	12x24	Right Hand	Fine	12.0	M12	20.0	24.0
20215675	12x48	Right Hand	Coarse	12.0	M12	20.0	48.0
20215682	12x48	Right Hand	Fine	12.0	M12	20.0	48.0
20215699	14x28	Right Hand	Coarse	14.0	M14	24.0	28.0

Clevis Joints with Retention Clips

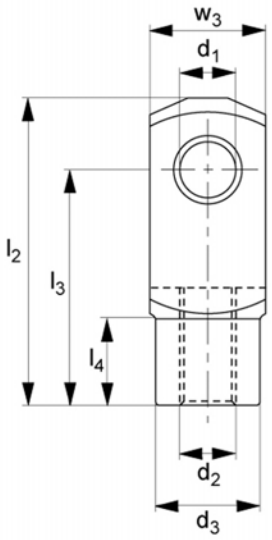

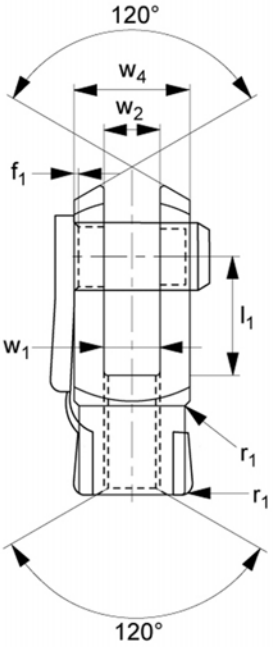



Part Number	Size	Thread hand	Thread Type	d1 tol. H9	d2	d3	l1 ±0.5
20215705	14x28	Right Hand	Fine	14.0	M14	24.0	28.0
20215712	14x56	Right Hand	Coarse	14.0	M14	24.0	56.0
20215729	14x56	Right Hand	Fine	14.0	M14	24.0	56.0
20215736	16x32	Right Hand	Coarse	16.0	M16	26.0	32.0
20215743	16x32	Right Hand	Fine	16.0	M16	26.0	32.0
20215750	16x64	Right Hand	Coarse	16.0	M16	26.0	64.0
20215767	16x64	Right Hand	Fine	16.0	M16	26.0	64.0
20215774	20x40	Right Hand	Coarse	20.0	M20	34.0	40.0
20215781	20x40	Right Hand	Fine	20.0	M20	34.0	40.0
20215798	4x8	Left Hand	Coarse	4.0	M4	8.0	8.0
20215804	5x10	Left Hand	Coarse	5.0	M5	9.0	10.0
20215811	5x20	Left Hand	Coarse	5.0	M5	9.0	20.0
20215828	6x12	Left Hand	Coarse	6.0	M6	10.0	12.0
20215835	6x24	Left Hand	Coarse	6.0	M6	10.0	24.0
20215842	8x16	Left Hand	Coarse	8.0	M8	14.0	16.0
20215859	8x16	Left Hand	Fine	8.0	M8	14.0	16.0
20215866	8x32	Left Hand	Coarse	8.0	M8	14.0	32.0
20215873	8x32	Left Hand	Fine	8.0	M8	14.0	32.0

Clevis Joints with Retention Clips

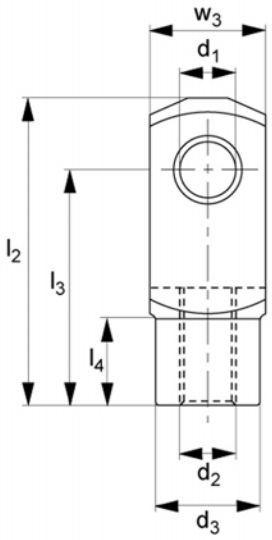

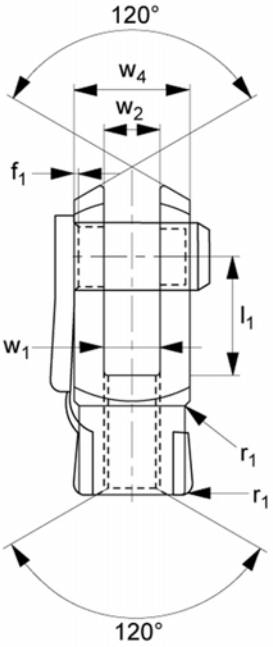



Part Number	Size	Thread hand	Thread Type	d1 tol. H9	d2	d3	l1 ±0.5
20215880	10x20	Left Hand	Coarse	10.0	M10	18.0	20.0
20215897	10x20	Left Hand	Fine	10.0	M10	18.0	20.0
20215903	10x40	Left Hand	Coarse	10.0	M10	18.0	40.0
20215910	10x40	Left Hand	Fine	10.0	M10	18.0	40.0
20215927	12x24	Left Hand	Coarse	12.0	M12	20.0	24.0
20215934	12x24	Left Hand	Fine	12.0	M12	20.0	24.0
20215941	12x48	Left Hand	Coarse	12.0	M12	20.0	48.0
20215958	12x48	Left Hand	Fine	12.0	M12	20.0	48.0
20215965	14x28	Left Hand	Coarse	14.0	M14	24.0	28.0
20215972	14x28	Left Hand	Fine	14.0	M14	24.0	28.0
20215989	14x56	Left Hand	Coarse	14.0	M14	24.0	56.0
20215996	14x56	Left Hand	Fine	14.0	M14	24.0	56.0
20216009	16x32	Left Hand	Coarse	16.0	M16	26.0	32.0
20216016	16x32	Left Hand	Fine	16.0	M16	26.0	32.0
20216023	16x64	Left Hand	Coarse	16.0	M16	26.0	64.0
20216030	16x64	Left Hand	Fine	16.0	M16	26.0	64.0
20216047	20x40	Left Hand	Coarse	20.0	M20	34.0	40.0
20216054	20x40	Left Hand	Fine	20.0	M20	34.0	40.0

Male Clevis Joints

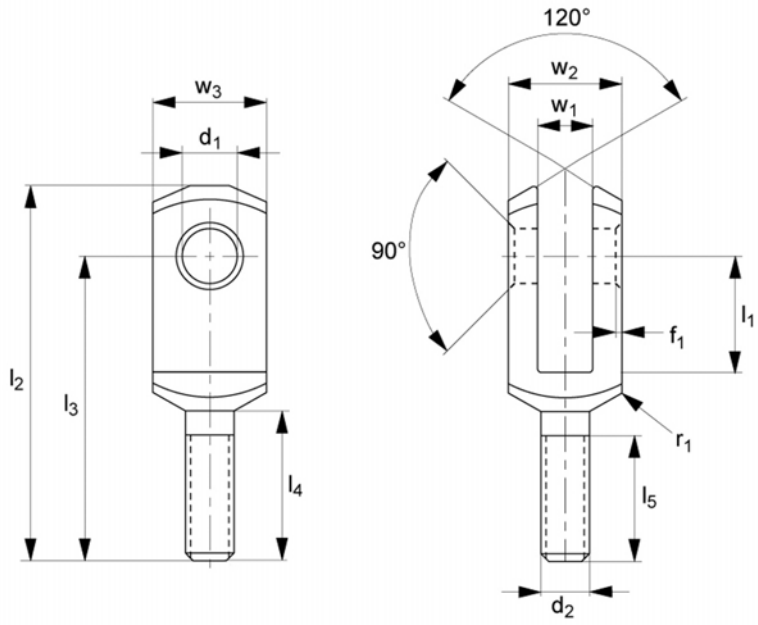



Features

- It links two rods or shafts in a U-shape to enable tractive or linear thrust movements.
- It can withstand heavy loads and pressures, making it suitable for heavy-duty applications.
- Used as a coupling on the end of air cylinders or at each end of a turnbuckle or wire rope for tensioning.

Specifications

Material: Steel

These Male Clevis Joints are a coupling in which the matching components are kept in place by a pin and fit between the forks. They link two rods or shafts in a U-shape to enable tractive or linear thrust movements.

It is designed to provide a durable and strong connection while also withstanding wear and tear. It can withstand heavy loads and pressures, making it suitable for heavy-duty applications.

Installing them is as easy as screwing them into the threaded hole.They are most commonly used as a coupling on the end of air cylinders or at each end of a turnbuckle or wire rope for tensioning, as well as in construction, automotive, and manufacturing industries.

Male Clevis Joints

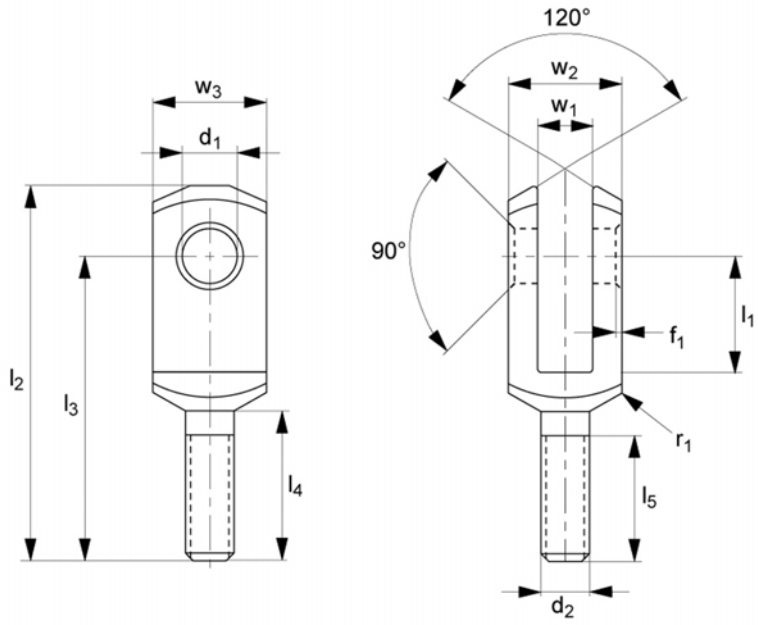



Part Number	Size	Thread hand	d1 tol. H9	l1 ±0.5	d2	l2 ±0.25	l3	l4 ±0.2
20211295	6x12	Right Hand	6.0	12.0	M6	44.0	37.0	20.0
20211301	8x16	Right Hand	8.0	16.0	M8	57.0	47.0	25.0
20211318	10x20	Right Hand	10.0	20.0	M10	69.0	57.0	30.0
20211325	12x24	Right Hand	12.0	24.0	M12	82.0	68.0	35.0
20211332	14x28	Right Hand	14.0	28.0	M14	94.0	78.0	40.0
20211349	16x32	Right Hand	16.0	32.0	M16	108.0	89.0	45.0
20211356	20x40	Right Hand	20.0	40.0	M20	134.0	109.0	55.0
20211363	6x12	Left Hand	6.0	12.0	M6	44.0	37.0	20.0
20211370	8x16	Left Hand	8.0	16.0	M8	57.0	47.0	25.0
20211387	10x20	Left Hand	10.0	20.0	M10	69.0	57.0	30.0
20211394	12x24	Left Hand	12.0	24.0	M12	82.0	68.0	35.0
20211400	14x28	Left Hand	14.0	28.0	M14	94.0	78.0	40.0
20211417	16x32	Left Hand	16.0	32.0	M16	108.0	89.0	45.0
20211424	20x40	Left Hand	20.0	40.0	M20	134.0	109.0	55.0
20211431	6x12	Right Hand	6.0	12.0	M6	44.0	37.0	20.0
20211448	8x16	Right Hand	8.0	16.0	M8	57.0	47.0	25.0
20211455	10x20	Right Hand	10.0	20.0	M10	69.0	57.0	30.0
20211462	12x24	Right Hand	12.0	24.0	M12	82.0	68.0	35.0

Male Clevis Joints

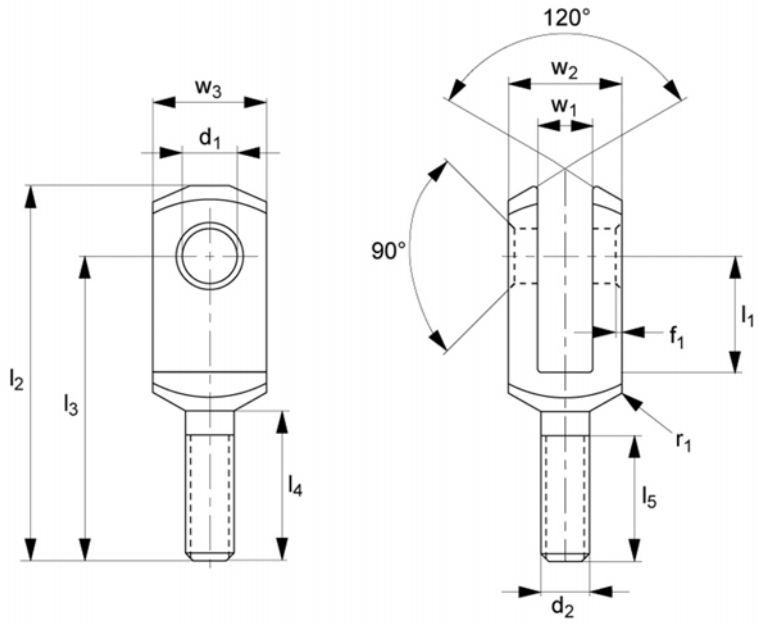



Part Number	Size	Thread hand	d1 tol. H9	l1 ±0.5	d2	l2 ±0.25	l3	l4 ±0.2
20211479	14x28	Right Hand	14.0	28.0	M14	94.0	78.0	40.0
20211486	16x32	Right Hand	16.0	32.0	M16	108.0	89.0	45.0
20211493	20x40	Right Hand	20.0	40.0	M20	134.0	109.0	55.0
20211509	6x12	Left Hand	6.0	12.0	M6	44.0	37.0	20.0
20211516	8x16	Left Hand	8.0	16.0	M8	57.0	47.0	25.0
20211523	10x20	Left Hand	10.0	20.0	M10	69.0	57.0	30.0
20211530	12x24	Left Hand	12.0	24.0	M12	82.0	68.0	35.0
20211547	14x28	Left Hand	14.0	28.0	M14	94.0	78.0	40.0
20211554	16x32	Left Hand	16.0	32.0	M16	108.0	89.0	45.0
20211561	20x40	Left Hand	20.0	40.0	M20	134.0	109.0	55.0

Mating Pieces for Clevis Joints

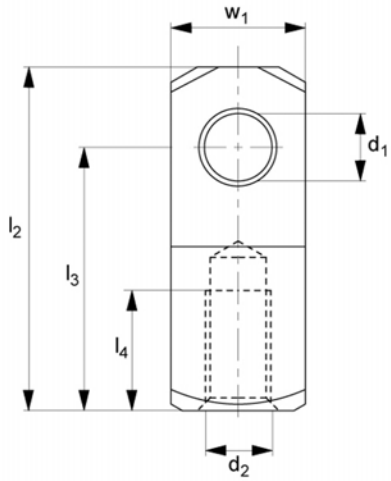

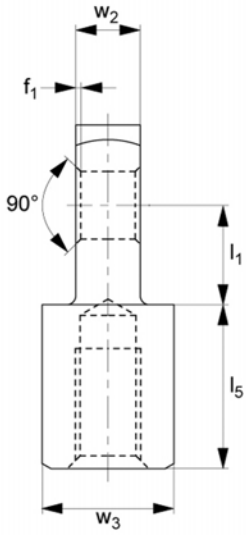



Features

- Intended to fit between our clevis joints to provide a connection where an angular offset is required.
- The thread size is designed to match the clevis joint, making installation and removal simple.
- The smooth surface finish of the mating piece decreases friction and wear, contributing to the longevity and efficiency of the joint.

Specifications

Material: Stainless Steel, Steel

These Clevis Joint Mating Pieces are meant to work with the clevis joint, allowing for smooth and controlled movement. These are intended to fit between our clevis joints to provide a connection where an angular offset is required.

The excellent fit of the mating piece provides for a tight and solid connection with the clevis joint, assuring stability, reliability, and optimal load transmission. The smooth surface finish of the mating piece decreases friction and wear between the mating components, contributing to the overall longevity and efficiency of the joint.

It ensures they remain aligned and engaged under varying loads and conditions by providing a reliable and safe connection. The thread size is designed to match the clevis joint, making installation and removal simple. Used in various applications for steering linkages, suspension systems, and control mechanisms in the automotive industry, manufacturing, and construction.

Mating Pieces for Clevis Joints

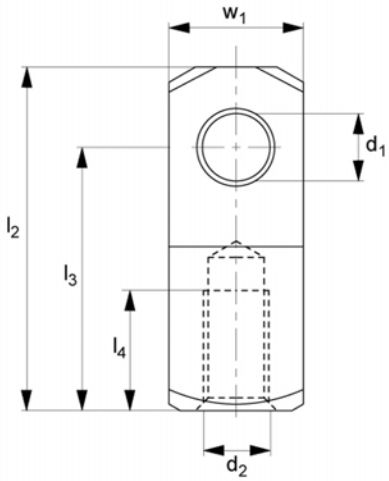

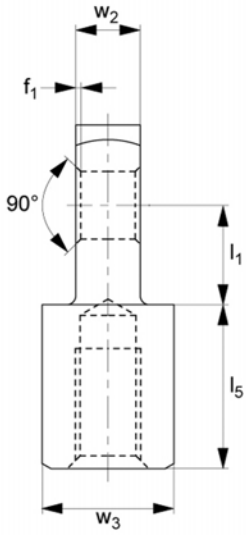



Part Number	Thread hand	Thread Type	d1 tol. H9	l1 ±0.5	d2	l2 ±0.5	Material
20211578	Right Hand	Coarse	4.0	6.0	M4	21.0	Steel
20211585	Right Hand	Coarse	5.0	7.5	M5	26.0	Steel
20211592	Right Hand	Coarse	6.0	9.0	M6	31.0	Steel
20211608	Right Hand	Coarse	8.0	12.0	M8	42.0	Steel
20211615	Right Hand	Fine	8.0	12.0	M8	42.0	Steel
20211622	Right Hand	Coarse	10.0	15.0	M10	52.0	Steel
20211639	Right Hand	Fine	10.0	15.0	M10	52.0	Steel
20211646	Right Hand	Coarse	12.0	18.0	M12	62.0	Steel
20211653	Right Hand	Fine	12.0	18.0	M12	62.0	Steel
20211660	Right Hand	Coarse	14.0	21.0	M14	72.0	Steel
20211677	Right Hand	Fine	14.0	21.0	M14	72.0	Steel
20211684	Right Hand	Coarse	16.0	24.0	M16	83.0	Steel
20211691	Right Hand	Fine	16.0	24.0	M16	83.0	Steel
20211707	Right Hand	Coarse	20.0	30.0	M20	105.0	Steel
20211714	Right Hand	Fine	20.0	30.0	M20	105.0	Steel
20211721	Left Hand	Coarse	4.0	6.0	M4	21.0	Steel
20211738	Left Hand	Coarse	5.0	7.5	M5	26.0	Steel
20211745	Left Hand	Coarse	6.0	9.0	M6	31.0	Steel

Mating Pieces for Clevis Joints

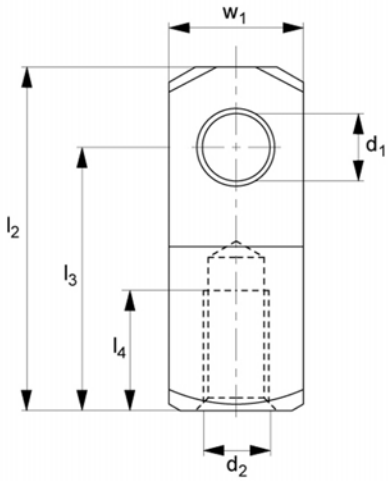

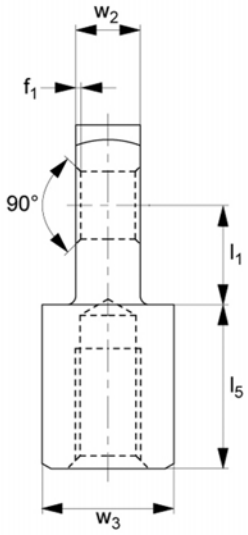



Part Number	Thread hand	Thread Type	d1 tol. H9	l1 ±0.5	d2	l2 ±0.5	Material
20211752	Left Hand	Coarse	8.0	12.0	M8	42.0	Steel
20211769	Left Hand	Fine	8.0	12.0	M8	42.0	Steel
20211776	Left Hand	Coarse	10.0	15.0	M10	52.0	Steel
20211783	Left Hand	Fine	10.0	15.0	M10	52.0	Steel
20211790	Left Hand	Coarse	12.0	18.0	M12	62.0	Steel
20211806	Left Hand	Fine	12.0	18.0	M12	62.0	Steel
20211813	Left Hand	Coarse	14.0	21.0	M14	72.0	Steel
20211820	Left Hand	Fine	14.0	21.0	M14	72.0	Steel
20211837	Left Hand	Coarse	16.0	24.0	M16	83.0	Steel
20211844	Left Hand	Fine	16.0	24.0	M16	83.0	Steel
20211851	Left Hand	Coarse	20.0	30.0	M20	105.0	Steel
20211868	Left Hand	Fine	20.0	30.0	M20	105.0	Steel
20211875	Right Hand	Coarse	4.0	6.0	M4	21.0	Stainless Steel
20211882	Right Hand	Coarse	5.0	7.5	M5	26.0	Stainless Steel
20211899	Right Hand	Coarse	6.0	9.0	M6	31.0	Stainless Steel
20211905	Right Hand	Coarse	8.0	12.0	M8	42.0	Stainless Steel
20211912	Right Hand	Fine	8.0	12.0	M8	42.0	Stainless Steel
20211929	Right Hand	Coarse	10.0	15.0	M10	52.0	Stainless Steel

Mating Pieces for Clevis Joints

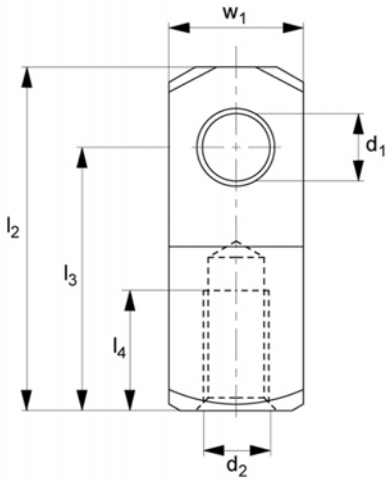

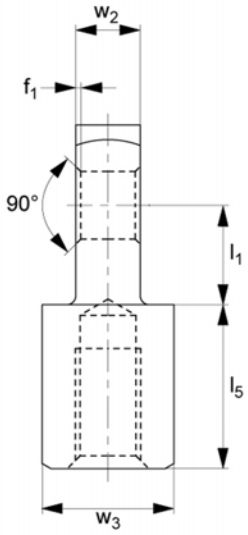



Part Number	Thread hand	Thread Type	d1 tol. H9	l1 ±0.5	d2	l2 ±0.5	Material
20211936	Right Hand	Fine	10.0	15.0	M10	52.0	Stainless Steel
20211943	Right Hand	Coarse	12.0	18.0	M12	62.0	Stainless Steel
20211950	Right Hand	Fine	12.0	18.0	M12	62.0	Stainless Steel
20211967	Right Hand	Coarse	14.0	21.0	M14	72.0	Stainless Steel
20211974	Right Hand	Fine	14.0	21.0	M14	72.0	Stainless Steel
20211981	Right Hand	Coarse	16.0	24.0	M16	83.0	Stainless Steel
20211998	Right Hand	Fine	16.0	24.0	M16	83.0	Stainless Steel
20212001	Right Hand	Coarse	20.0	30.0	M20	105.0	Stainless Steel
20212018	Right Hand	Fine	20.0	30.0	M20	105.0	Stainless Steel
20212025	Left Hand	Coarse	4.0	6.0	M4	21.0	Stainless Steel
20212032	Left Hand	Coarse	5.0	7.5	M5	26.0	Stainless Steel
20212049	Left Hand	Coarse	6.0	9.0	M6	31.0	Stainless Steel
20212056	Left Hand	Coarse	8.0	12.0	M8	42.0	Stainless Steel
20212063	Left Hand	Fine	8.0	12.0	M8	42.0	Stainless Steel
20212070	Left Hand	Coarse	10.0	15.0	M10	52.0	Stainless Steel
20212087	Left Hand	Fine	10.0	15.0	M10	52.0	Stainless Steel
20212094	Left Hand	Coarse	12.0	18.0	M12	62.0	Stainless Steel
20212100	Left Hand	Fine	12.0	18.0	M12	62.0	Stainless Steel

Mating Pieces for Clevis Joints

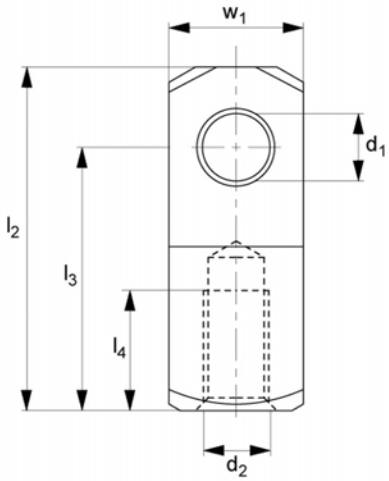

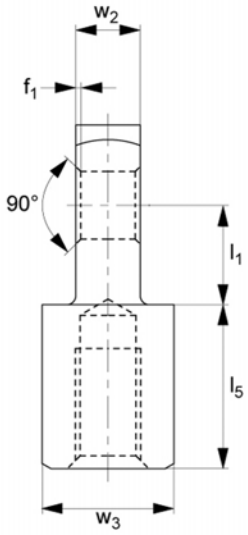



Part Number	Thread hand	Thread Type	d1 tol. H9	l1 ±0.5	d2	l2 ±0.5	Material
20212117	Left Hand	Coarse	14.0	21.0	M14	72.0	Stainless Steel
20212124	Left Hand	Fine	14.0	21.0	M14	72.0	Stainless Steel
20212131	Left Hand	Coarse	16.0	24.0	M16	83.0	Stainless Steel
20212148	Left Hand	Fine	16.0	24.0	M16	83.0	Stainless Steel
20212155	Left Hand	Coarse	20.0	30.0	M20	105.0	Stainless Steel
20212162	Left Hand	Fine	20.0	30.0	M20	105.0	Stainless Steel

Clevis Pins with Hole

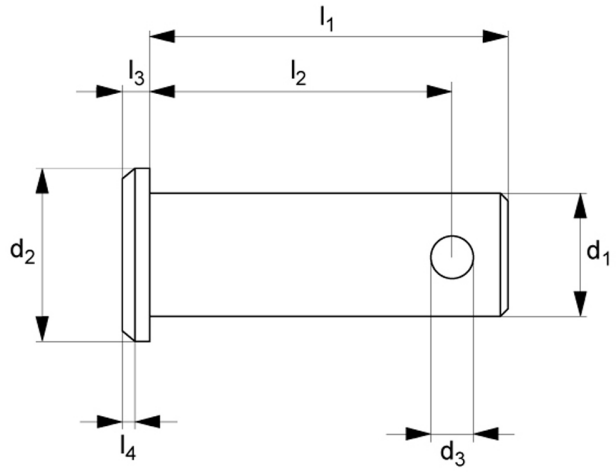



Features

- It fits through the holes of a clevis joint, after which a cotter pin, spring pin, or other locking mechanism is placed through the hole to secure it in place.
- Its cylindrical design enables simple insertion into the holes and rotation of the mating component.
- It has exceptional strength, durability, and corrosion resistance.

Specifications

Material: Steel

These Clevis Pins with Hole are cylindrical pins with a drilled hole through the pin's body on one side and a flat head on the other. It is intended to fit through the holes of a clevis joint, after which a cotter pin, spring pin, or other locking mechanism is placed through the hole in the clevis pin to secure it in place and prevent it from turning or dislodging.

It has exceptional strength, durability, and corrosion resistance. Its cylindrical design enables simple insertion into the holes and rotation of the mating component. At the same time, the flat head provides a stop during installation.

It is simple to install and remove from the clevis joint. Used in various applications for steering linkages, suspension systems, and control mechanisms in the automotive industry, manufacturing, and construction.

Clevis Pins with Hole

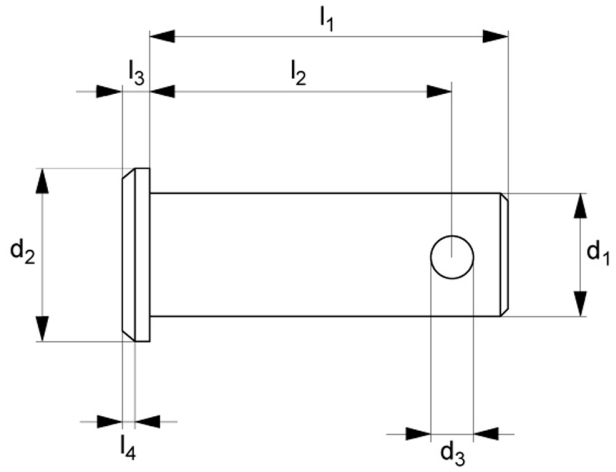



Part Number	d1 tol. h11	d2 tol. h14	d3 tol. h14	l1 tol. js15	l2 ±0.5	l3 tol. js14	l4
20192600	5.0	8.0	1.0	15.0	12.3	1.5	0.5
20192617	6.0	9.0	1.6	18.0	15.3	1.5	0.5
20192624	8.0	12.0	2.0	23.0	19.5	2.0	1.0
20192631	10.0	14.0	3.2	29.0	24.5	2.0	1.0
20192594	12.0	17.0	4.0	35.0	29.5	3.0	1.5
20192648	14.0	19.0	4.0	40.0	32.5	3.0	1.5
20192655	16.0	20.0	4.0	45.0	38.2	3.5	1.5
20192662	18.0	25.0	5.0	50.0	43.5	3.5	1.5
20192679	20.0	28.0	5.0	53.0	47.0	4.0	1.5
20192686	25.0	34.0	6.3	67.0	59.0	5.5	1.5
20192693	28.0	34.0	6.3	72.0	63.2	5.5	2.0
20192709	30.0	36.0	6.3	77.0	68.2	5.5	2.0
20192716	35..0	45.0	8.0	87.0	76.5	7.0	2.0
20192723	40.0	48.0	8.0	100.0	90.0	6.0	5.0
20192730	42.0	48.0	8.0	100.0	90.0	7.0	5.0
20192747	50.0	58.0	10.0	115.0	103.0	7.0	6.0
20192754	5.0	8.0	1.2	15.0	12.3	1.5	0.5
20192761	6.0	9.0	1.6	18.0	15.3	1.5	0.5

Clevis Pins with Hole

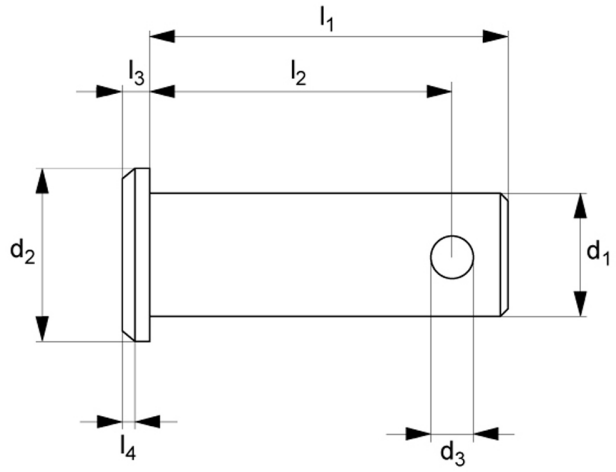



Part Number	d1 tol. h11	d2 tol. h14	d3 tol. h14	l1 tol. js15	l2 ±0.5	l3 tol. js14	l4
20192778	8.0	12.0	2.0	23.0	19.5	2.0	1.0
20192785	10.0	14.0	3.2	29.0	24.5	2.0	1.0
20192792	12.0	17.0	4.0	35.0	29.5	3.0	1.5
20194659	14.0	19.0	4.0	40.0	32.5	3.0	1.5
20192808	16.0	21.0	4.0	45.0	38.2	3.0	
20192815	20.0	28.0	5.0	53.0	47.0	4.0	
20192822	25.0	34.0	6.3	67.0	59.0	5.5	

Clevis Pins

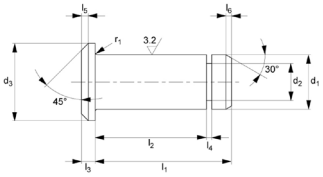

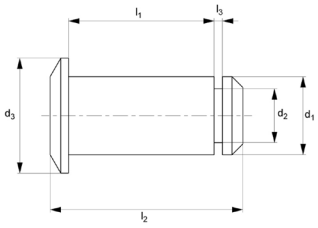



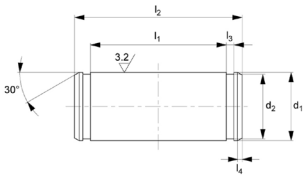

Features

- It forms a pivotal connection that allows for angular movement and adjustment.
- It has exceptional strength, durability, and corrosion resistance.
- Its cylindrical design enables simple insertion into the holes and rotation of the mating component.

Specifications

Material: Igumid G, Steel, Stainless Steel

These Clevis Pins are cylindrical pins with a flat head on one end. It is intended to fit into the holes of a clevis joint, forming a pivotal connection that allows for angular movement and adjustment.

It has exceptional strength, durability, and corrosion resistance. Its cylindrical design enables simple insertion into the holes and rotation of the mating component. At the same time, the flat head provides a stop during installation.

Its design allows for quick and easy disassembly, modification, or replacement of the pin as needed. Used in the automobile industry, manufacturing, and construction for steering linkages, suspension systems, and control mechanisms.

Clevis Pins

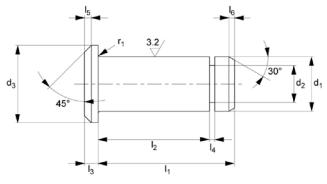

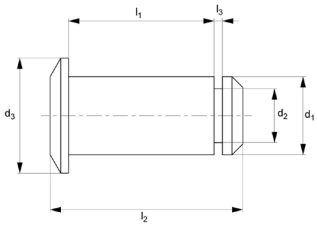



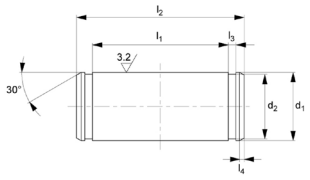

Part Number	d1 tol. h11	d2	d3	l1	l2	Finish	Material
20194772	4.0	3.2	6.0	10.5	8.5	Zinc Plated	Stainless Steel
20194680	4.0	3.2	6.0	10.5	8.5	Zinc Plated	Steel
20194789	5.0	4.0	8.0	13.0	10.5	Zinc Plated	Stainless Steel
20194697	5.0	4.0	8.0	13.0	10.5	Zinc Plated	Steel
20194796	6.0	5.0	9.0	15.5	12.5	Zinc Plated	Stainless Steel
20194703	6.0	5.0	9.0	15.5	12.5	Zinc Plated	Steel
20194802	8.0	6.0	12.0	20.0	16.5	Zinc Plated	Stainless Steel
20194710	8.0	6.0	12.0	20.0	16.5	Zinc Plated	Steel
20194819	10.0	8.0	14.0	25.0	20.5	Zinc Plated	Stainless Steel
20194727	10.0	8.0	14.0	25.0	20.5	Zinc Plated	Steel
20194673	12.0	9.0	17.0	30.0	24.5	Zinc Plated	Stainless Steel
20194734	12.0	9.0	17.0	30.0	24.5	Zinc Plated	Steel
20192372	14.0	10.0	19.0	33.0	27.5	Zinc Plated	Steel
20194826	16.0	12.0	20.0	38.5	32.5	Zinc Plated	Stainless Steel
20194741	16.0	12.0	20.0	38.5	32.5	Zinc Plated	Steel
20194833	20.0	17.5	26.0	46.0	40.5	Zinc Plated	Stainless Steel
20194758	20.0	17.5	26.0	46.0	40.5	Zinc Plated	Steel
20194840	25.0	18.0	32.0	57.0	50.5	Zinc Plated	Stainless Steel
20194765	25.0	18.0	32.0	57.0	50.5	Zinc Plated	Steel
20192389	4.0	3.2	7.0	8.0	12.5	Blackened	Igumid G

Clevis Pins

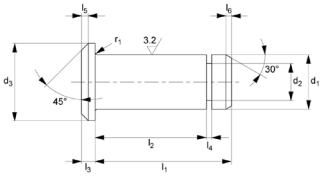

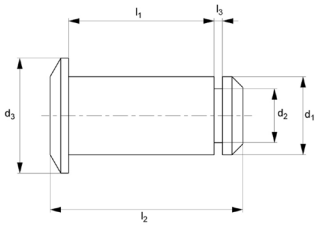



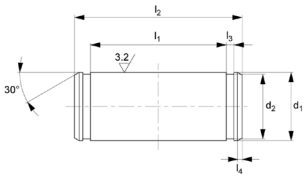

Part Number	d1 tol. h11	d2	d3	l1	l2	Finish	Material
20192396	5.0	4.0	8.0	12.0	16.5	Blackened	Igumid G
20192402	5.0	4.0	8.0	10.0	14.5	Blackened	Igumid G
20192419	6.0	4.0	9.0	12.0	16.5	Blackened	Igumid G
20192426	8.0	5.0	12.0	16.0	21.5	Blackened	Igumid G
20192433	10.0	7.0	15.0	20.0	27.0	Blackened	Igumid G
20192440	12.0	9.0	18.0	24.0	31.5	Blackened	Igumid G
20192457	14.0	12.0	22.0	27.0	36.0	Blackened	Igumid G
20192464	15.0	12.0	23.0	27.0	36.0	Blackened	Igumid G
20192471	16.0	12.0	24.0	32.0	42.0	Blackened	Igumid G
20192488	17.0	12.0	25.0	32.0	42.0	Blackened	Igumid G
20192495	20.0	15.0	30.0	40.0	51.0	Blackened	Igumid G
20192501	5.0	4.8	10.5	15.0	0.7	Blackened	Igumid G
20192518	6.0	5.7	12.2	17.0	0.8	Blackened	Igumid G
20192525	8.0	7.6	16.5	20.0	0.9	Blackened	Igumid G
20192532	10.0	9.6	20.5	25.0	1.1	Blackened	Igumid G
20192549	12.0	11.5	24.5	30.0	1.1	Blackened	Igumid G
20192556	16.0	15.2	32.5	39.0	1.1	Blackened	Igumid G
20192563	20.0	19.0	40.5	48.0	1.3	Blackened	Igumid G

Clevis Retention Clips

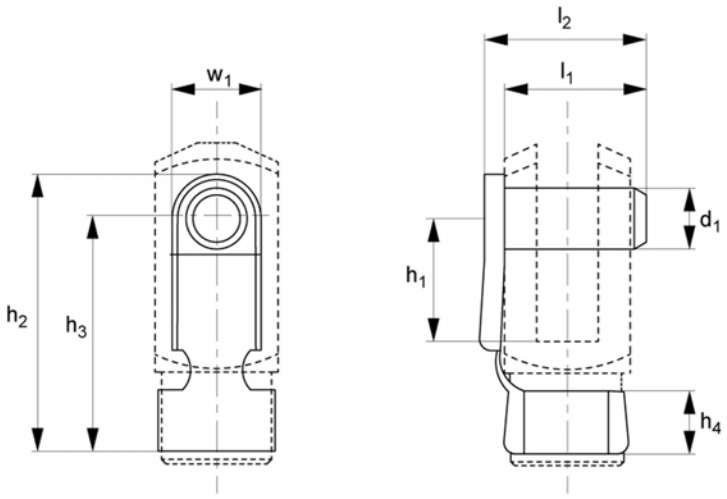



Features

- It holds a clevis pin in place, providing a reliable and convenient option for maintaining mechanical connections' integrity.
- The steel material ensures longevity and the capacity to withstand large weights, also resistant to wear and corrosion.
- It has a loop-like or U-shaped design that fits around the base of a clevis joint, locking it in place.

Specifications

Material: Steel

These Clevis Retention Clips are used to hold a clevis pin in place, providing a reliable and convenient option for maintaining mechanical connections' integrity.

It has a loop-like or U-shaped design that fits around the base of a clevis joint, locking it in place and preventing unintentional disconnection, resulting in a neat, compact assembly. The steel material ensures longevity and the capacity to withstand large weights, as well as resistance to wear and corrosion.

It is simple to install and detach from the clevis joint. Used in various applications for steering linkages, suspension systems, and control mechanisms in the automotive industry, manufacturing, and construction.

Clevis Retention Clips

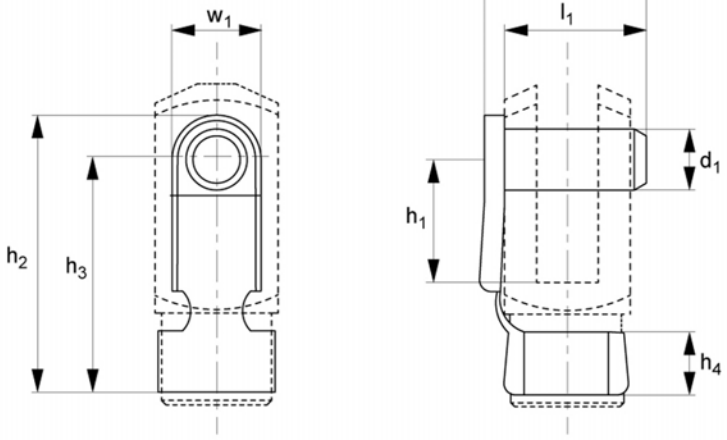



Part Number	Size	d1 tol. h11	h1	h2	h3	h4	l1
20212179	4x8	4.0	8.0	19.0	15.0	4.0	9.0
20212186	5x10	5.0	10.0	23.0	19.0	4.5	12.0
20212193	5x20	5.0	20.0	33.0	29.0	4.5	12.0
20212209	6x12	6.0	12.0	28.0	23.0	6.0	14.0
20212216	6x24	6.0	24.0	40.0	35.0	6.0	14.0
20212223	8x16	8.0	16.0	38.0	31.0	8.0	19.0
20212230	8x32	8.0	32.0	53.0	47.0	8.0	19.0
20212247	10x20	10.0	20.0	46.0	39.0	10.0	23.0
20212254	10x40	10.0	40.0	66.0	59.0	10.0	23.0
20212261	12x24	12.0	24.0	55.0	46.0	12.0	28.0
20212278	12x48	12.0	48.0	79.0	71.0	12.0	28.0
20212285	14x28	14.0	28.0	62.0	52.0	14.0	31.0
20212292	14x56	14.0	56.0	92.0	82.0	14.0	31.0
20212308	16x32	16.0	32.0	72.0	62.0	16.0	36.0
20212315	16x64	16.0	64.0	103.0	92.0	16.0	36.0
20212322	20x40	20.0	40.0	88.0	72.0	16.0	44.0
20212339	4x8	4.0	8.0	19.0	15.0	4.5	9.5
20212346	5x10	5.0	10.0	23.0	19.0	5.5	12

Clevis Retention Clips

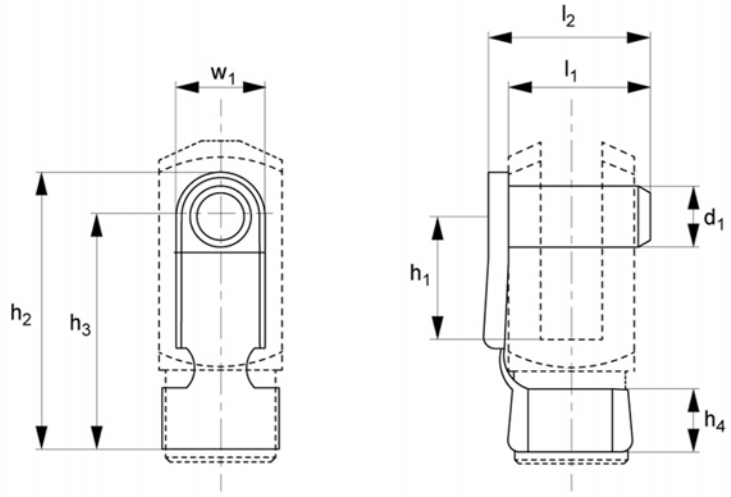



Part Number	Size	d1 tol. h11	h1	h2	h3	h4	l1
20212353	5x12	5.0	12.0	27.0	23.0	6.5	14
20212360	6x12	6.0	12.0	27.0	23.0	6.5	14
20212377	8x16	8.0	16.0	35.5	30.0	8.0	19
20212384	10x20	10.0	20.0	45.0	38.0	10.0	23
20212391	12x24	12.0	24.0	53.0	45.0	12.0	28
20212407	16x32	16.0	32.0	73.0	62.0	16.0	36

Cotter Pins

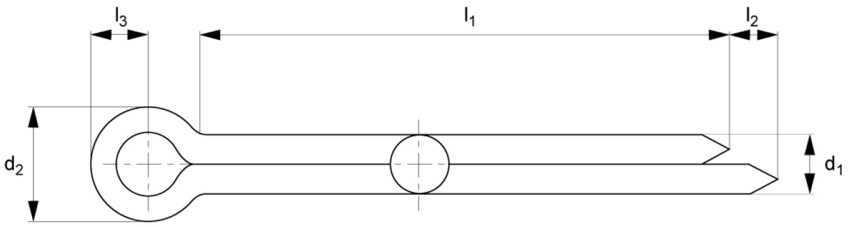



Features

- Featuring a split pin design; it is inserted into a hole in the clevis pin, where it is bent over to keep it from slipping out.
- Strong, corrosion-resistant and long-lasting.
- It remains secure even when subjected to vibration, movement or heavy loads

Specifications

Material: Steel

Cotter Pins are used to hold a clevis pin in place. It features a split pin design that is inserted into a hole in the clevis pin. The cotter pin is then bent over to keep it from slipping out. This ensures the fastener remains secure even when subjected to vibration, movement or heavy loads.

Simple to operate; simply requires alignment between the fastener holes and the mating component, the insertion of the cotter pin through the holes and the bending of the tines to secure it in place.

Cotter Pins

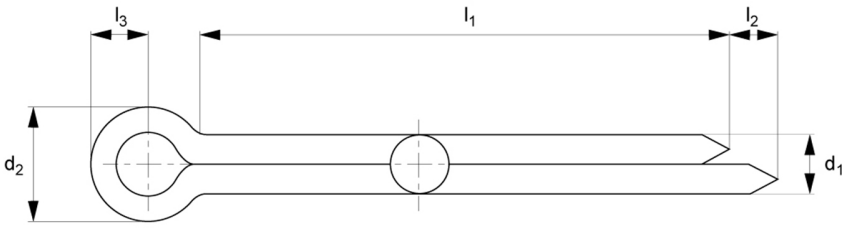



Part Number	d1 nom	d1 min	d1 max	d2 min	d2 max	l1	l2
20194987	1.0	0.8	0.9	0.8	1.6	10.0	1.6
20194970	1.6	1.3	1.4	1.25	2.5	18.0	2.5
20195052	2.0	1.7	1.8	1.25	2.5	18.0	2.5
20194994	3.2	2.7	2.9	1.6	3.2	22.0	3.2
20195007	4.0	3.5	3.7	2.0	4.0	28.0	4.0
20195014	5.0	4.4	4.6	2.0	4.0	50.0	4.0
20195021	6.0	5.7	5.9	2.0	4.0	71.0	4.0
20195038	8.0	7.3	7.5	2.0	4.0	112.0	4.0
20195045	10.0	9.3	9.5	3.2	6.3	112.0	6.3
20195069	1.0	0.8	0.9	0.8	1.6	10.0	1.6
20195076	1.6	1.3	1.4	1.25	2.5	18.0	2.5
20195113	2.0	1.7	1.8	1.25	2.5	18.0	1.25
20195083	3.2	2.7	2.9	1.6	3.2	22.0	3.2
20194963	4.0	3.5	3.7	2.0	4.0	28.0	4.0
20195090	5.0	4.4	4.6	2.0	4.0	50.0	4.0
20195106	6.3	5.7	5.9	2.0	4.0	71.0	4.0

Safety Fasteners (KLM)

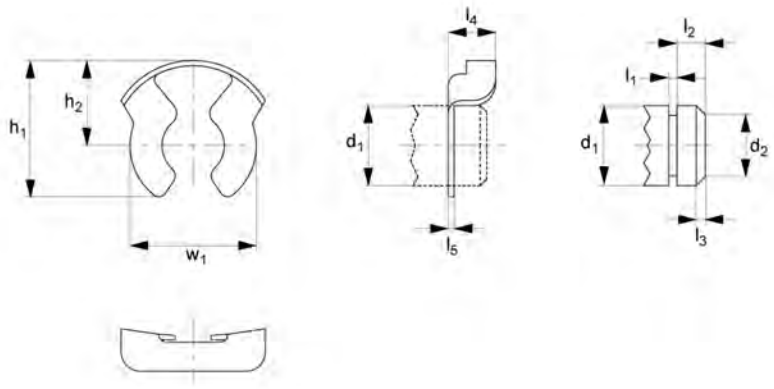



Features

- Designed to prevent inadvertent clevis pin disengagement.
- The fastener remains firmly latched even under high levels of vibration or stress.
- Used in industrial machinery and equipment, construction, and automotive.

Specifications

Material: Steel

These Safety Fasteners (KLM) are clevis retention clips designed to prevent inadvertent clevis pin disengagement, ensuring the safety and integrity of the connections.

Its mechanism ensures that the fastener remains firmly latched even under high levels of vibration or stress. The fastener is built to withstand tampering or unauthorised removal, making it ideal for applications that require safety and security.

It is simple to install and remove without the use of any extra tools. It is also long-lasting and resistant to extreme environmental conditions. Commonly used in applications including industrial machinery and equipment, construction, and automotive.

Safety Fasteners (KLM)

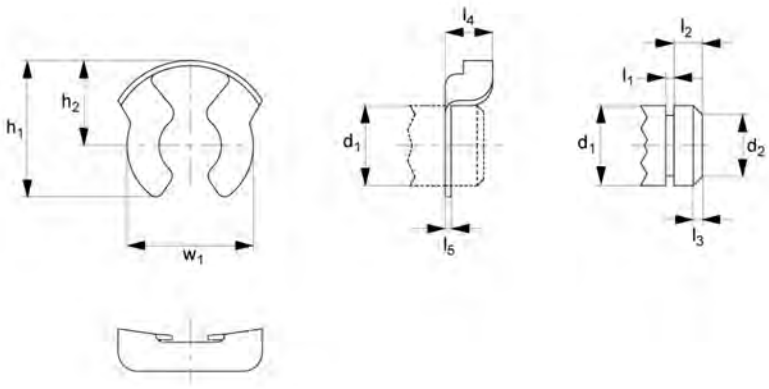



Part Number	d1 tol. h11	d2 tol. h11	h1	h2	l1 +0.10	l2	Finish
20212513	4.0	3.2	7.2	4.3	0.64	2.0	Zinc Silver Plated
20212520	5.0	4.0	8.4	5.2	0.74	2.5	Zinc Silver Plated
20212537	6.0	5.0	11.25	6.8	0.74	3.0	Zinc Silver Plated
20212544	8.0	6.0	11.9	7.4	0.94	3.5	Zinc Silver Plated
20212551	10.0	8.0	16.3	9.5	1.05	4.5	Zinc Silver Plated
20212568	12.0	9.0	18.0	10.5	1.15	5.5	Zinc Silver Plated
20212575	14.0	10.0	20.0	12.2	1.25	5.5	Zinc Silver Plated
20212582	16.0-18.0	12.0	24.0	14.3	1.35	5.5-6.0	Zinc Silver Plated
20212599	20.0-25.0	16.0-18.0	34.0	19.0	1.80	5.5-6.5	Zinc Silver Plated
20212605	4.0	3.2	7.2	4.3	0.64	2.0	Yellow Zinc Plated
20212612	5.0	4.0	8.4	5.2	0.74	2.5	Yellow Zinc Plated
20212629	6.0	5.0	11.25	6.8	0.74	3.0	Yellow Zinc Plated
20212636	8.0	6.0	11.9	7.4	0.94	3.5	Yellow Zinc Plated
20212643	10.0	8.0	16.3	9.5	1.05	4.5	Yellow Zinc Plated
20212650	12.0	9.0	18.0	10.5	1.15	5.5	Yellow Zinc Plated
20212674	14.0	10.0	20.0	12.2	1.25	5.5	Yellow Zinc Plated
20212681	16.0-18.0	12.0	24.0	14.3	1.35	5.5-6.0	Yellow Zinc Plated
20212698	20.0-25.0	16.0-18.0	34.0	19.0	1.80	5.5-6.5	Yellow Zinc Plated

Safety Fasteners (SLM)

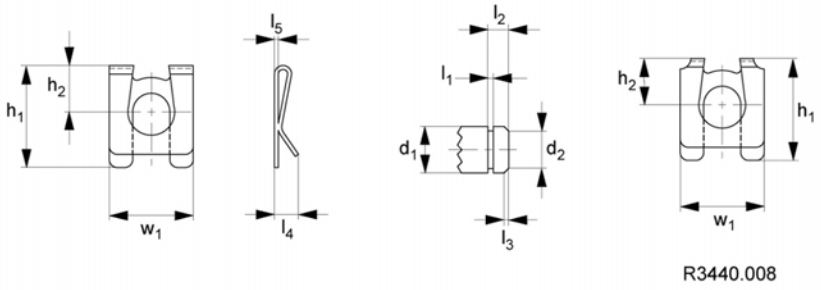

R3440.008



Features

- It ensures connection safety by avoiding disengagement or loosening.
- The assembly "rattle" is removed by the fasteners' concaved back, retaining the clevis pin under tension.
- Used in automotive, medical, and electrical applications.

Specifications

Material: Steel

These Safety Fasteners (SLM) are intended to keep the pin that has been inserted into the joint from being taken out. It ensures connection safety and integrity by avoiding inadvertent disengagement or loosening.

Its mechanism guarantees that the fastener stays securely fastened even when subjected to high levels of vibration or stress. The fastener is designed to withstand tampering or unauthorised removal, making it perfect for applications requiring safety and security.

It is simple to install and remove by hand and is compatible with clevis pins. The assembly "rattle" is removed by the fasteners' concaved back, retaining the clevis pin under tension, and the safety lip prevents accidental removal. Used primarily in automotive, medical, and electrical applications.

Safety Fasteners (SLM)

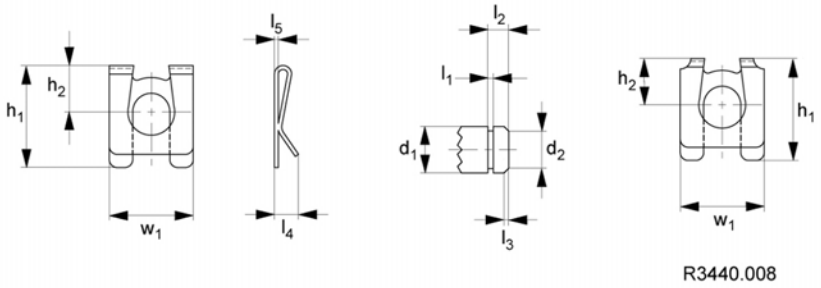

R3440.008



Part Number	d1 tol. h11	d2 tol. h11	h1	h2	l1 +0.10	l2	l3
20212414	4.0	3.2	8.5	4.0	0.64	2.0	0.5
20212421	5.0	4.0	10.7	5.0	0.74	2.5	0.5
20212438	6.0	5.0	14.1	6.0	0.74	3.0	0.75
20212452	8.0	6.0	17.5	8.0	0.94	3.5	1.0
20212469	10.0	8.0	22.1	10.0	1.05	4.5	1.0
20212476	12.0	9.0	26.0	12.0	1.15	5.0	1.25
20212490	14.0	10.0	30.0	13.5	1.25	5.5	1.5
20212506	16.0	12.0	34.0	16.0	1.35	6.0	1.5

Stainless Circlips

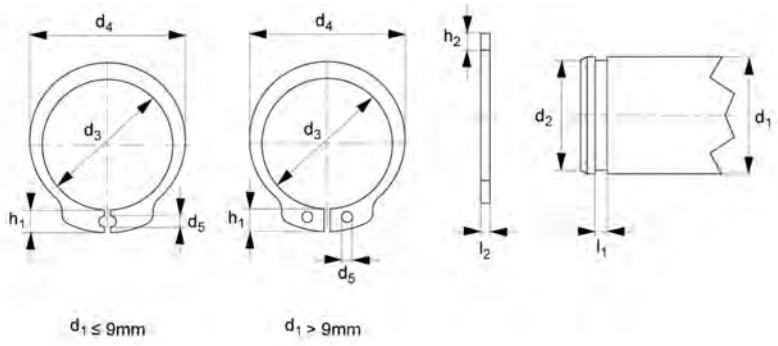



Features

- It attaches and grabs bearings, gears and other components to shafts or in bores.
- Suited for use in severe settings or when moisture or chemicals are present.
- Used in automotive, industrial, and manufacturing industries.

Specifications

Material: 303 Stainless Steel

These C-shaped Stainless Circlips are used to attach and securely grab bearings, gears, and other components to shafts or in bores.

It has good corrosion resistance, durability, and strength, making it suited for use in severe settings or when moisture or chemicals are present.

It is simple to install and remove, making assembly and maintenance easier and more efficient. It is commonly used in automotive, industrial, and manufacturing industries.

Stainless Circlips

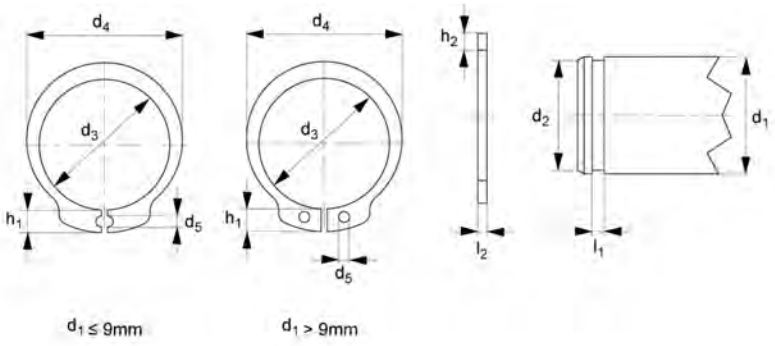



Part Number	d1	d2	d3	d4	d5 min	h1	h2
20212773	5.0	4.8	3.7	6.2	1.0	2.5	1.1
20212780	6.0	5.7	5.6	7.5	1.15	2.7	1.3
20212797	8.0	7.6	7.4	9.6	1.2	3.2	1.5
20212803	10.0	9.6	9.3	12.7	1.7	3.3	1.8
20212810	12.0	11.5	11.0	7.7	1.7	3.3	1.8
20212827	16.0	15.2	14.7	12.2	1.7	3.7	2.2
20212834	20.0	19.0	18.5	16.2	2.0	4.0	2.6

Plastic Circlips

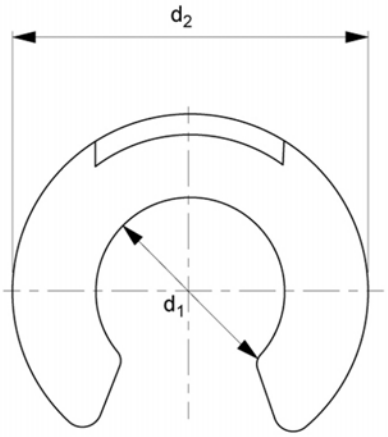

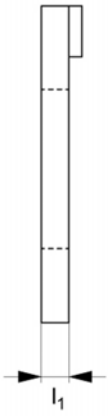



Features

- Fits into grooves or bores, providing a secure and dependable grasp on shafts.
- Provides durability, strength, and corrosion resistance.
- Used in automotive, industrial, and electronics applications.

Specifications

Material: POM
Colour: Black

These Plastic Circlips are intended to fit into grooves or bores, providing a secure and dependable grasp on shafts and other cylindrical objects, clevis joints and clevis pins.

Provides durability, strength, corrosion resistance, and wear resistance. Aside from being lightweight, it is perfect for applications demanding a weight reduction.

Simple to install and remove, providing convenience and efficiency throughout assembly and maintenance operations. Used in various applications such as automotive, industrial, and electronics.

Plastic Circlips

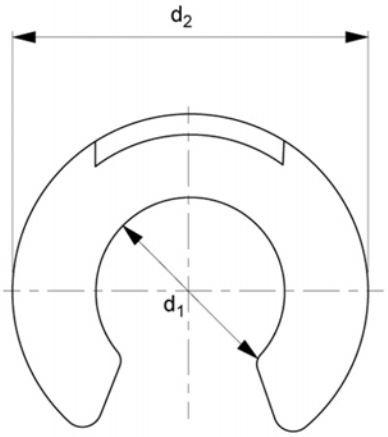

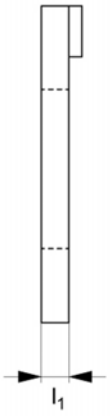



Part Number	d1	d2	l1
20212704	3.2	7.0	1.0
20212711	4.0	9.0	1.1
20212728	5.0	11.0	1.1
20212735	7.0	14.0	1.3
20212742	9.0	18.5	1.4
20212759	12.0	23.0	1.6
20212766	15.0	28.0	1.9

Heavy Duty Rod Ends - Female

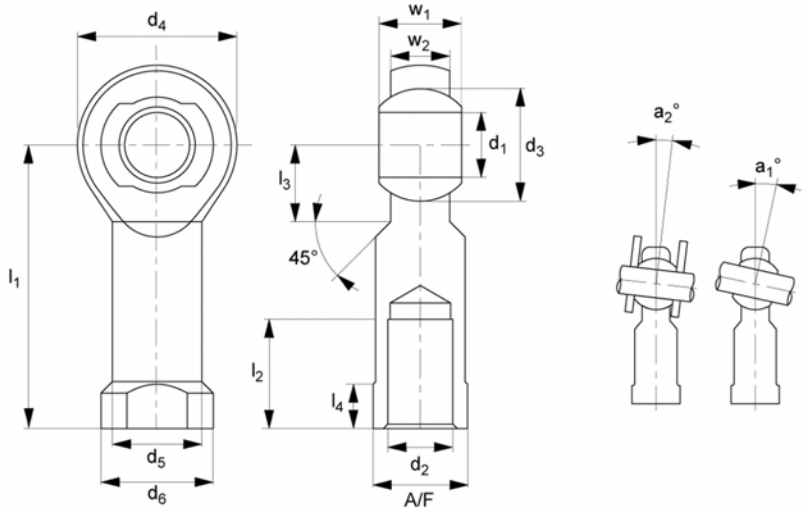



Features

- The female threaded housing makes it simple to connect to a corresponding component.
- It offers a long-lasting finish that is resistant to corrosion and wear
- It can withstand temperatures ranging from -30C to +60C while maintaining load capacity.

Specifications

Material: Stainless Steel, Steel

These Female Heavy Duty Rods join two rods, cables, or other components and end with an Integral Spherical Plain Bearing. They comprise a female threaded housing and an integrated spherical plain bearing. The spherical plain bearing supports both radial and axial loads. It allows for angular misalignment, making it ideal for applications requiring flexibility and load-carrying capabilities.

The rod end ball is supported by a plastic bearing shell constructed of glass fibre-filled nylon/Teflon composite. This design assures a rod end that requires no maintenance. Plain-bearing rod ends have minimal initial movement friction and nearly no clearance. Another benefit of the plastic composition is that it can absorb many foreign particles, thus reducing injury.

It offers a long-lasting finish that is resistant to corrosion and wear. The female threaded housing makes it simple to connect to a corresponding component. It can also withstand temperatures ranging from -30C to +60C while maintaining load capacity. Higher temperatures lower load capacity. It is utilised in steering systems, suspension systems, and linkages for automotive, construction, and industrial automation. applications

Heavy Duty Rod Ends - Female

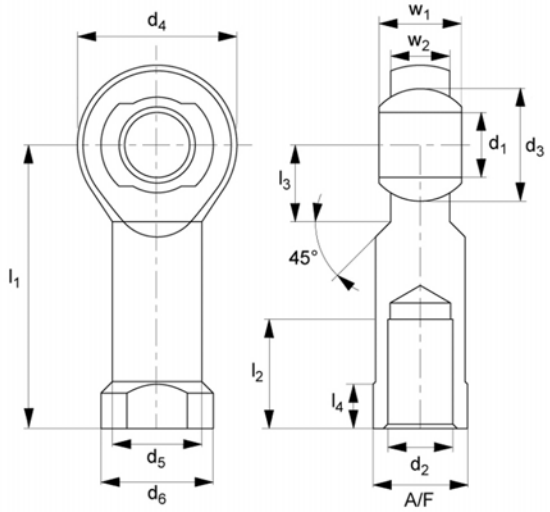



Part Number	Thread hand	d1	l1	d2	d3	l2	d4
20264024	Left Hand	5.0	27.0	M4	11.11	10.0	18.0
20264031	Left Hand	5.0	27.0	M5	11.11	10.0	18.0
20264048	Left Hand	6.0	30.0	M6	12.70	12.0	20.0
20264055	Left Hand	8.0	36.0	M8	15.87	16.0	24.0
20264062	Left Hand	10.0	43.0	M10	19.05	20.0	28.0
20264079	Left Hand	10.0	43.0	M10x1.25	19.05	20.0	28.0
20264086	Left Hand	12.0	50.0	M12	22.22	22.0	32.0
20264093	Left Hand	12.0	50.0	M12x1.25	22.22	22.0	32.0
20264109	Left Hand	14.0	57.0	M14	25.40	25.0	36.0
20264116	Left Hand	16.0	64.0	M16	28.57	28.0	42.0
20264123	Left Hand	16.0	64.0	M16x1.5	28.57	28.0	42.0
20264130	Left Hand	18.0	71.0	M18x1.5	31.75	32.0	46.0
20264147	Left Hand	20.0	77.0	M20x1.5	34.92	33.0	50.0
20264154	Left Hand	22.0	84.0	M22x1.5	38.10	37.0	54.0
20264161	Left Hand	25.0	94.0	M24x2.0	42.85	42.0	60.0
20264178	Left Hand	30.0	110.0	M30x2.0	50.80	51.0	70.0
20264185	Left Hand	30.0	110.0	M27x2.0	50.80	51.0	70.0
20264192	Right Hand	5.0	27.0	M4	11.11	10.0	18.0

Heavy Duty Rod Ends - Female

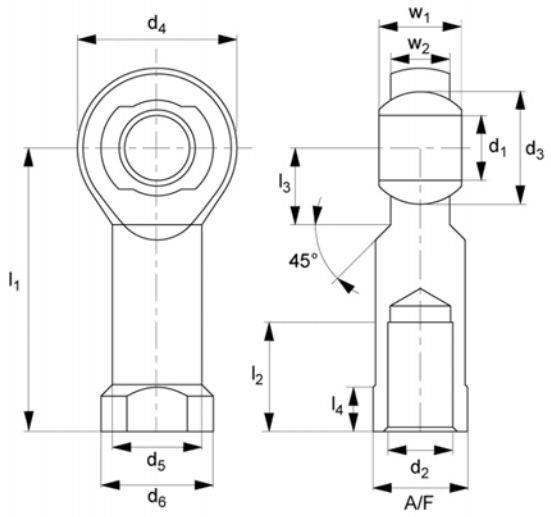



Part Number	Thread hand	d1	l1	d2	d3	l2	d4
20264208	Right Hand	5.0	27.0	M5	11.11	10.0	18.0
20264215	Right Hand	6.0	30.0	M6	12.70	12.0	20.0
20264222	Right Hand	8.0	36.0	M8	15.87	16.0	24.0
20264239	Right Hand	10.0	43.0	M10	19.05	20.0	28.0
20264246	Right Hand	10.0	43.0	M10x1.25	19.05	20.0	28.0
20264253	Right Hand	12.0	50.0	M12	22.22	22.0	32.0
20264260	Right Hand	12.0	50.0	M12x1.25	22.22	22.0	32.0
20264277	Right Hand	14.0	57.0	M14	25.40	25.0	36.0
20264284	Right Hand	16.0	64.0	M16	28.57	28.0	42.0
20264291	Right Hand	16.0	64.0	M16x1.5	28.57	28.0	42.0
20264307	Right Hand	18.0	71.0	M18x1.5	31.75	32.0	46.0
20264314	Right Hand	20.0	77.0	M20x1.5	34.92	33.0	50.0
20264321	Right Hand	22.0	84.0	M22x1.5	38.10	37.0	54.0
20264338	Right Hand	25.0	94.0	M24x2.0	42.85	42.0	60.0
20264345	Right Hand	30.0	110.0	M30x2.0	50.80	51.0	70.0
20264352	Right Hand	30.0	110.0	M27x2.0	50.80	51.0	70.0
20264727	Left Hand	5.0	36.0	M4	11.11	10.0	18.0
20264734	Left Hand	5.0	36.0	M5	11.11	10.0	18.0

Heavy Duty Rod Ends - Female

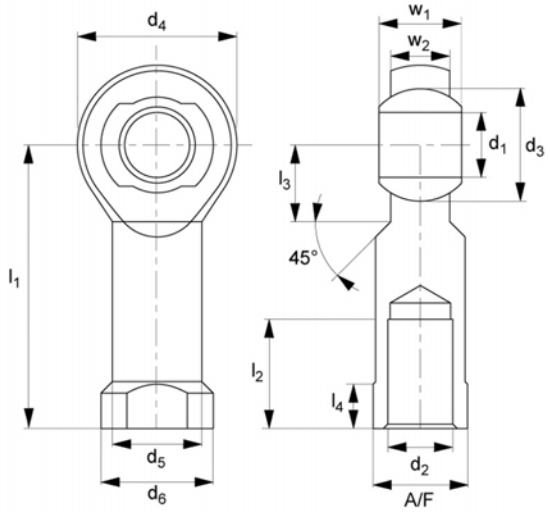



Part Number	Thread hand	d1	l1	d2	d3	l2	d4
20264741	Left Hand	6.0	40.0	M6	12.7	12.0	20.0
20264758	Left Hand	8.0	48.0	M8	15.87	16.0	24.0
20264765	Left Hand	10.0	57.0	M10	19.05	20.0	28.0
20264772	Left Hand	10.0	57.0	M10x1.25	19.05	20.0	28.0
20264789	Left Hand	12.0	66.0	M12	22.22	22.0	32.0
20264796	Left Hand	12.0	66.0	M12x1.25	22.22	22.0	32.0
20264802	Left Hand	14.0	75.0	M14	25.4	25.0	36.0
20264819	Left Hand	16.0	85.0	M16	28.57	28.0	42.0
20264826	Left Hand	16.0	85.0	M16x1.5	28.57	28.0	42.0
20264833	Left Hand	18.0	94.0	M18x1.5	31.75	32.0	46.0
20264840	Left Hand	20.0	102.0	M20x1.5	34.92	33.0	50.0
20264857	Left Hand	22.0	111.0	M22x1.5	38.0	37.0	54.0
20264864	Left Hand	25.0	124.0	M24x2.0	42.85	42.0	60.0
20264871	Left Hand	30.0	145.0	M30x2.0	50.8	51.0	70.0
20265144	Left Hand	30.0	145.0	M27x2.0	50.8	51.0	70.0
20264888	Right Hand	5.0	36.0	M4	11.11	10.0	18.0
20264895	Right Hand	5.0	36.0	M5	11.11	10.0	18.0
20264901	Right Hand	6.0	40.0	M6	12.7	12.0	20.0

Heavy Duty Rod Ends - Female

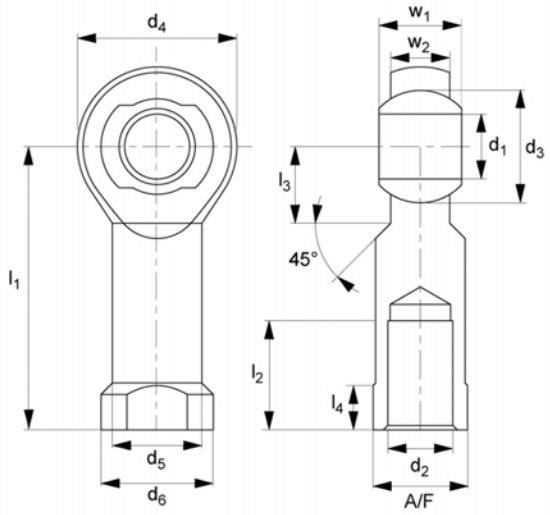



Part Number	Thread hand	d1	l1	d2	d3	l2	d4
20264918	Right Hand	8.0	48.0	M8	15.87	16.0	24.0
20264925	Right Hand	10.0	57.0	M10	19.05	20.0	28.0
20264932	Right Hand	10.0	57.0	M10x1.25	19.05	20.0	28.0
20264949	Right Hand	12.0	66.0	M12	22.22	22.0	32.0
20264956	Right Hand	12.0	66.0	M12x1.25	22.22	22.0	32.0
20264963	Right Hand	14.0	75.0	M14	25.4	25.0	36.0
20264970	Right Hand	16.0	85.0	M16	28.57	28.0	42.0
20264987	Right Hand	16.0	85.0	M16x1.5	28.57	28.0	42.0
20264994	Right Hand	18.0	94.0	M18x1.5	31.75	32.0	46.0
20265007	Right Hand	20.0	102.0	M20x1.5	34.92	33.0	50.0
20265014	Right Hand	22.0	111.0	M22x1.5	38.0	37.0	54.0
20265021	Right Hand	25.0	124.0	M24x2.0	42.85	42.0	60.0
20265038	Right Hand	30.0	145.0	M30x2.0	50.8	51.0	70.0
20265137	Right Hand	30.0	145.0	M27x2.0	50.8	51.0	70.0

Heavy Duty Rod Ends - Male

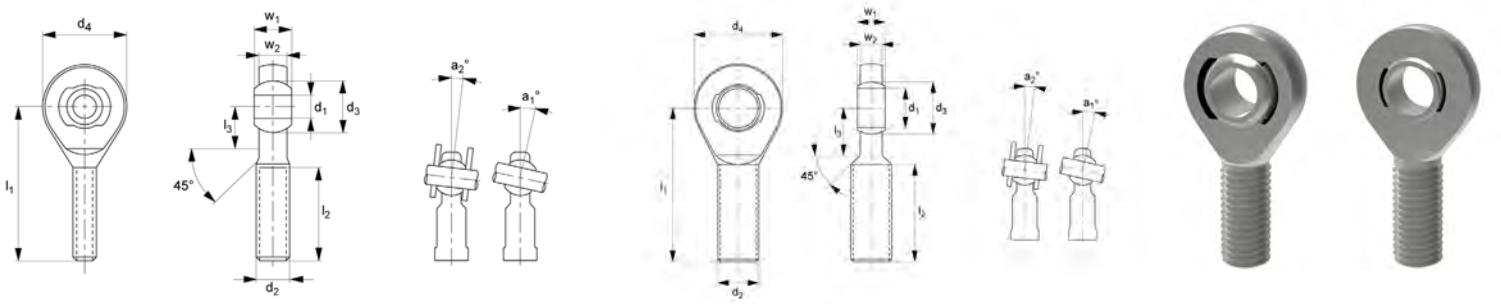

Features

- It is ideal for applications requiring flexibility and load-carrying capabilities.
- Heavy-duty plain-bearing rod ends feature less initial movement friction and almost no clearance.
- It can endure temperatures ranging from -30C to +60C without losing load capacity.

Specifications

Material: Steel

These Male Heavy Duty Rods end with Integral Spherical Plain Bearing and are used to connect two rods, cables, or other components. They are made up of a threaded male stud on one end and an integrated spherical plain bearing on the other. The spherical plain bearing allows for angular misalignment and accepts radial and axial loads, making it ideal for applications requiring flexibility and load-carrying capabilities.

The rod end ball moves on a plastic bearing shell made of a glass fibre-filled nylon/Teflon composite. This design ensures a maintenance-free rod end. Heavy-duty plain-bearing rod ends feature less initial movement friction and almost no clearance. Another advantage of the plastic substance is that it can absorb numerous foreign particles, preventing harm.

It is threaded into the corresponding component. It can also endure temperatures ranging from -30C to +60C without losing load capacity. Higher temperatures lower load capacity. It is utilised in steering systems, suspension systems, and linkages for automotive, construction, and industrial automation applications.

Heavy Duty Rod Ends - Male

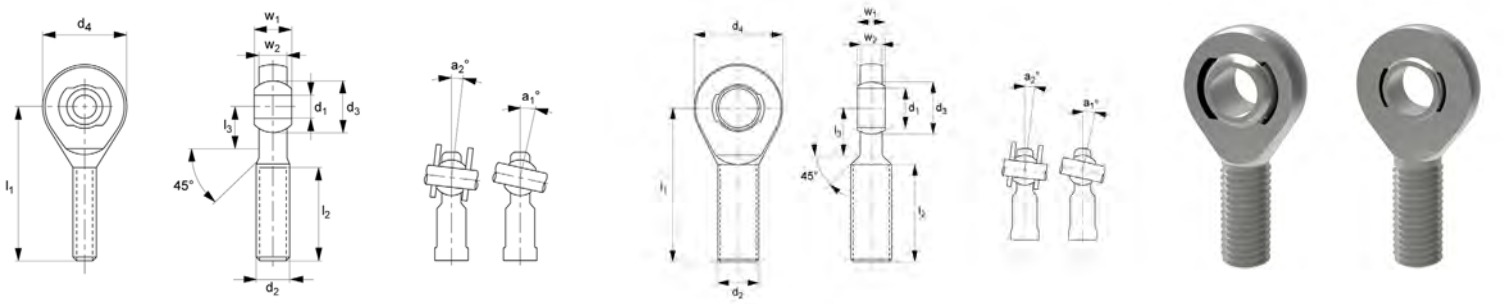

Part Number	Thread hand	d1	l1	d2	d3	l2	d4
20263782	Left Hand	5.0	33.0	M5	11.11	20.0	18.0
20263799	Left Hand	6.0	36.0	M6	12.70	22.0	20.0
20263805	Left Hand	8.0	42.0	M8	15.87	25.0	24.0
20263812	Left Hand	10.0	48.0	M10	19.05	29.0	28.0
20263829	Left Hand	12.0	54.0	M12	22.22	33.0	32.0
20263836	Left Hand	14.0	60.0	M14	25.40	36.0	36.0
20263843	Left Hand	16.0	66.0	M16	28.57	40.0	42.0
20263850	Left Hand	18.0	72.0	M18	31.75	44.0	46.0
20263867	Left Hand	20.0	78.0	M20	34.92	47.0	50.0
20263874	Left Hand	22.0	84.0	M22	38.10	51.0	54.0
20263881	Left Hand	25.0	94.0	M24	42.85	57.0	60.0
20263898	Left Hand	30.0	110.0	M30	50.80	66.0	70.0
20263904	Right Hand	5.0	33.0	M5	11.11	20.0	18.0
20263911	Right Hand	6.0	36.0	M6	12.70	22.0	20.0
20263928	Right Hand	8.0	42.0	M8	15.87	25.0	24.0
20263935	Right Hand	10.0	48.0	M10	19.05	29.0	28.0
20263942	Right Hand	12.0	54.0	M12	22.22	33.0	32.0
20263959	Right Hand	14.0	60.0	M14	25.40	36.0	36.0
20263966	Right Hand	16.0	66.0	M16	28.57	40.0	42.0
20263973	Right Hand	18.0	72.0	M18	31.75	44.0	46.0
20263980	Right Hand	20.0	78.0	M20	34.92	47.0	50.0
20263997	Right Hand	22.0	84.0	M22	38.10	51.0	54.0
20264000	Right Hand	25.0	94.0	M24	42.85	57.0	60.0

Heavy Duty Rod Ends - Male

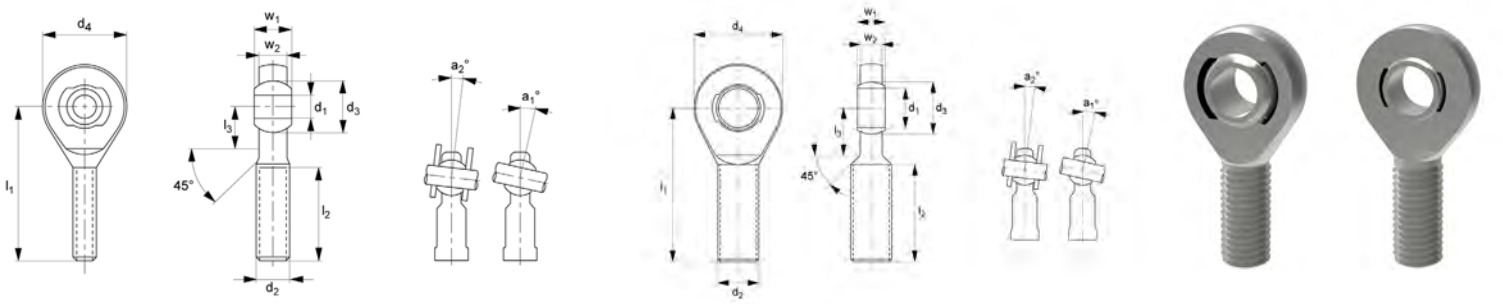

Part Number	Thread hand	d1	l1	d2	d3	l2	d4
20264017	Right Hand	30.0	110.0	M30	50.75	66.0	70.0
20264369	Left Hand	6.0	36.0	M6	10.0	22.0	20.0
20264376	Left Hand	8.0	42.0	M8	13.0	25.0	23.0
20264383	Left Hand	10.0	48.0	M10	16.0	29.0	28.0
20264390	Left Hand	12.0	54.0	M12	18.0	33.0	32.0
20264406	Left Hand	15.0	63.0	M14	22.0	33.0	38.0
20264413	Left Hand	17.0	69.0	M16	25.0	40.0	44.0
20264420	Left Hand	20.0	78.0	M20	29.0	47.0	51.0
20264437	Left Hand	25.0	94.0	M24	35.5	57.0	62.0
20264444	Left Hand	30.0	110.0	M30	40.7	66.0	70.0
20264451	Left Hand	35.0	140.0	M36	47.0	92.0	82.0
20264468	Left Hand	40.0	145.0	M42	53.0	94.0	92.0
20264475	Left Hand	40.0	150.0	M39	53.0	99.0	92.0
20264482	Left Hand	45.0	165.0	M45	60.0	100.0	102.0
20264499	Left Hand	45.0	163.0	M42	60.0	98.0	102.0
20264505	Left Hand	50.0	195.0	M52	66.0	120.0	112.0
20264512	Left Hand	50.0	185.0	M45	66.0	110.0	112.0
20264529	Left Hand	60.0	225.0	M60	80.0	140.0	135.0
20264536	Left Hand	60.0	210.0	M52	80.0	125.0	135.0
20264543	Right Hand	6.0	36.0	M6	10.0	22.0	20.0
20264550	Right Hand	8.0	42.0	M8	13.0	25.0	23.0
20264567	Right Hand	10.0	48.0	M10	16.0	29.0	28.0
20264574	Right Hand	12.0	54.0	M12	18.0	33.0	32.0

Heavy Duty Rod Ends - Male

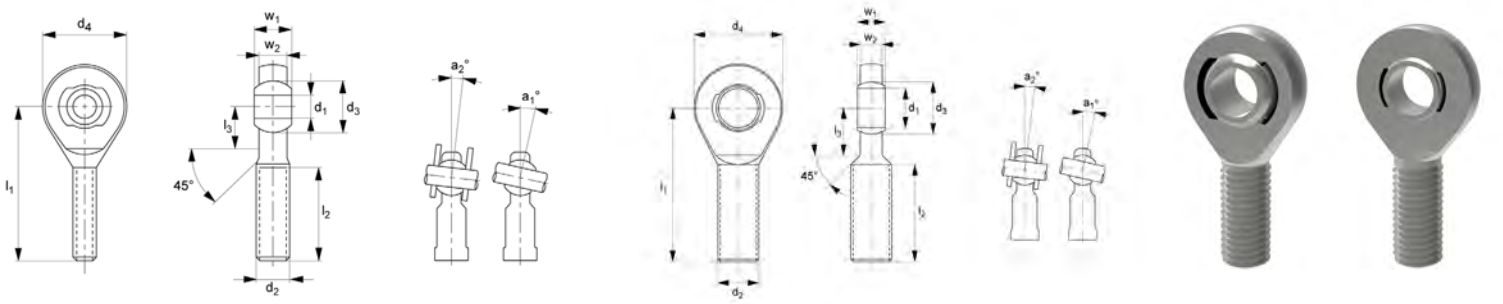

Part Number	Thread hand	d1	l1	d2	d3	l2	d4
20264581	Right Hand	15.0	63.0	M14	22.0	33.0	38.0
20264598	Right Hand	17.0	69.0	M16	25.0	40.0	44.0
20264604	Right Hand	20.0	78.0	M20	29.0	47.0	51.0
20264611	Right Hand	25.0	94.0	M24	35.5	57.0	62.0
20264628	Right Hand	30.0	110.0	M30	40.7	66.0	70.0
20264635	Right Hand	35.0	140.0	M36	47.0	92.0	82.0
20264642	Right Hand	40.0	145.0	M42	53.0	94.0	92.0
20264659	Right Hand	40.0	150.0	M39	53.0	99.0	92.0
20264666	Right Hand	45.0	165.0	M45	60.0	100.0	102.0
20264673	Right Hand	45.0	163.0	M42	60.0	98.0	102.0
20264680	Right Hand	50.0	195.0	M52	66.0	120.0	112.0
20264697	Right Hand	50.0	185.0	M45	66.0	110.0	112.0
20264703	Right Hand	60.0	225.0	M60	80.0	140.0	135.0
20264710	Right Hand	60.0	210.0	M60	80.0	125.0	

Single Universal Joints

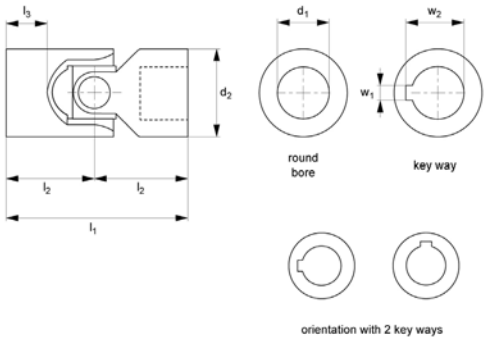

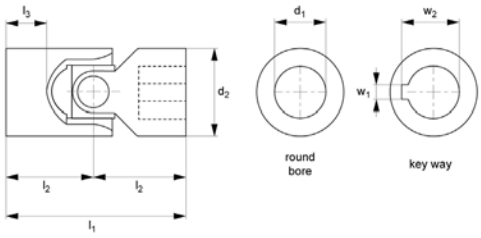



Features

- Used in industrial machinery, and conveyor systems.
- Drive speed of universal joints with journal bearings is available for 1000 rpm and 4000 rpm.
- Available with simple or needle roller bearings that are lubricated for life and require no maintenance.

Specifications

Material: 304 Stainless Steel, Steel

These Single Universal Joints are used when rotational mobility and flexibility between misaligned shafts are required. It transmits torque and rotation between two non-aligned shafts while accommodating angular misalignment.

They are meant to transmit torque and change length while allowing for slight angular misalignments between the input and output shafts. Furthermore, the drive speed of universal joints with journal bearings is available for 1000 rpm and 4000 rpm. Designed to endure large loads and provide consistent performance in harsh conditions.

Available with simple or needle roller bearings that are lubricated for life and require no maintenance. On request, keyed bores or square bores can be provided. It can bend up to 45 degrees per joint, and are precise, silent and smooth running. It may be installed and removed into the application using specific tools. Typical applications include industrial machinery, and conveyor systems.

Single Universal Joints

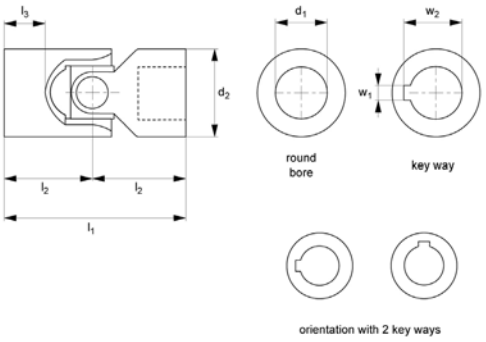

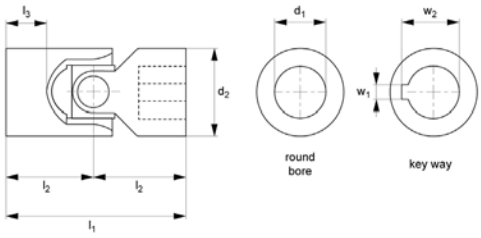



Part Number	Bore dia	d1 tol. H7	d2	l1	l2	l3	Material
20214173	With keyway	10.0	16.0	52.0	26.0	15.0	Steel
20214111	Round bore	10.0	16.0	52.0	26.0	15.0	Steel
20214180	With keyway	12.0	22.0	62.0	31.0	18.0	Steel
20214128	Round Bore	12.0	22.0	62.0	31.0	18.0	Steel
20214197	With keyway	16.0	25.0	74.0	37.0	21.0	Steel
20214135	Round Bore	16.0	25.0	74.0	37.0	21.0	Steel
20214203	With keyway	20.0	32.0	86.0	43.0	24.0	Steel
20214142	Round Bore	20.0	32.0	86.0	43.0	24.0	Steel
20214210	With keyway	25.0	42.0	108.0	54.0	31.0	Steel
20214159	Round Bore	25.0	42.0	108.0	54.0	31.0	Steel
20214807	With keyway	30.0	50.0	132.0	66.0	38.0	Steel
20214791	Round Bore	30.0	50.0	132.0	66.0	38.0	Steel
20214227	With keyway	40.0	70.0	166.0	83.0	47.0	Steel
20214166	Round Bore	40.0	70.0	166.0	83.0	47.0	Steel
20214968	With keyway	6.0	16.0	34.0	17.0	8.0	Steel
20214814	Round bore	6.0	16.0	34.0	17.0	8.0	Steel
20214975	With keyway	8.0	16.0	40.0	20.0	11.0	Steel
20214821	Round bore	8.0	16.0	40.0	20.0	11.0	Steel
20214982	With keyway	10.0	22.0	48.0	24.0	12.0	Steel
20214838	Round bore	10.0	22.0	48.0	24.0	12.0	Steel

Single Universal Joints

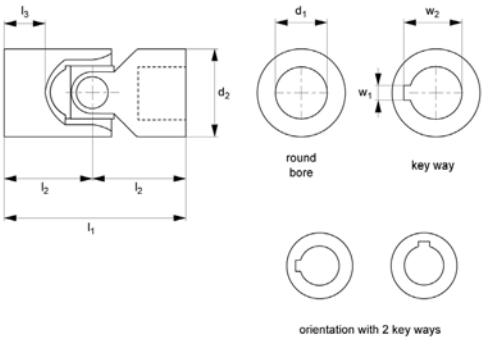

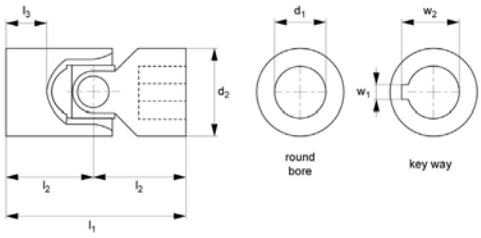



Part Number	Bore dia	d1 tol. H7	d2	l1	l2	l3	Material
20214999	With keyway	12.0	25.0	56.0	28.0	13.0	Steel
20214845	Round bore	12.0	25.0	56.0	28.0	13.0	Steel
20217136	Square bore	12.0	25.0	56.0	28.0	13.0	Steel
20215002	With keyway	14.0	28.0	60.0	30.0	14.0	Steel
20214852	Round bore	14.0	28.0	60.0	30.0	14.0	Steel
20215019	With keyway	16.0	32.0	68.0	34.0	16.0	Steel
20214869	Round bore	16.0	32.0	68.0	34.0	16.0	Steel
20217310	Square bore	16.0	32.0	68.0	34.0	16.0	Steel
20215026	With keyway	18.0	36.0	74.0	37.0	17.0	Steel
20214876	Round bore	18.0	36.0	74.0	37.0	17.0	Steel
20215033	With keyway	20.0	42.0	82.0	41.0	18.0	Steel
20214883	Round bore	20.0	42.0	82.0	41.0	18.0	Steel
20215040	With keyway	22.0	45.0	95.0	47.5	22.0	Steel
20214890	Round bore	22.0	45.0	95.0	47.5	22.0	Steel
20215057	With keyway	25.0	50.0	108.0	54.0	26.0	Steel
20214906	Round bore	25.0	50.0	108.0	54.0	26.0	Steel
20215064	With keyway	30.0	58.0	122.0	61.0	29.0	Steel
20214913	Round bore	30.0	58.0	122.0	61.0	29.0	Steel
20215071	With keyway	32.0	58.0	130.0	65.0	33.0	Steel
20214920	Round bore	32.0	58.0	130.0	65.0	33.0	Steel
20215088	With keyway	35.0	70.0	140.0	70.0	35.0	Steel

Single Universal Joints

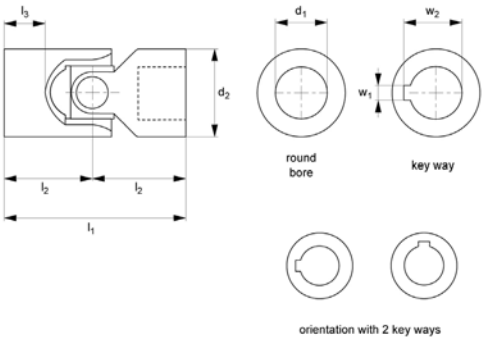

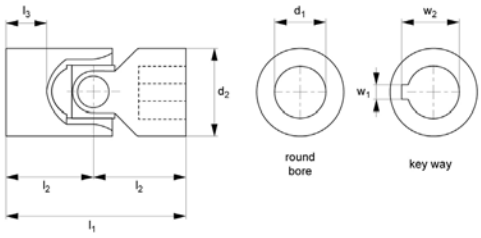



Part Number	Bore dia	d1 tol. H7	d2	l1	l2	l3	Material
20214937	Round bore	35.0	70.0	140.0	70.0	35.0	Steel
20215095	With keyway	40.0	80.0	160.0	80.0	39.0	Steel
20214944	Round bore	40.0	80.0	160.0	80.0	39.0	Steel
20215101	With keyway	50.0	95.0	190.0	95.0	46.0	Steel
20214951	Round bore	50.0	95.0	190.0	95.0	46.0	Steel
20214296	With keyway	10.0	22.0	48.0	24.0	12.0	Steel
20214234	Round bore	10.0	22.0	48.0	24.0	12.0	Steel
20214302	With keyway	12.0	25.0	56.0	28.0	13.0	Steel
20214241	Round Bore	12.0	25.0	56.0	28.0	13.0	Steel
20215453	With keyway	14.0	28.0	60.0	30.0	14.0	Steel
20215385	Round Bore	14.0	28.0	60.0	30.0	14.0	Steel
20214319	With keyway	16.0	32.0	68.0	34.0	16.0	Steel
20214258	Round Bore	16.0	32.0	68.0	34.0	16.0	Steel
20215460	With keyway	18.0	36.0	74.0	37.0	17.0	Steel
20215392	Round Bore	18.0	36.0	74.0	37.0	17.0	Steel
20214326	With keyway	20.0	42.0	82.0	41.0	18.0	Steel
20214265	Round Bore	20.0	42.0	82.0	41.0	18.0	Steel
20215477	With keyway	22.0	45.0	95.0	47.5	22.0	Steel
20215408	Round Bore	22.0	45.0	95.0	47.5	22.0	Steel
20214333	With keyway	25.0	50.0	108.0	54.0	26.0	Steel
20214272	Round Bore	25.0	50.0	108.0	54.0	26.0	Steel

Single Universal Joints

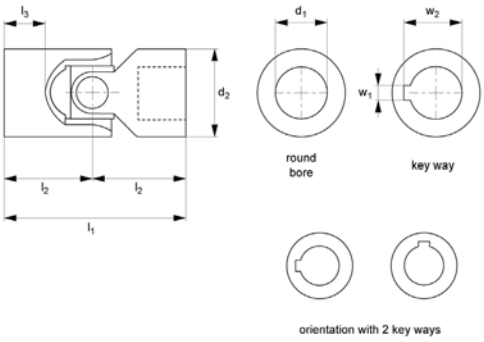

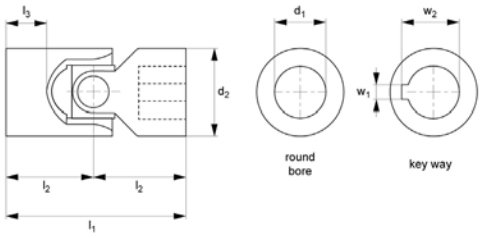



Part Number	Bore dia	d1 tol. H7	d2	l1	l2	l3	Material
20215484	With keyway	30.0	58.0	122.0	61.0	29.0	Steel
20215415	Round Bore	30.0	58.0	122.0	61.0	29.0	Steel
20214340	With keyway	32.0	58.0	130.0	65.0	33.0	Steel
20214289	Round Bore	32.0	58.0	130.0	65.0	33.0	Steel
20215491	With keyway	35.0	70.0	140.0	70.0	35.0	Steel
20215422	Round Bore	35.0	70.0	140.0	70.0	35.0	Steel
20215507	With keyway	40.0	80.0	160.0	80.0	39.0	Steel
20215439	Round Bore	40.0	80.0	160.0	80.0	39.0	Steel
20215514	With keyway	50.0	95.0	190.0	95.0	46.0	Steel
20215446	Round Bore	50.0	95.0	190.0	95.0	46.0	Steel
20216269	With keyway	6.0	16.0	34.0	17.0	8.0	304 Stainless Steel
20215149	Round bore	6.0	16.0	34.0	17.0	8.0	304 Stainless Steel
20216450	With keyway	8.0	16.0	40.0	20.0	11.0	304 Stainless Steel
20215156	Round Bore	8.0	16.0	40.0	20.0	11.0	304 Stainless Steel
20216429	With keyway	10.0	22.0	48.0	24.0	12.0	304 Stainless Steel
20215163	Round Bore	10.0	22.0	48.0	24.0	12.0	304 Stainless Steel
20216481	With keyway	12.0	25.0	56.0	28.0	13.0	304 Stainless Steel
20215170	Round Bore	12.0	25.0	56.0	28.0	13.0	304 Stainless Steel
20216122	With keyway	16.0	32.0	68.0	34.0	16.0	304 Stainless Steel
20215187	Round Bore	16.0	32.0	68.0	34.0	16.0	304 Stainless Steel
20215330	With keyway	20.0	42.0	82.0	41.0	18.0	304 Stainless Steel

Single Universal Joints

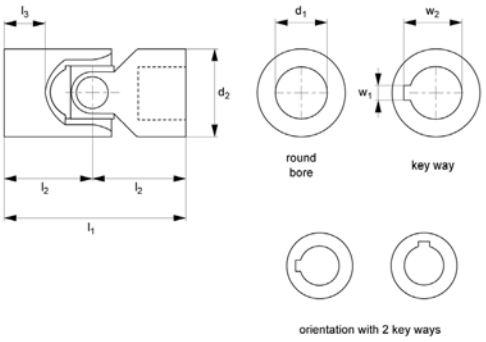

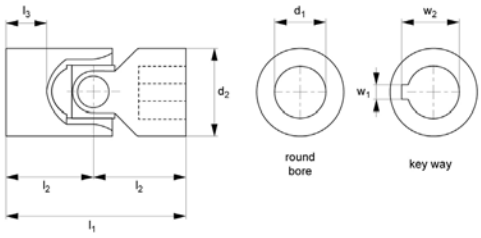



Part Number	Bore dia	d1 tol. H7	d2	l1	l2	l3	Material
20215194	Round Bore	20.0	42.0	82.0	41.0	18.0	304 Stainless Steel
20215347	With keyway	25.0	50.0	108.0	54.0	26.0	304 Stainless Steel
20215200	Round Bore	25.0	50.0	108.0	54.0	26.0	304 Stainless Steel
20216238	With keyway	30.0	58.0	122.0	61.0	29.0	304 Stainless Steel
20215217	Round Bore	30.0	58.0	122.0	61.0	29.0	304 Stainless Steel

Single Universal Joint - Unbored Solid Ends

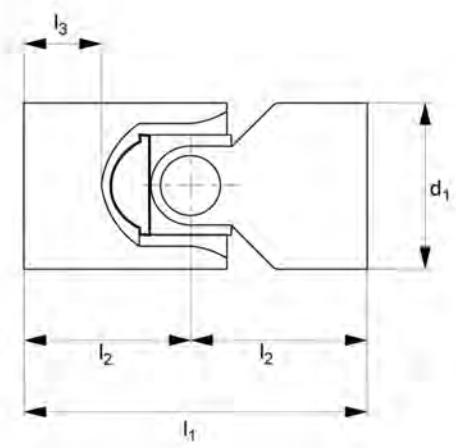



Features

- It transmits torque and rotation between two non-aligned shafts with a maximum joint driving speed of 1000 rpm.
- It can bend up to 45 degrees per joint.
- Used in automotive drive shafts, industrial machinery, and steering systems.

Specifications

Material: 304 Stainless Steel

These Single Universal Joints with unbored solid ends are used when rotational mobility and flexibility are required between solid and unbored shafts. They provide a strong and dependable connection, making them suited for heavy-duty applications.

Designed to transmit torque and rotation between two non-aligned shafts while accommodating misalignment, with a maximum joint driving speed of 1000 rpm. They are made to deliver smooth and dependable rotation while minimising friction and wear.

It can bend up to 45 degrees per joint and is accurate, silent, and smooth operating. It may be installed and removed from the application using specific tools. Typical applications include automotive drive shafts, industrial machinery, and steering systems.

Single Universal Joint - Unbored Solid Ends

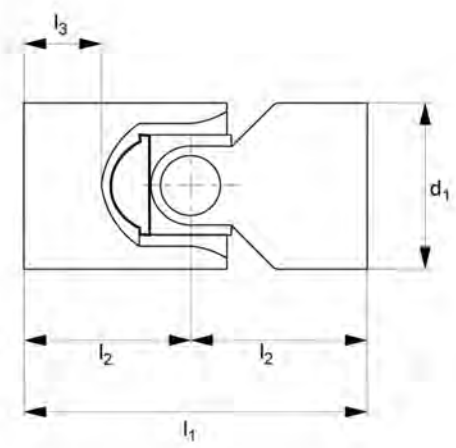

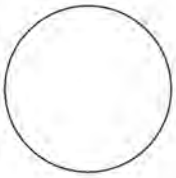



Part Number	d tol. h4	l1	l2	l3	Material
20216498	13.0	43.0	21.0	14.0	304 Stainless Steel
20216504	17.0	53.0	26.0	18.0	304 Stainless Steel
20216511	20.0	63.0	31.0	21.0	304 Stainless Steel
20216528	25.0	57.0	28.0	16.0	304 Stainless Steel
20216467	25.0	75.0	37.0	25.0	304 Stainless Steel
20216535	32.0	87.0	43.0	26.0	304 Stainless Steel
20216382	40.0	109.0	54.0	34.0	304 Stainless Steel
20216191	50.0	133.0	66.0	42.0	304 Stainless Steel

Double Universal Joints

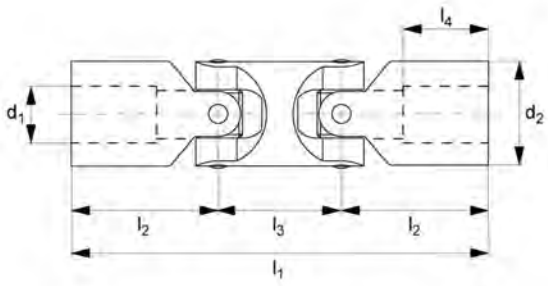

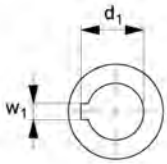



Features

- It unites two single joints to allow for larger angular misalignment between shafts.
- It endures heavy loads and provide long-lasting performance in harsh working situations.
- It can bend up to 45 degrees per joint.

Specifications

Material: 304 Stainless Steel

These Double Universal Joints, also known as double cardan joints, are mechanical components that unite two single joints to allow for even larger angular misalignment between shafts. Their unique form allows for torque's smooth and effective transfer over extended distances and at substantial angles.

They can transmit power smoothly and effectively even when the connecting shafts are not precisely aligned. They were created to endure heavy loads and provide long-lasting performance in harsh working situations.

It can bend up to 45 degrees per joint and is accurate, silent, and smooth operating. It may be installed and removed from the application using appropriate tools. Typical applications include industrial machinery, and conveyor systems.

Double Universal Joints

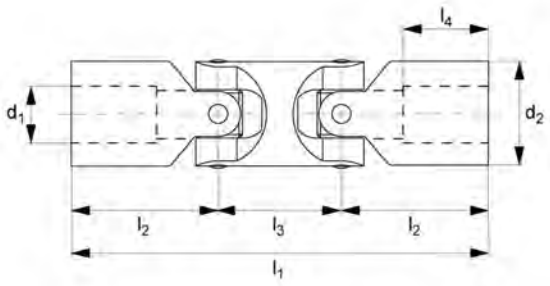

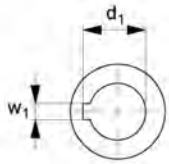



Part Number	Bore dia	d1 tol. H7	d2	l1	l2	l3	w1	Material
20216542	Keyway	6.0	16.0	56.0	17.0	22.0	8.0	304 Stainless Steel
20215224	Round bore	6.0	16.0	56.0	17.0	22.0	8.0	304 Stainless Steel
20216559	Keyway	8.0	16.0	62.0	20.0	22.0	11.0	304 Stainless Steel
20215231	Round Bore	8.0	16.0	62.0	20.0	22.0	11.0	304 Stainless Steel
20215378	Keyway	10.0	22.0	74.0	24.0	26.0	12.0	304 Stainless Steel
20215248	Round Bore	10.0	22.0	74.0	24.0	26.0	12.0	304 Stainless Steel
20216566	Keyway	12.0	25.0	86.0	28.0	30.0	13.0	304 Stainless Steel
20215255	Round Bore	12.0	25.0	86.0	28.0	30.0	13.0	304 Stainless Steel
20216573	Keyway	16.0	32.0	104.0	34.0	36.0	16.0	304 Stainless Steel
20215262	Round Bore	16.0	32.0	104.0	34.0	36.0	16.0	304 Stainless Steel
20216214	Keyway	20.0	42.0	128.0	41.0	46.0	18.0	304 Stainless Steel
20215279	Round Bore	20.0	42.0	128.0	41.0	46.0	18.0	304 Stainless Steel
20215354	Keyway	25.0	50.0	163.0	54.0	55.0	26.0	304 Stainless Steel
20215286	Round Bore	25.0	50.0	163.0	54.0	55.0	26.0	304 Stainless Steel
20216207	Keyway	30.0	58.0	190.0	61.0	68.0	29.0	304 Stainless Steel
20215293	Round Bore	30.0	58.0	190.0	61.0	68.0	29.0	304 Stainless Steel

Double Universal Joints - Unbored Solid Ends

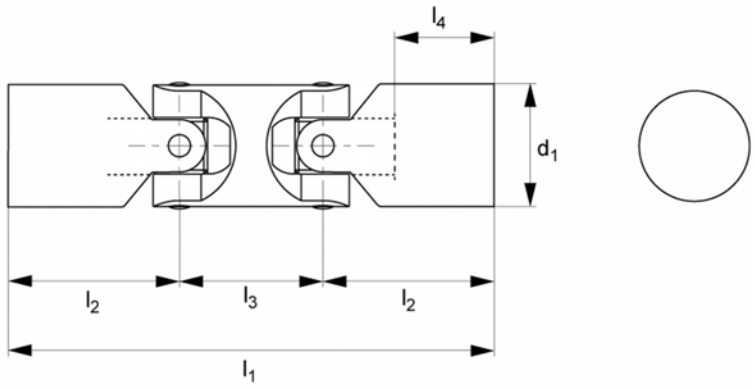



Features

- Used for bending angles or when two shafts are offset with respect to each other.
- It has a maximum driving speed of 1000rpm for the ball-bearing joints.
- It can bend up to 45 degrees per joint.

Specifications

Material: 304 Stainless Steel

These Double Universal Joints with unbored solid ends are mechanical components used when significant bending angles are required or when two shafts are offset with respect to each other. The distinct form makes them perfect for demanding applications requiring high torque capacity, resistance to wear and tear, and the ability to endure significant misalignment angles.

They are designed to withstand enormous loads and provide long-lasting performance in difficult working environments. It has a maximum driving speed of 1000rpm for the ball-bearing joints.

It can bend up to 45 degrees per joint; it is accurate, silent, and smooth in motion. It may be installed and removed from the application using the appropriate tools. Typical applications include industrial machinery, and conveyor systems.

Double Universal Joints - Unbored Solid Ends

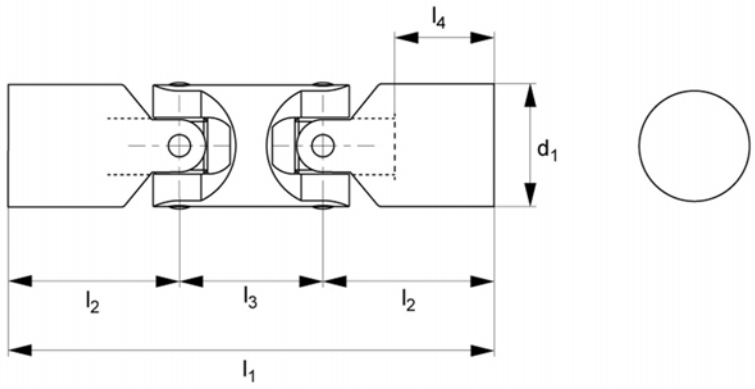



Part Number	d tol. h4	l1	l2	l3	w1	Material
20216580	13.0	61.0	21.0	18.0	14.0	304 Stainless Steel
20216597	17.0	63.0	20.0	22.0	12.0	304 Stainless Steel
20216603	17.0	75.0	26.0	22.0	18.0	304 Stainless Steel
20216351	20.0	89.0	31.0	26.0	21.0	304 Stainless Steel
20216610	25.0	87.0	28.0	30.0	16.0	304 Stainless Steel
20216627	25.0	105.0	37.0	30.0	25.0	304 Stainless Steel
20216634	32.0	125.0	43.0	38.0	26.0	304 Stainless Steel
20216641	40.0	155.0	54.0	46.0	34.0	304 Stainless Steel
20216658	50.0	189.0	66.0	56.0	42.0	304 Stainless Steel
20216665	60.0	237.0	83.0	70.0	53.0	304 Stainless Steel

Bellows

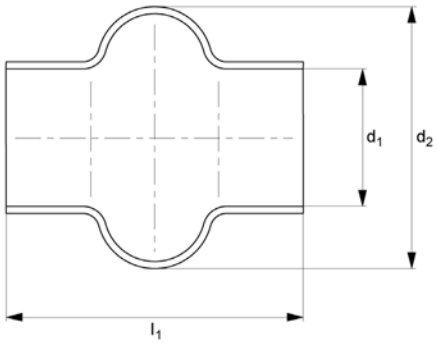

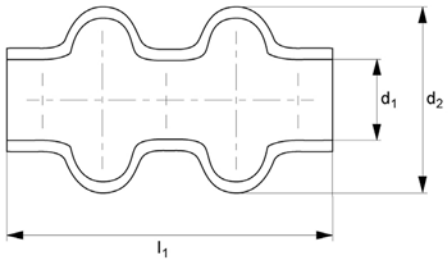



Features

- It expands and contracts in response to movement and pressure changes.
- It should be tied at both ends with two cable ties.
- Used in the automotive, HVAC, and manufacturing industries.

Specifications

Material: PVC, Rubber

Bellows are used in applications that demand flexibility, sealing, and protection. They are used for joints and are available for double joints. Designed to expand and contract in response to movement and pressure changes.

It can account for thermal expansion, vibration, misalignment, and other variables that might cause stress or damage to the linked parts. They shield the application from dirt, dust, moisture, and other pollutants, assuring longevity. They can be filled with grease to provide friction bearings with long-term lubrication.

It should be tied at both ends with two cable ties (not included). They are commonly used in the automotive, HVAC, and manufacturing industries.

Bellows

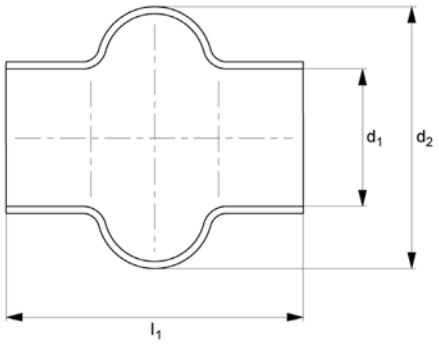

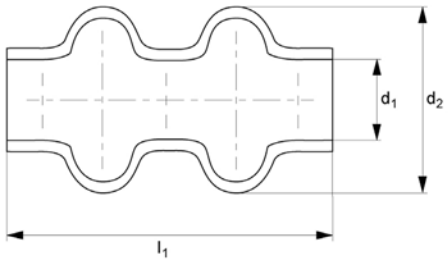



Part Number	Bellow Type	To suit joint of o.d	d1	d2	l1	Material
20179854	Single universal joint	16.0	15.0	28.0	34.0	Rubber
20179892	Single universal joint	18.0	16.5	32.0	40.0	Rubber
20179908	Single universal joint	22.0	20.5	40.0	45.0	Rubber
20179861	Single universal joint	26.0	24.5	48.0	50.0	Rubber
20179915	Single universal joint	29.0	27.5	52.0	56.0	Rubber
20179878	Single universal joint	32.0	30.5	56.0	65.0	Rubber
20179922	Single universal joint	37.0	35.5	66.0	72.0	Rubber
20179939	Single universal joint	42.0	40.0	75.0	82.0	Rubber
20179946	Single universal joint	47.0	45.0	84.0	95.0	Rubber
20179885	Single universal joint	52.0	50.0	92.0	108.0	Rubber
20179953	Single universal joint	58.0	56.0	100.0	122.0	Rubber
20179977	Double universal joint	16.0	16.0	35.0	55.0	PVC
20179984	Double universal joint	22.0	20.0	36.0	65.0	PVC
20179991	Double universal joint	25.0	24.0	44.0	70.0	PVC
20180003	Double universal joint	28.0	28.0	51.0	80.0	PVC
20180010	Double universal joint	32.0	32.0	62.0	90.0	PVC
20179960	Double universal joint	50.0	50.0	90.0	155.0	PVC

Telescopic Universal Joints

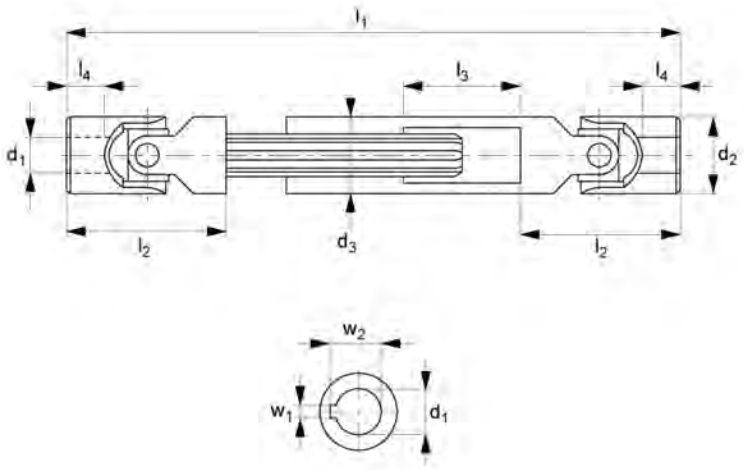



Features

- It transfers torque and modifies length while accommodating minor angular misalignments between the input and output shafts.
- It has a maximum bending angle of 45 per joint.
- Used in industrial machinery, and conveyor systems.

Specifications

Material: Steel

These Telescopic universal joints combine the functions of a universal joint and a telescopic shaft. These joints comprise two yokes joined by a telescopic shaft, which allows for angular misalignment and compensates for length changes. It allows the joint to expand and retract to accommodate variations in distance between the linked components.

They are designed to transfer torque and modify length while accommodating minor angular misalignments between the input and output shafts. Furthermore, the driving speed of universal joints should not exceed 1000 rpm. Made to withstand heavy loads and offer dependable performance in harsh environments.

It has a maximum bending angle of 45 per joint. It may be inserted and removed using specific tools. Typical applications include industrial machinery, and conveyor systems.

Telescopic Universal Joints

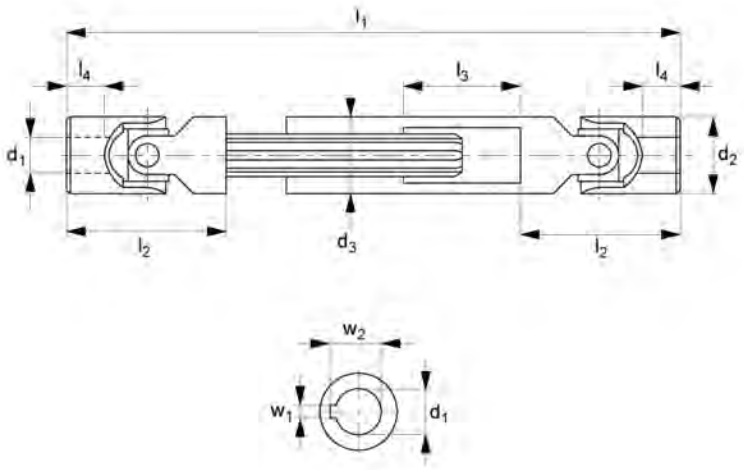



Part Number	d1 tol. H7	d2	d3	l1 min	l1 max	l2	l3 stroke	Material
20213862	10.0	22.0	22.0	140.0	170.0	48.0	30.0	Steel
20213916	10.0	22.0	22.0	160.0	200.0	48.0	40.0	Steel
20213961	10.0	22.0	22.0	180.0	240.0	48.0	60.0	Steel
20214418	10.0	22.0	22.0	230.0	330.0	48.0	100.0	Steel
20213879	12.0	25.0	26.0	160.0	190.0	56.0	30.0	Steel
20213923	12.0	25.0	26.0	180.0	225.0	56.0	45.0	Steel
20213978	12.0	25.0	26.0	200.0	270.0	56.0	70.0	Steel
20214425	12.0	25.0	26.0	220.0	300.0	56.0	80.0	Steel
20214432	12.0	25.0	26.0	250.0	355.0	56.0	105.0	Steel
20214012	12.0	25.0	26.0	280.0	420.0	56.0	140.0	Steel
20214050	12.0	25.0	26.0	300.0	450.0	56.0	150.0	Steel
20214449	14.0	28.0	29.0	170.0	200.0	60.0	30.0	Steel
20214456	14.0	28.0	29.0	180.0	220.0	60.0	40.0	Steel
20214463	14.0	28.0	29.0	200.0	260.0	60.0	60.0	Steel
20214470	14.0	28.0	29.0	220.0	300.0	60.0	80.0	Steel
20214487	14.0	28.0	29.0	250.0	350.0	60.0	100.0	Steel
20214494	14.0	28.0	29.0	280.0	420.0	60.0	140.0	Steel
20214500	14.0	28.0	29.0	300.0	450.0	60.0	150.0	Steel
20214517	14.0	28.0	29.0	350.0	550.0	60.0	200.0	Steel
20214524	14.0	28.0	29.0	400.0	650.0	60.0	250.0	Steel

Telescopic Universal Joints

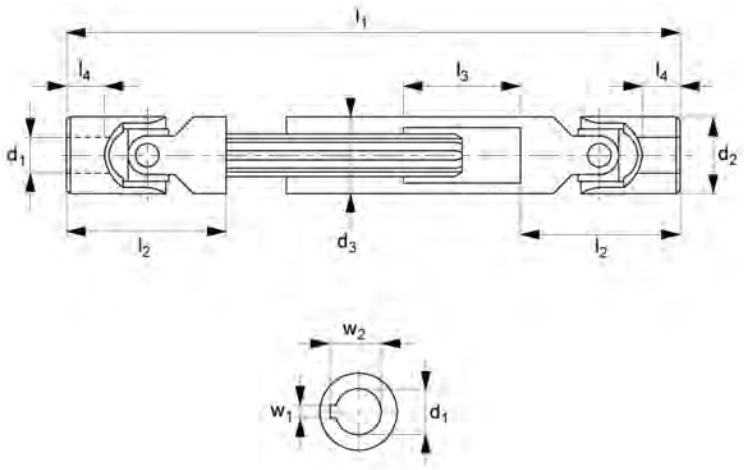



Part Number	d1 tol. H7	d2	d3	l1 min	l1 max	l2	l3 stroke	Material
20213886	16.0	32.0	32.0	190.0	220.0	68.0	30.0	Steel
20213930	16.0	32.0	32.0	210.0	250.0	68.0	40.0	Steel
20213985	16.0	32.0	32.0	240.0	320.0	68.0	80.0	Steel
20214531	16.0	32.0	32.0	250.0	350.0	68.0	100.0	Steel
20214548	16.0	32.0	32.0	275.0	390.0	68.0	115.0	Steel
20214029	16.0	32.0	32.0	300.0	430.0	68.0	130.0	Steel
20214067	16.0	32.0	32.0	380.0	590.0	68.0	210.0	Steel
20214098	16.0	32.0	32.0	400.0	630.0	68.0	230.0	Steel
20214555	18.0	36.0	37.0	230.0	280.0	74.0	50.0	Steel
20214562	18.0	36.0	37.0	250.0	320.0	74.0	70.0	Steel
20214579	18.0	36.0	37.0	270.0	370.0	74.0	100.0	Steel
20214586	18.0	36.0	37.0	290.0	400.0	74.0	110.0	Steel
20214593	18.0	36.0	37.0	300.0	415.0	74.0	115.0	Steel
20214609	18.0	36.0	37.0	400.0	620.0	74.0	220.0	Steel
20214616	18.0	36.0	37.0	500.0	820.0	74.0	320.0	Steel
20213893	20.0	42.0	42.0	250.0	300.0	82.0	50.0	Steel
20213947	20.0	42.0	42.0	270.0	340.0	82.0	70.0	Steel
20213992	20.0	42.0	42.0	290.0	380.0	82.0	90.0	Steel
20214623	20.0	42.0	42.0	320.0	440.0	82.0	120.0	Steel
20214630	20.0	42.0	42.0	380.0	560.0	82.0	180.0	Steel

Telescopic Universal Joints

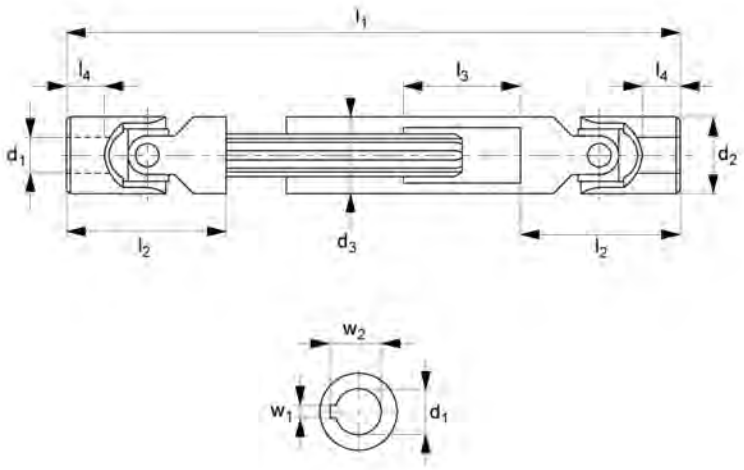



Part Number	d1 tol. H7	d2	d3	l1 min	l1 max	l2	l3 stroke	Material
20214036	20.0	42.0	42.0	420.0	640.0	82.0	220.0	Steel
20214074	20.0	42.0	42.0	500.0	800.0	82.0	300.0	Steel
20214647	22.0	45.0	47.0	250.0	280.0	95.0	30.0	Steel
20214654	22.0	45.0	47.0	270.0	320.0	95.0	50.0	Steel
20214661	22.0	45.0	47.0	290.0	350.0	95.0	60.0	Steel
20214678	22.0	45.0	47.0	330.0	430.0	95.0	100.0	Steel
20214685	22.0	45.0	47.0	350.0	470.0	95.0	120.0	Steel
20214692	22.0	45.0	47.0	470.0	710.0	95.0	240.0	Steel
20213909	25.0	50.0	52.0	295.0	345.0	108.0	50.0	Steel
20213954	25.0	50.0	52.0	310.0	375.0	108.0	65.0	Steel
20214005	25.0	50.0	52.0	350.0	450.0	108.0	100.0	Steel
20214708	25.0	50.0	52.0	380.0	500.0	108.0	120.0	Steel
20214715	25.0	50.0	52.0	420.0	590.0	108.0	170.0	Steel
20214043	25.0	50.0	52.0	460.0	660.0	108.0	200.0	Steel
20214081	25.0	50.0	52.0	500.0	745.0	108.0	245.0	Steel
20214722	30.0	58.0	58.0	330.0	380.0	122.0	50.0	Steel
20214739	30.0	58.0	58.0	350.0	420.0	122.0	70.0	Steel
20214746	30.0	58.0	58.0	370.0	455.0	122.0	85.0	Steel
20214753	30.0	58.0	58.0	400.0	510.0	122.0	110.0	Steel
20214760	30.0	58.0	58.0	450.0	620.0	122.0	170.0	Steel

Telescopic Universal Joints

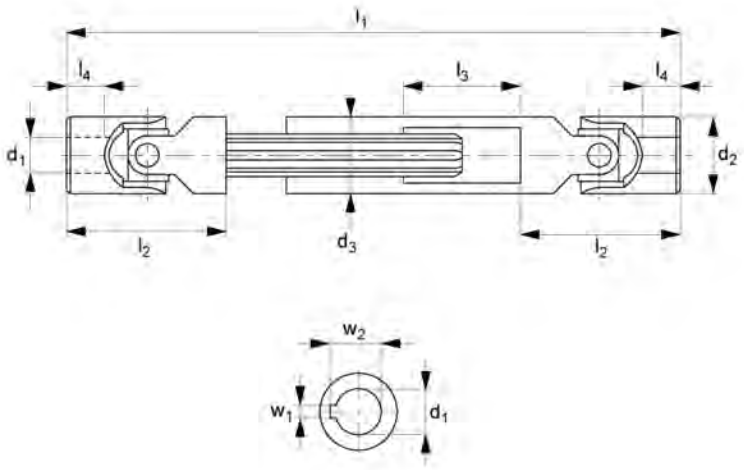



Part Number	d1 tol. H7	d2	d3	l1 min	l1 max	l2	l3 stroke	Material
20214777	30.0	58.0	58.0	500.0	720.0	122.0	220.0	Steel
20214784	30.0	58.0	58.0	540.0	795.0	122.0	255.0	Steel

Machinable Fixture Clamps

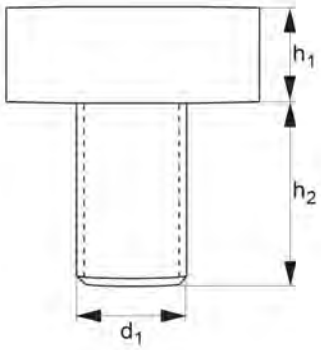

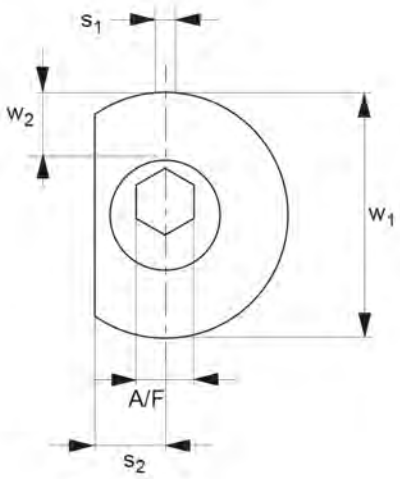



Features

- Used to hold workpieces that are flat, uneven, or round in place during machining operations.
- It comes with cam bolts and a machining screw.
- Used in precision machining, complex workpieces and one-off or low-volume production applications.

Specifications

Material: Mild Steel

These Machinable Fixture Clamps are used to process and hold workpieces that are flat, uneven, or round, in place during machining operations. This assures precision and reproducibility. It has a strong and consistent gripping ability.

It comes with cam bolts and a machining screw to keep the clamp in place while the clamp face is machined to fit the component shape. This guarantees precision as well as stability during machining processes.

Easy to incorporate into machining settings and attach quickly and securely. Used in precision machining, complex workpieces and one-off or low-volume production applications. Please never assume the clamp is tight; always verify the tightened clamp before machining.

Machinable Fixture Clamps

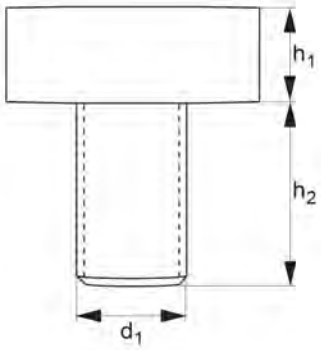

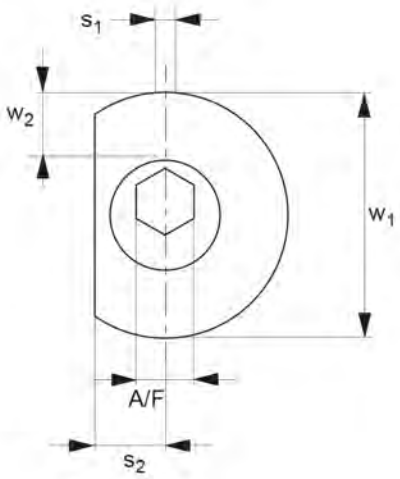



Part Number	d1	h1	h2	Clamping force max. kN	Stroke s1	Stroke s2	w1
20266547	M6	6.4	11.9	3.4	1.0	7.8	24.9
20266554	M10	8.9	18.0	8.9	1.5	10.2	31.2
20266561	M12	11.4	22.9	17.8	2.0	12.7	37.6
20266578	M16	14.0	28.6	26.7	2.5	15.0	43.9

Modular Pitbull Clamps

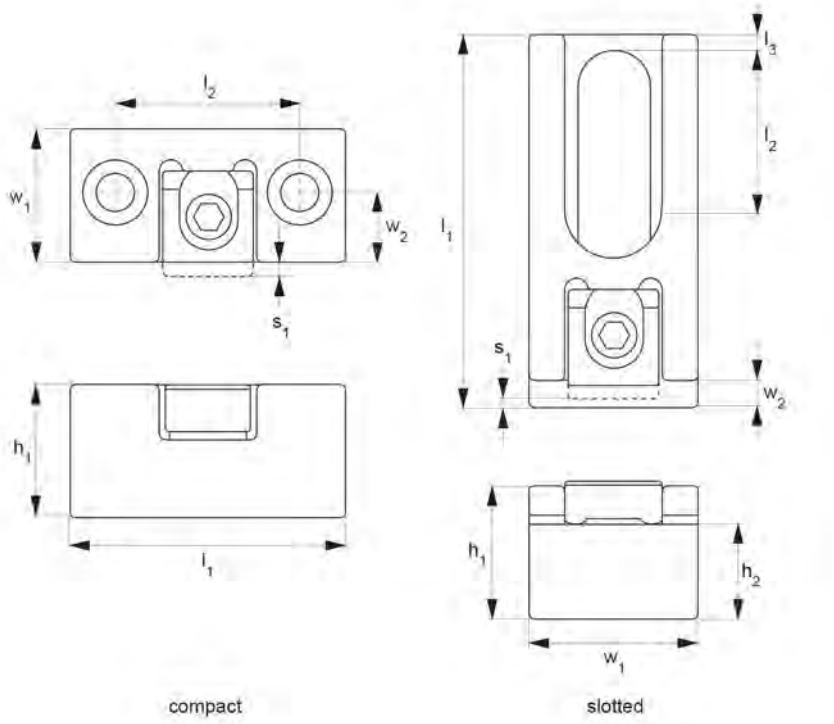



Features

- It has a low profile and a strong downward force.
- Slotted version has a clamping step to lift the workpiece off the machine table through drilling.
- Used in power transmission systems, machinery, construction and rigging.

Specifications

Material: Hardened Steel

Modular Pitbull Clamps have a low profile and a strong downward force. It is intended for use in fixtures or cubes.

The slotted version has a clamping step to lift the workpiece off the machine table through milling or drilling. While the small version is appropriate for clamping workpieces in sequence, the back surface of the clamp is used to find the next workpiece.

The clamps back is square to the bottom for proper part placement. It is strong and ready to use after being installed in the application. It is used in power transmission systems, machinery, construction and rigging.

Modular Pitbull Clamps

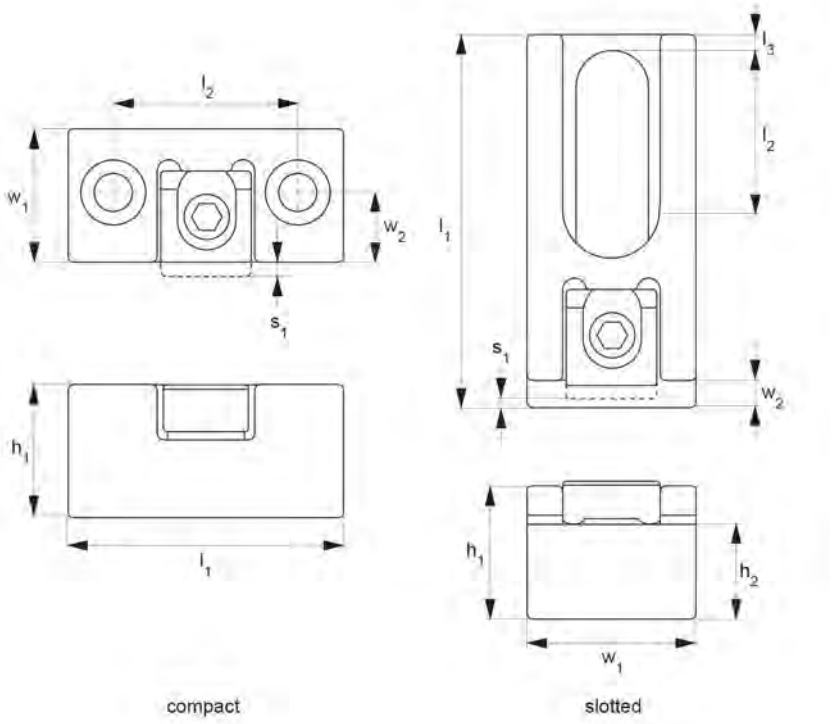



Part Number	Body Type	Clamp Type	h1	l1	w1
20267353	Compact	Knife	25.1	57.1	31.2
20267360	Compact	Blunt	25.1	57.1	31.2
20267377	Compact	Knife	31.5	68.6	37.6
20267384	Compact	Blunt	31.5	68.6	37.6
20267391	Slotted	Knife	25.1	103.6	31.7
20267407	Slotted	Blunt	25.1	103.6	31.7
20267414	Slotted	Knife	40.9	107.0	38.1
20267421	Slotted	Blunt	40.9	107.0	38.1
20266202	Low Profile	Versagrip	35.0	76.2	25.4
20266219	Low Profile	Talongrip	35.0	76.2	25.4
20266226	Low Profile	Pitbull - Knife	35.0	76.2	25.4
20266233	Low Profile	Pitbull - Blunt	35.0	76.2	25.4
20266240	Low Profile	Pitbull - Mach	35.0	76.2	25.4

Pitbull Clamps

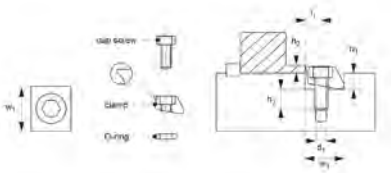

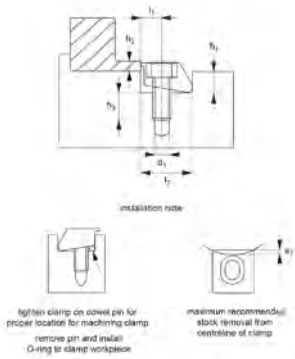



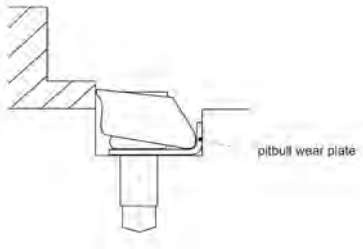

Features

- It has a low grip height and positive downforce.
- It can withstand temperatures from -30 C to +80C.
- Suitable for metalworking, woodworking, or fabrication applications.

Specifications

Material: Steel, Brass

These Pitbull Clamps are used to hold workpieces securely in place. It uses a clamping technology that blends the clamp's gripping force with the adaptability and flexibility of a vice.

It has a low grip height and positive downforce. The blunt tool steel edge is less likely to leave marks on workpieces, whilst the knife-edge version cuts into the material for more aggressive machining.

It enables quick and simple clamping without extra tools or excessive force. It can withstand temperatures ranging from -30 C to +80C. Suitable for metalworking, woodworking, or fabrication applications.

Pitbull Clamps

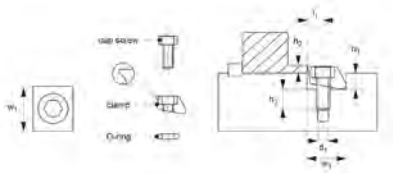

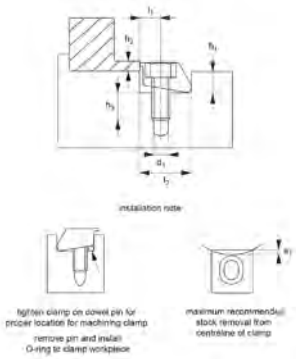



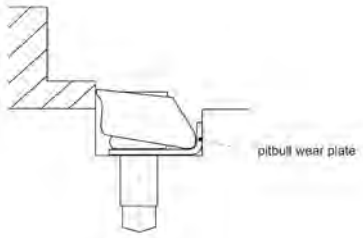

Part Number	Clamp Type	d1	h1	h2	h3	l1	s1
20266714	Machinable	M10	11.43	6.4	18.0	10.16	1.5
20266721	Machinable	M12	16.26	9.5	19.6	15.24	4.5
20266585	Blunt Edge	M2.5	3.6	1.9	6.6	3.8	0.2
20266592	Blunt Edge	M2.5	3.6	1.9	6.6	3.8	0.2
20266608	Blunt Edge	M2.5	3.6	1.9	5.6	3.8	0.2
20266615	Knife Edge	M4	4.8	2.6	9.9	5.1	0.4
20266622	Blunt Edge	M4	4.8	2.6	9.9	5.1	0.4
20266639	Knife Edge	M4	4.8	2.6	8.6	5.1	0.4
20266646	Blunt Edge	M6	7.1	3.8	14.5	7.6	0.6
20266653	Knife Edge	M6	7.1	3.8	14.5	7.6	0.6
20266660	Blunt Edge	M6	7.1	3.8	11.2	7.6	0.6
20266677	Knife Edge	M10	11.4	6.4	18.0	10.2	1.3
20266684	Blunt Edge	M10	11.4	6.4	18.0	10.2	1.3
20266691	Knife Edge	M12	16.3	9.5	19.6	15.2	1.9
20266707	Blunt Edge	M12	16.3	9.5	19.6	15.2	1.9

Talongrip Clamps

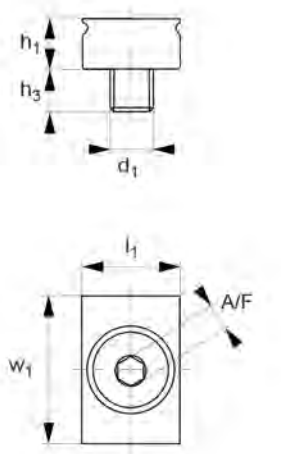

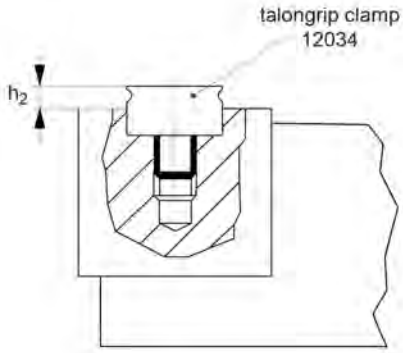

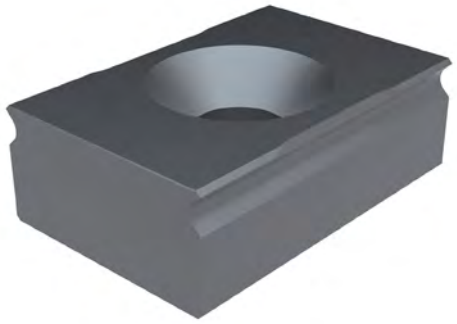

Features

- Designed to be used in conjunction with Pitbull or Dynaforce clamps.
- Positive clamping force for fast cutting rates.
- It is ideal for construction, manufacturing, maintenance, and repair applications.

Specifications

Material: Hardened Steel

These Talongrip Clamps are designed to be used in conjunction with Pitbull or Dynaforce clamps. It is a simple bolt-on device that lets you execute aggressive machining while clamping on as little as 1.5mm.

It has a positive clamping force for fast cutting rates. The talons' shape creates a modest pull-down action, holding components in place.

It is ideal for small lot quantities, complex applications, or prototyping where creating a fixture would be inconvenient, such as in construction, manufacturing, maintenance, and repair.

Talongrip Clamps

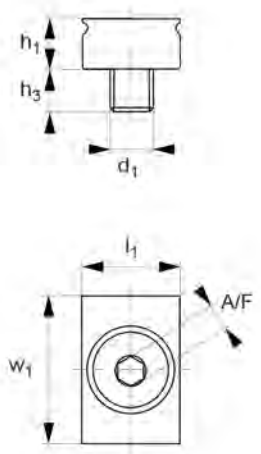

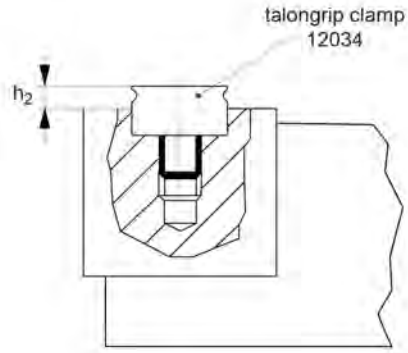

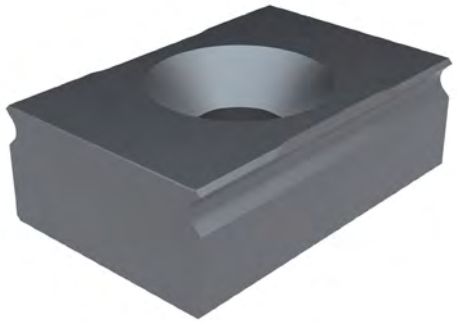

Part Number	d1	Gripping height h2	h1	h3	l1	w1	A/F
20266141	M5	1.5 - 1.9	6.4	6.0	12.7	19.1	3.0
20267438	M5	1.5 - 3.0	7.9	8.1	19.1	19.1	3.0
20267445	M5	1.5 - 3.0	7.9	8.1	25.4	19.1	3.0
20267452	M8	1.5 - 5.6	12.7	6.0	25.4	25.4	5.0

Talongrip Serrated Grips

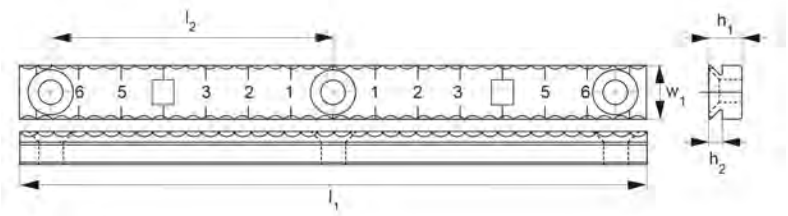



Features

- Have a distinctive serrated design that increases gripping force while reducing slippage.
- It is suitable for prolonged usage.
- Used in machinery, metalworking, and manufacturing.

Specifications

Material: Steel

Talongrip Serrated Grips are made to give superior grip and stability. These clamps have a distinctive serrated design that increases gripping force while reducing slippage.

The increased gripping makes them suitable for prolonged usage. For applications in which a precise grasp point is not required or where full-length penetration is needed. Used in machinery, metalworking, and manufacturing.

Talongrip Serrated Grips

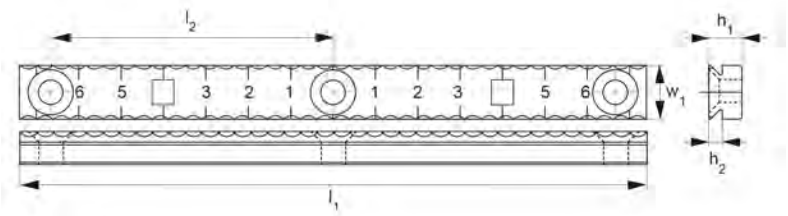



Part Number	h1	l1	l2	w1	Fits Wixroyd jaw set	Gripping height h2
20266349	9.3	50.0	38.1	19.1	20267469	1.3-4.1
20266356	7.8	98.8	41.3	12.7	20267469	1.3-3.2
20266363	7.8	148.1	66.7	12.7	20267469	1.3-3.2

Cam Clamps

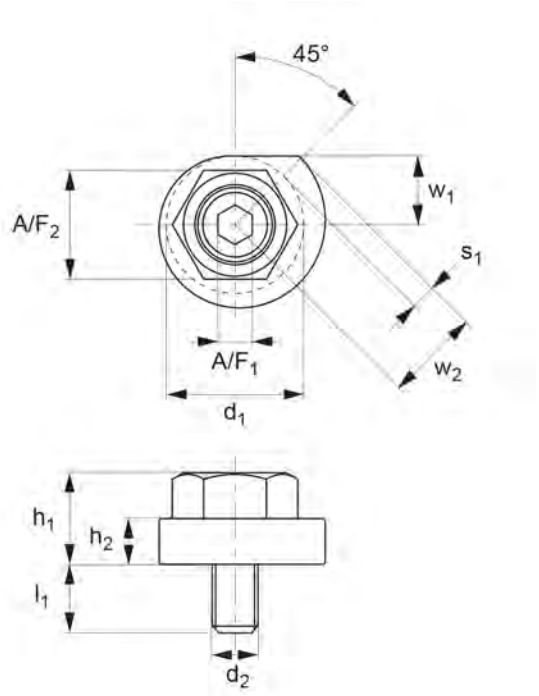



Features

- It has a cam mechanism that enables quick tightening or relaxing of the grip.
- Delivers a uniform and even distribution of clamping force.
- Used in metallurgy, electronics, and construction.

Specifications

Material: Steel

Cam Clamps are simple and robust clamps that firmly hold and grasp workpieces. It has a cam mechanism that enables quick tightening or relaxing of the grip. Simply rotating the cam adjusts the clamping force to meet the applications needs.

It is versatile and adjustable, accommodating a wide range of sizes and shapes, and delivers a uniform and even distribution of clamping force to provide a secure grasp without hurting the application.

They are easy to install with a spanner. Insert the flanged collar and screw it into the cam body. Tighten the locking screw to secure the cam. Used in metallurgy, electronics, and construction.

Cam Clamps

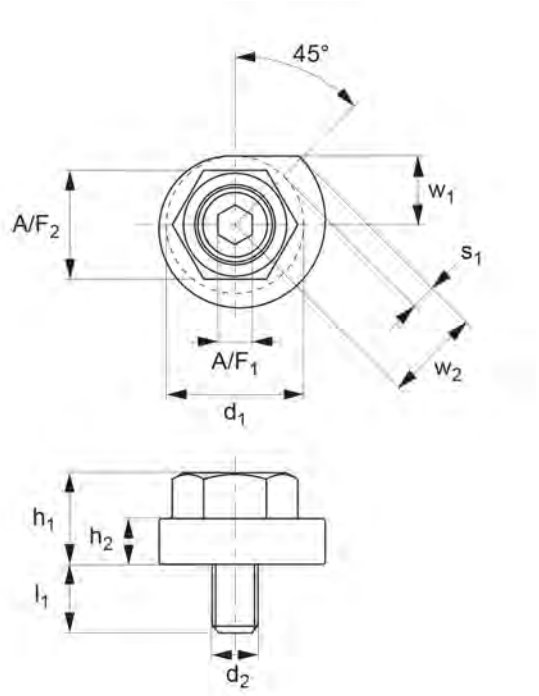



Part Number	d1	d2	h1	h2	l1	w1	w2
20265908	24.0	M8x1.25	16.0	8.0	12.0	12.0	16.4
20265915	30.0	M10x1.50	20.0	10.0	15.0	15.0	20.5
20265922	34.0	M12x1.75	24.0	12.0	18.0	17.0	23.2

Clamp Replacement Screws

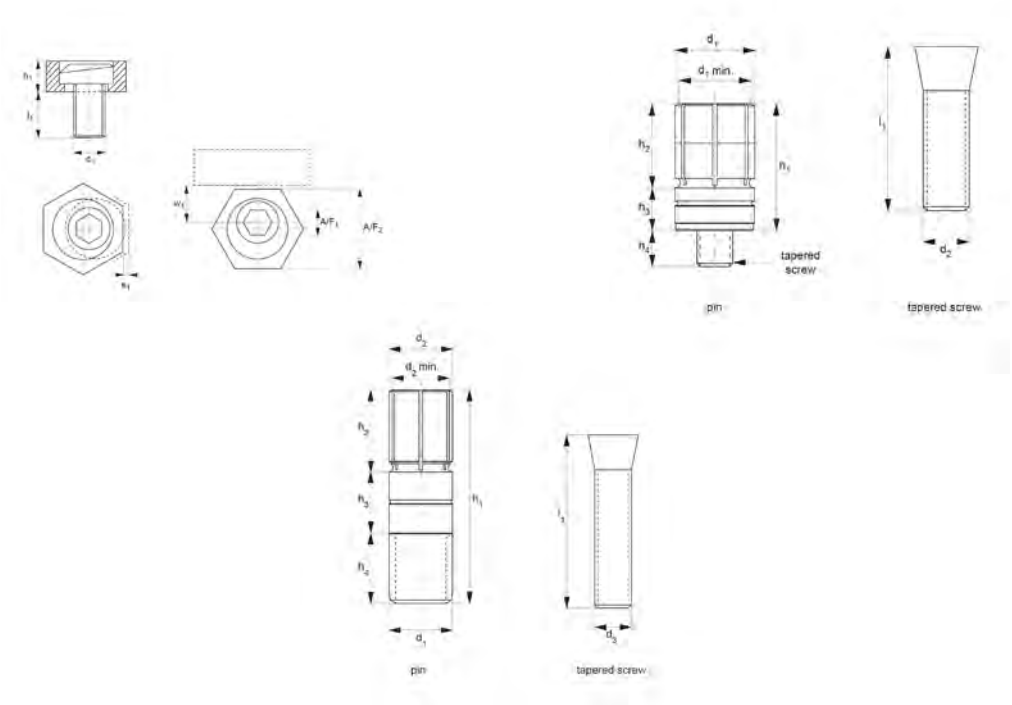



Features

- It transmits clamping force evenly while maintaining alignment.
- It provides a smooth transition when replacing old or broken clamps.
- Used in machining, welding, and assembling operations.

Specifications

Material: Steel, Stainless Steel, Hardened Steel

These Replacement Screws are used to substitute Eccentric Fixture Clamps. Their design allows them to transmit clamping force evenly while maintaining alignment, ensuring a seamless adjustment.

Their compatibility means they provide a smooth transition when replacing old or broken clamps, reducing downtime and assuring continuous productivity. It clamps quickly and forcefully and is designed for long-term use. Used in machining, welding, and assembling operations.

Clamp Replacement Screws

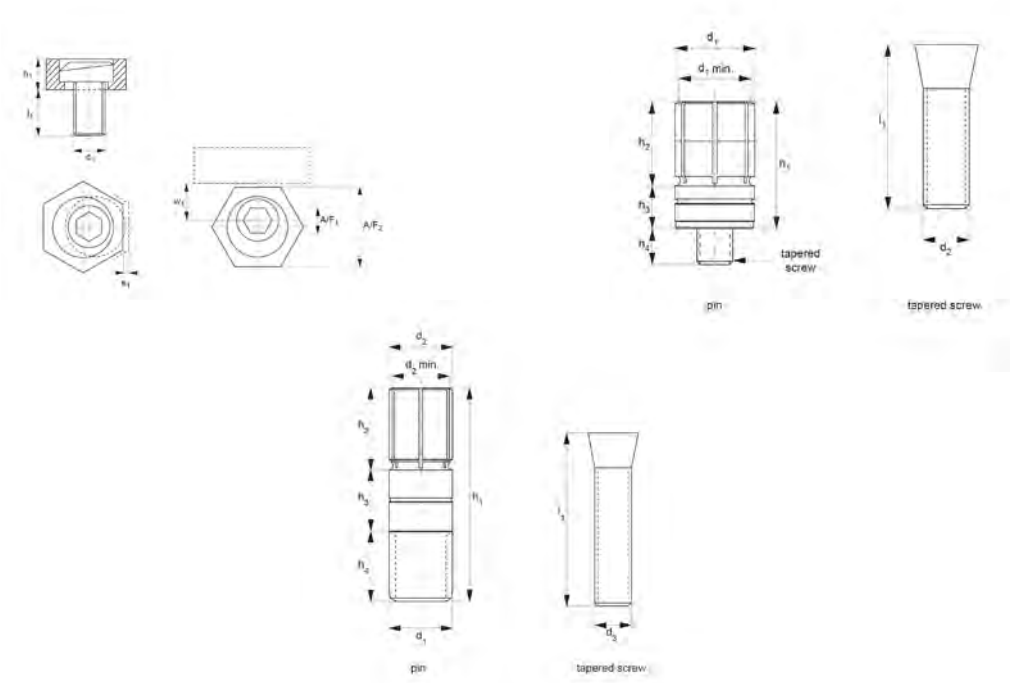



Part Number	Type	Material
20266974	Replacement Screw	Hardened Steel
20266981	Replacement Screw	Hardened Steel
20266998	Replacement Screw	Hardened Steel
20267001	Replacement Screw	Hardened Steel
20267018	Replacement Screw	Hardened Steel
20267025	Replacement Screw	Hardened Steel
20266400	Stainless Screw	Stainless Steel
20265380	Stainless Screw	Stainless Steel
20267032	Stainless Screw	Stainless Steel
20265793	Tapered Screws	Steel
20265809	Tapered Screws	Steel
20265717	Tapered Screws	Steel
20265762	Tapered Screws	Steel
20265670	Installation Tool	Steel
20265687	Installation Tool	Steel
20265694	Installation Tool	Steel
20265700	Installation Tool	Steel
20265816	Tapered Screws	Steel
20265823	Tapered Screws	Steel

Clamping Plates

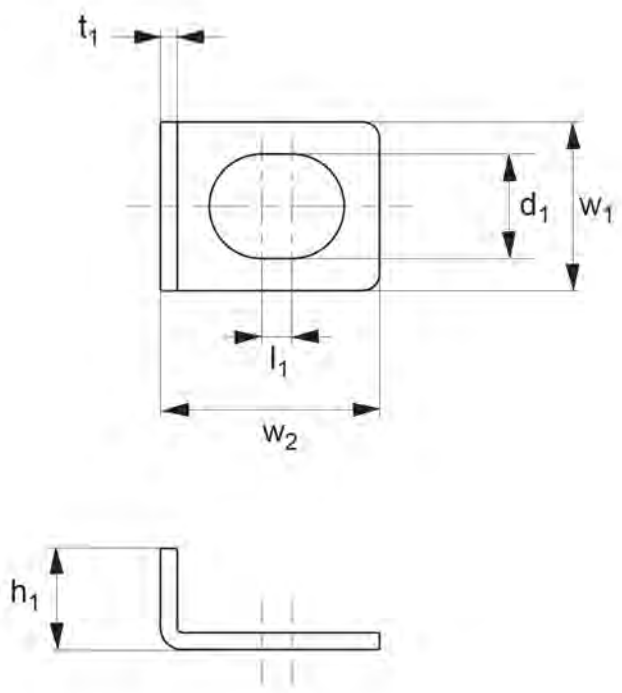



Features

- It has a flat, hard surface with a bent side and a drilled mounting hole in the middle that aligns with the mounting point of the clamp.
- It gives a dependable and repeatable clamping solution, delivering consistent and precise results.
- Used in machining, woodworking, and assembly processes.

Specifications

Material: 304 Stainless Steel

These Clamping Plates for spiral cam clamps are designed with precision-machined surfaces and a durable structure to provide a tight grasp on the workpiece when clamping, avoiding workpiece deformation.

It has a flat, hard surface with a bent side and a perfectly drilled mounting hole in the middle that aligns with the mounting point of the clamp. The Clamping Plate and spiral cam clamps work together to give a dependable and repeatable clamping solution, delivering consistent and precise results in various applications.

Its design makes installation quick and straightforward and is utilised in machining, woodworking, and assembly processes.

Clamping Plates

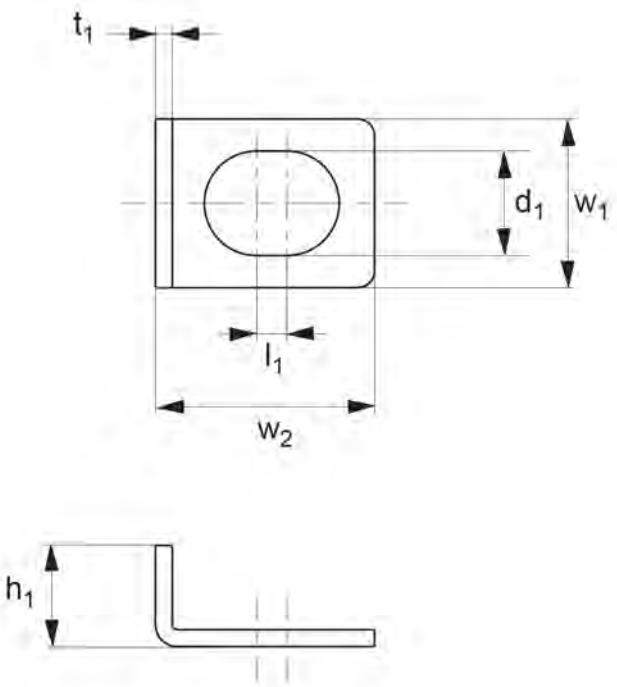



Part Number	d1	For spiral clamp size d2	h1	l1	w1	w2
20265960	6.2	10.0	6.0	1.8	10.0	13.0
20265977	8.2	12.0	7.0	2.2	12.0	15.5
20265984	10.2	14.0	8.0	2.6	14.0	18.0
20265991	12.2	16.0	9.0	2.9	16.0	20.0

Compact Wedge Clamps

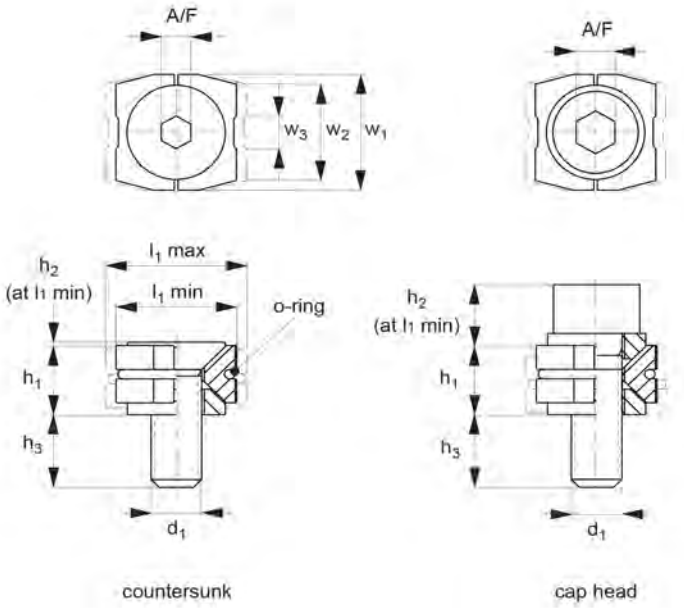



Features

- It offers a strong hold, ensuring workpiece remains securely positioned while cutting, drilling, or assembling.
- It provides both downward and side gripping force.
- Used in machining, electronics assembly, and medical manufacturing.

Specifications

Material: Steel

These Compact Wedge Clamps can withstand huge loads and strong pressure without affecting performance. Due to their compact size, these clamps are suitable for working in limited places or with smaller workpieces.

The wedge design provides a strong and dependable hold, ensuring your workpiece remains securely positioned while cutting, drilling, or assembling. It also results in forceful clamping and holding of two workpieces with equal clamping force.

It provides both downward and side gripping force. They are installed with a hex wrench. Used in various applications, including precision machining, electronics assembly, and medical manufacturing.

Compact Wedge Clamps

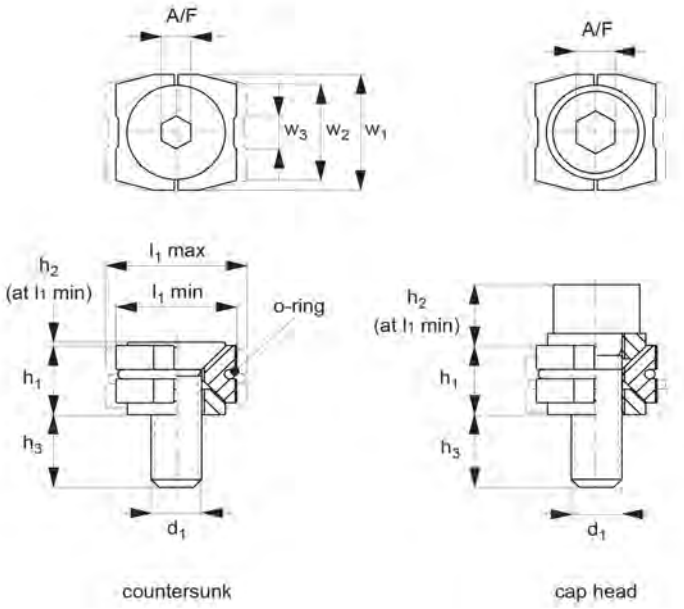



Part Number	Clamp Type	d1	l1 min	l1 max	h1 min	h1 max	h2
20265830	Countersunk	M5x15	12.0	14.0	6.2	7.2	0.3
20265847	Countersunk	M6x16	15.0	17.0	7.5	8.5	0.2
20265854	Countersunk	M8x20	18.5	21.5	9.9	11.4	0.4
20265861	Cap Head	M5x15	12.0	14.0	6.2	7.2	6.2
20265878	Cap Head	M6x16	15.0	17.0	7.5	8.5	7.3
20265885	Cap Head	M8x20	18.5	21.5	9.9	11.4	9.8

Dyna-Force Clamps

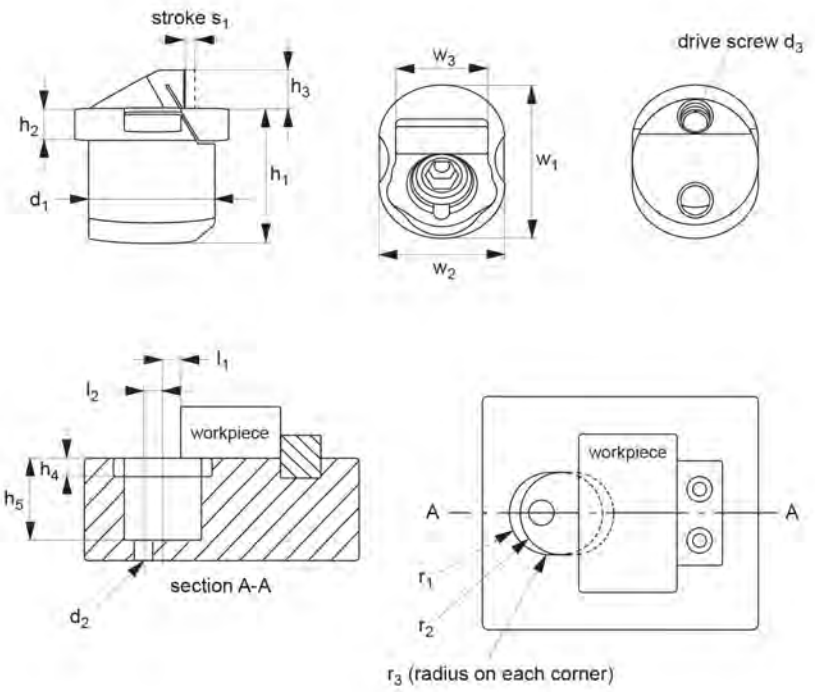



Features

- It has a low profile, compact shape, and smooth or serrated faces.
- Clamp-bearing surface can be level with the clamping plate or elevated to allow for thorough drilling.
- Used in various industries, including manufacturing, metalworking, and automotive assembly.

Specifications

Material: Stainless Steel

These Dyna-Force Clamps are designed to secure, clamp, and hold objects in place. It gives a strong and dependable grip while still being simple to use and precise. The high clamping force enhances productivity and precision in industrial processes.

They have a low profile, compact shape, and smooth or serrated faces. The clamp moves at an angle to provide a positive downward clamping force - roughly 25% of the clamping force. To achieve exact alignment, the clamp-bearing surface is wire cut.

The clamp-bearing surface can be level with the clamping plate or elevated to allow for thorough drilling. It can be used in various industries, including manufacturing, metalworking, and automotive assembly.

Dyna-Force Clamps

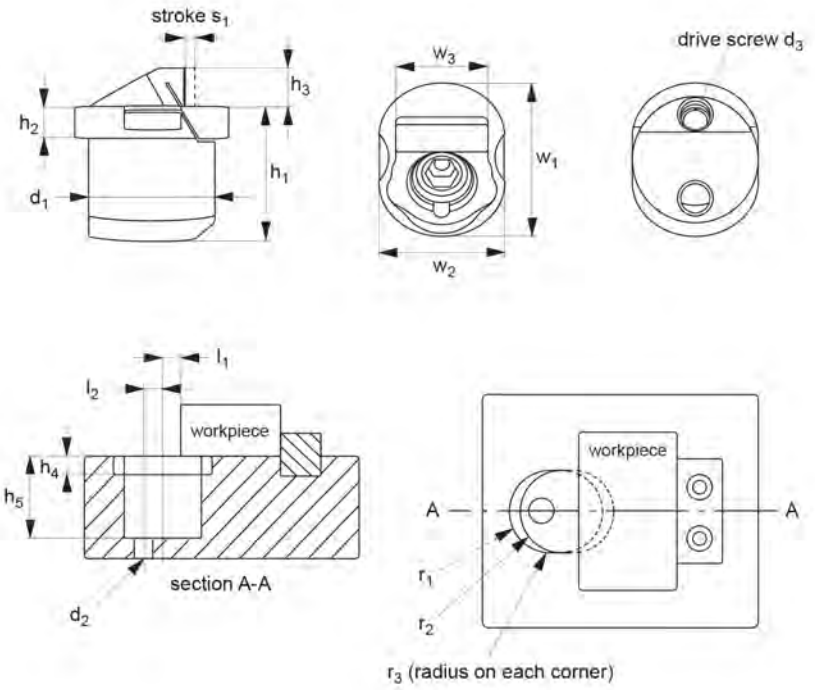



Part Number	Jaw type	d1	d2	Drive screw d3	h1	h2	h3 min
20266486	Smooth	20.0	M5	M6x12	19.0	4.5	3.3
20338190	Serrated	20.0	M5	M6x12	19.0	4.5	3.3
20266509	Smooth	25.0	M6	M8x16	24.0	5.0	4.5
20266516	Serrated	25.0	M6	M8x16	24.0	5.0	4.5
20266523	Smooth	30.0	M8	M10x18	29.0	7.0	4.5
20266530	Serrated	30.0	M8	M10x18	29.0	7.0	4.5

Eccentric Fixture Clamps

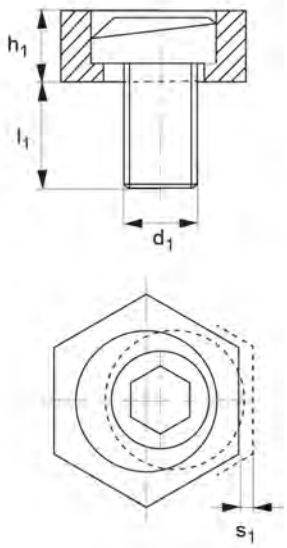

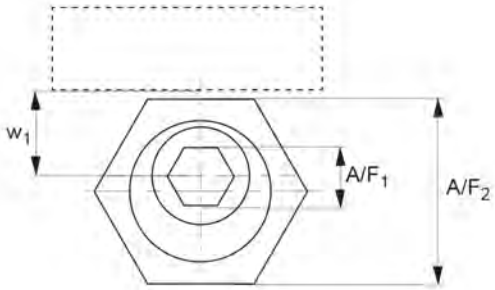



Features

- Uses an eccentric shaft to enable fine torque control and changeable grip.
- It distributes clamping force evenly while preserving precise alignment.
- Used in precision machining, assembly, and hold-down applications.

Specifications

Material: Hardened Steel

Eccentric fixture clamps use an eccentric shaft to enable fine torque control and changeable grip while maintaining exact alignment and placement. The eccentric design distributes clamping force evenly while preserving precise alignment.

It offers rapid and forceful clamping and is built for durability and longevity. Used in precision machining, assembly, and hold-down applications.

Eccentric Fixture Clamps

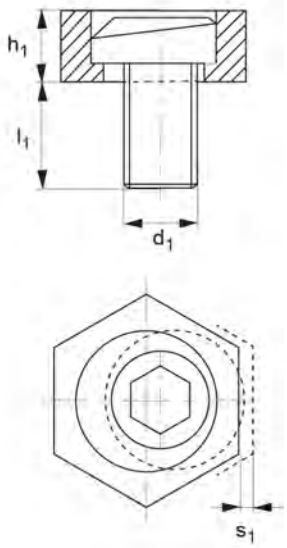

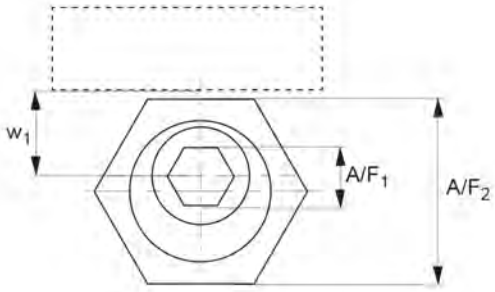



Part Number	d1	h1	l1	Clamping force max. kN	s1	w1	A/F1
20266899	M4x0.7	2.80	9.6	0.9	0.76	3.8	3.0
20266905	M6x1	4.75	11.2	3.5	1.01	7.8	4.0
20266912	M8x1.25	4.55	15.0	3.5	1.01	10.2	5.0
20266929	M10x1.5	6.35	19.0	8.8	1.27	10.2	7.0
20266936	M12x1.75	9.52	22.8	17.7	2.03	12.7	8.0
20266943	M16x2	12.70	28.5	26.6	2.54	15.0	12.0
20266394	M4x0.7	2.80	9.6	0.9	0.76	3.80	3.0
20266950	M6x1	4.75	11.2	3.5	1.01	7.80	4.0
20266967	M8x1.25	6.35	15.0	3.5	1.01	10.20	5.0

Eccentric Knife Edge Clamps

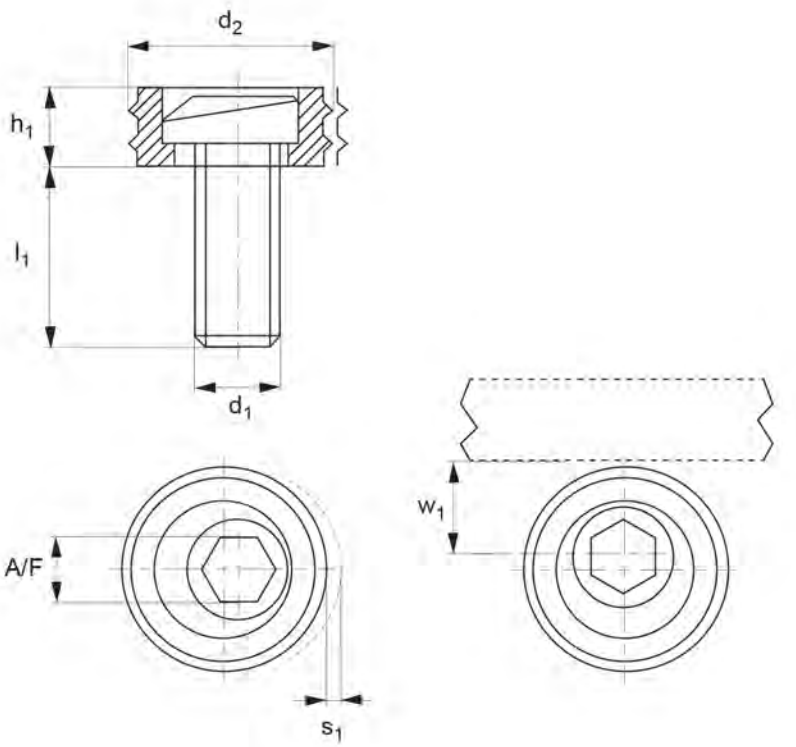



Features

- It offers a firm and accurate grip while requiring little surface contact.
- Useful for securely holding fragile materials without causing harm.
- Used in industries such as construction, assembly and welding applications.

Specifications

Material: Hardened Steel

Eccentric Knife Edge Clamps offer a firm and accurate grip while requiring little surface contact. This clamp has knurls that enable the clamp to grab the workpiece with little touch, enabling accurate and secure clamping of workpieces with uneven surfaces.

It is especially useful for securely holding delicate or fragile materials without causing harm or distortion. The workpiece should be to the right of the clamp. Used in industries such as construction, assembly and welding applications.

Eccentric Knife Edge Clamps

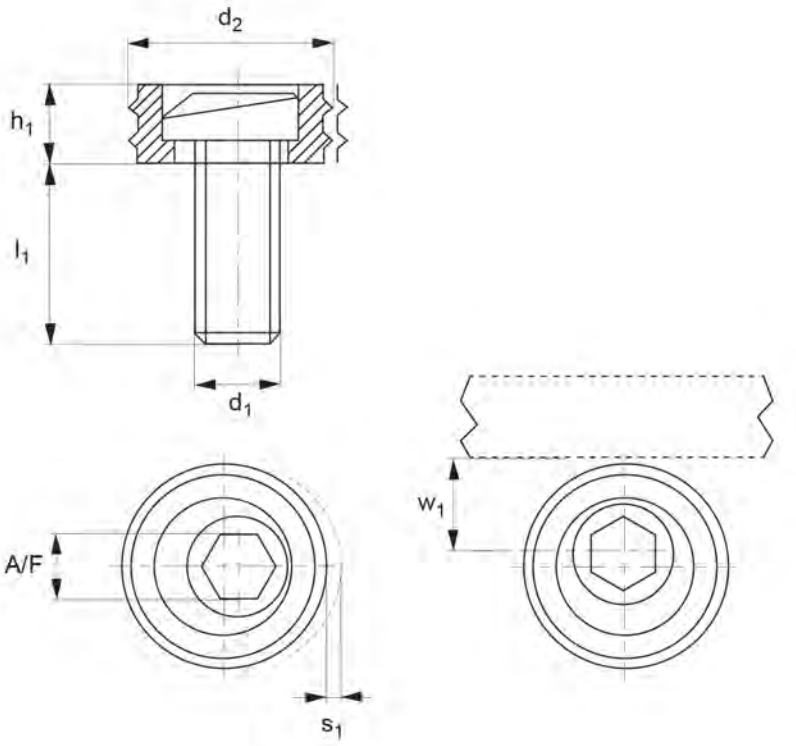



Part Number	d1	d2	h1	l1	Clamping force max. kN	s1	w1
20267049	M10x1.5	20.6	6.35	19.0	8.8	1.22	10.2
20267056	M12x1.75	25.4	9.52	22.8	17.7	2.03	12.7
20267063	M10x1.5	20.6	6.35	19.0	8.8	1.22	10.2

Eccentric Pull Down Clamps

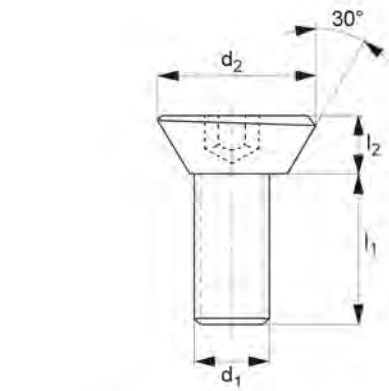

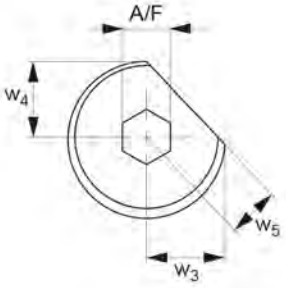

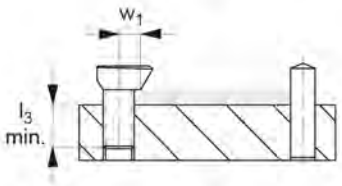

w_1 - max distance from component when clamping above

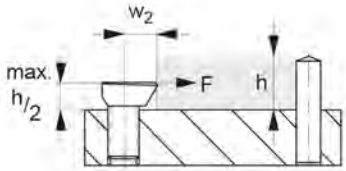

w_2 - max distance from component when clamping below



Features

- Perfect for pull-down and side clamping forces in limited space.
- Ideal for clamping in automotive, construction, and machining applications.
- Combines a tapered cone with an offset eccentric thread.

Specifications

Material: Hardened Steel

Eccentric Pull-down Clamps with small, sturdy, and stable construction are perfect for supplying pull-down and side clamping forces in situations with limited space.

It combines a tapered cone with an offset eccentric thread to offer clamping above or below the component's surface. It is unaffected by swarf ingress and has a strong tensile and side thrust clamping force.

It features a low profile, a small footprint, and is simple to use. Ideal for clamping multi components in automotive, construction, and machining.

Eccentric Pull Down Clamps

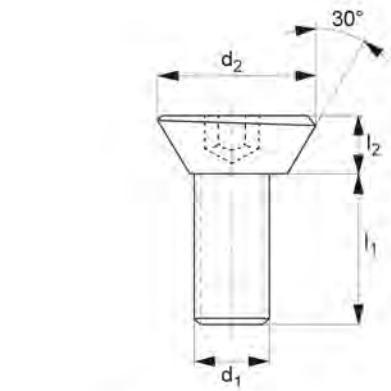

w_1 - max distance from component when clamping above

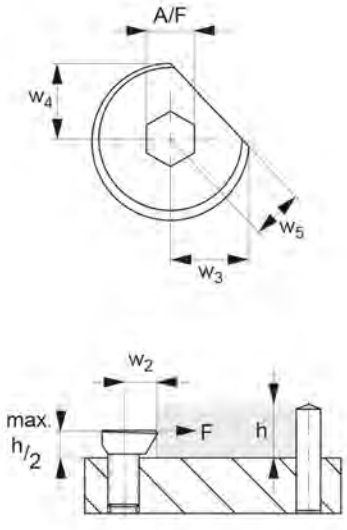

w_2 - max distance from component when clamping below



Part Number	d1	d2	l1	l2	l3 min	w1	w2 ±0.2
20265731	M3	6.7	6.0	2.0	3.0	3.0	3.2
20265540	M4	8.7	8.0	3.0	4.0	3.5	4.2
20265649	M5	10.9	10.0	4.0	5.0	4.2	5.2
20265557	M6	13.5	12.0	5.0	6.0	5.4	6.4
20265564	M8	16.9	16.0	6.0	8.0	6.6	8.0
20265571	M10	20.9	20.0	7.0	10.0	8.3	9.8
20265588	M12	26.1	24.0	9.0	12.0	10.1	12.0

Expanding Loc-Down Bolts

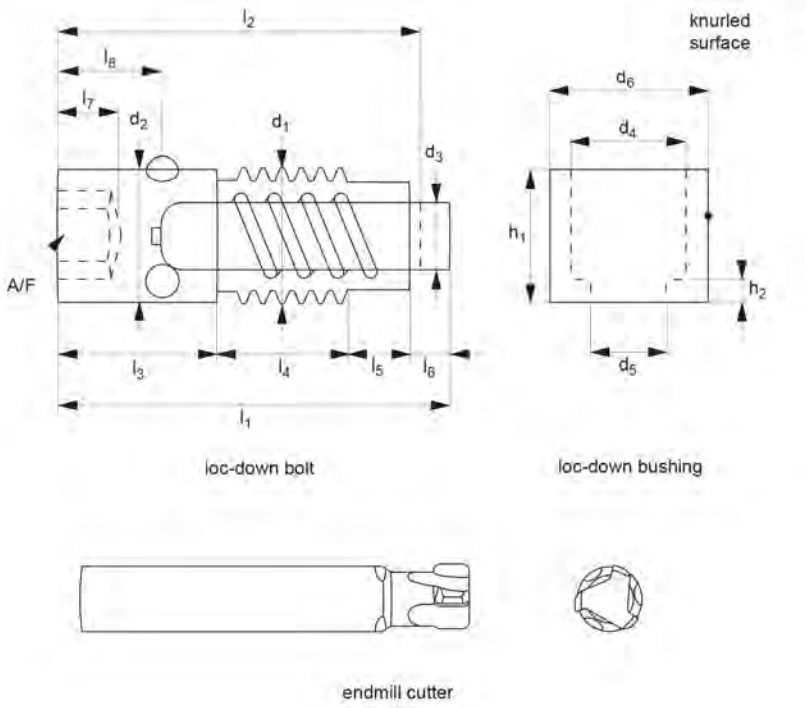



Features

- It has an expanding mechanism that allows it to be inserted into pre-drilled holes for quick clamping.
- Used with location pins and drill bushes in plates for quick and precise placement.
- Used in manufacturing, construction, woodworking, and metalworking sectors.

Specifications

Material: Stainless Steel, Alloy Steel

These Expanding loc-down bolts, also called expansion bolts, are designed to offer fast and secure component clamping. It has an expanding mechanism that allows it to be readily inserted into pre-drilled holes for quick and straightforward clamping, minimising setup time and enhancing productivity.

Once installed, the bolts may be extended, putting pressure on the surrounding components and securely fastening them in place. Used with location pins and drill bushes in plates for quick and precise placement.

It eliminates the requirement for standard bolts while eliminating tooling interference from traditional clamping techniques. It is suited for high-speed machining of components and is utilised in manufacturing, construction, woodworking, and metalworking sectors.

Expanding Loc-Down Bolts

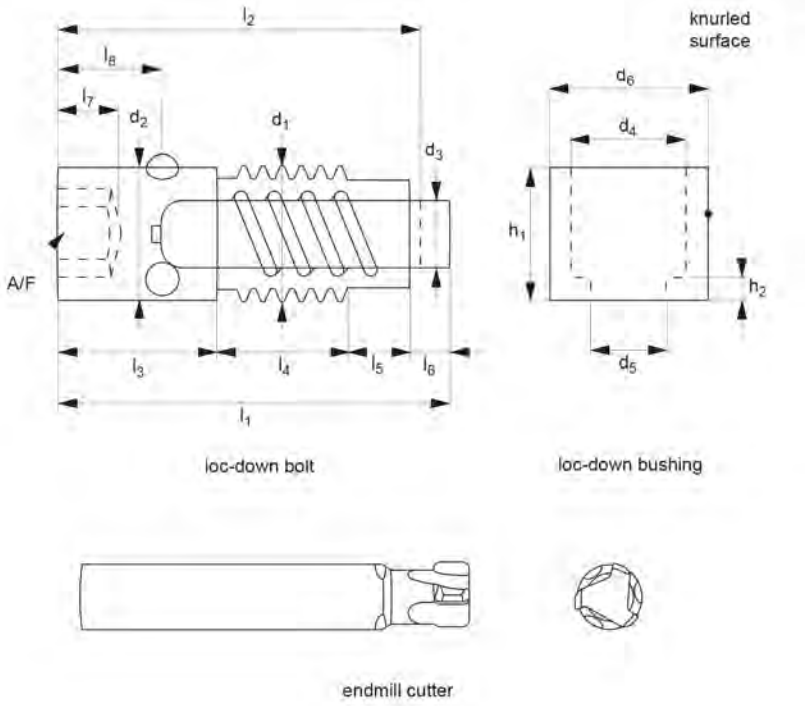



Part Number	Type	Thread Size	Material
20266103	Loc-down bolt	M10	Stainless Steel
20267643	Loc-down bolt	M12	Stainless Steel
20266134	Loc-down bolt	M16	Stainless Steel
20266127	Loc-down bushing	M10	Alloy Steel
20266110	Loc-down bushing	M16	Alloy Steel
20266370	Endmill cutter	M10	Stainless Steel
20266387	Endmill cutter	M12;M16	Stainless Steel
20265724	Bushing Installation Tool	M10;M16	Stainless Steel

ID Xpansion Clamps - Machinable

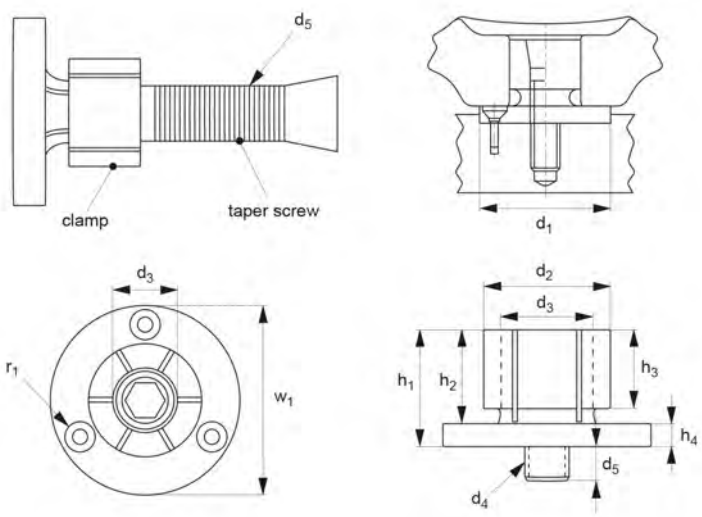



Features

- Designed for high density machining on vertical or horizontal mills.
- It has a low profile ideal for secondary operations on lathe workpieces.
- Used for machinability, medical devices, electronic manufacturing, and automotive applications.

Specifications

Material: Mild Steel
Colour:
Material Flammability Standard:

These ID Xpansion Clamps are designed for holding parts on an inside diameter, for high density machining on vertical or horizontal mills. Diameter can range from 4,1mm to a maximum of 250mm.This product can also be used as an expanding mandrel on a lathe.

Its low profile suits it for secondary operations on lathe workpieces. It can accommodate more pieces per workpiece hub or fixture plate and is simple to manufacture to size on a lathe or milling machine.

A hex key or hydraulic pull cylinders are used to install and tighten it. It has a mild steel body and is used for machinability, medical devices, electronic manufacturing, and automotive applications.

ID Xpansion Clamps - Machinable

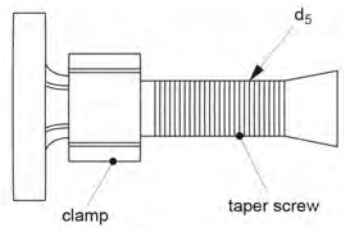

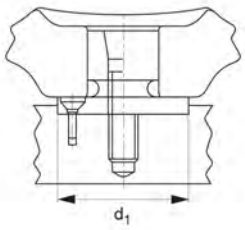

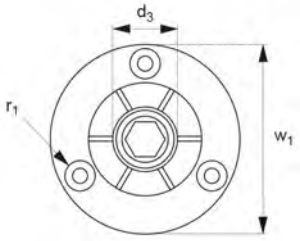

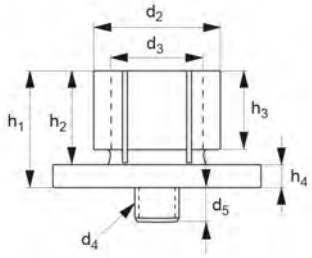



Part Number	h1	h2	h3	d1 +0.000|-0.050	d3 min	d4	d5
20267605	10.7	7.6	6.1	20.0	4.1	M2	4.1
20266813	21.8	16.0	15.0	29.7	7.1	M4	7.2
20266820	24.9	19.0	15.0	31.5	12.2	M6	11.2
20266837	24.9	19.0	15.0	37.5	13.5	M8	13.2
20266844	28.6	22.2	17.5	50.0	18.0	M10	16.3
20266851	31.8	25.4	20.6	56.0	23.0	M12	20.3
20266868	39.6	31.8	27.0	69.5	29.3	M16	21.4
20266875	39.6	31.8	27.0	75.5	29.3	M16	21.4
20266882	45.5	37.6	32.3	107.5	29.3	M16	19.3
20267612	45.5	37.6	32.3	132.9	29.3	M16	19.3
20267629	45.5	37.6	32.3	132.9	29.3	M16	19.3
20267636	45.5	37.6	32.3	152.4	29.3	M16	19.3

XYZ Xpansion Pins - Press-Fit

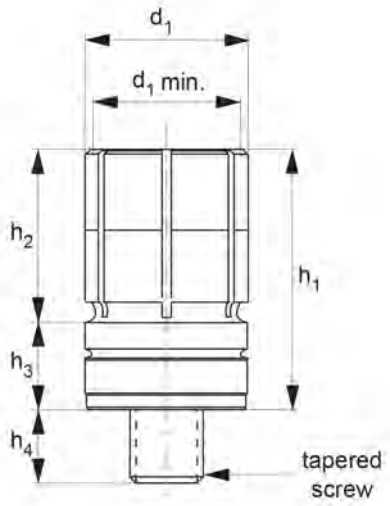

pin

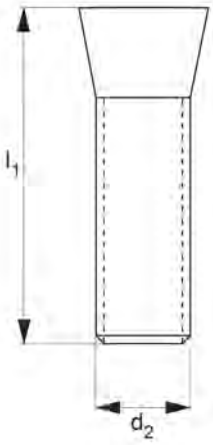

tapered screw



Features

- The pin's top has been slightly tapered to optimise line contact in the mounting bore.
- The press-fit feature keeps the pins in place even under vibration or dynamic stresses.
- Used in electronic manufacturing, industrial machinery, and medical devices.

Specifications

Material: Steel, Stainless Steel

These XYZ Xpansion Pins, feature a unique design that allows for exact positioning and repeatability while providing strong holding pressures to fasten pieces on an interior diameter.

The pins top has been slightly tapered to optimise line contact in the mounting bore while providing appropriate clearance during workpiece loading and unloading. Furthermore, the press-fit feature keeps the pins in place even when subjected to vibration or dynamic stresses.

It is easy to install by pressing them into a precisely drilled hole with a threaded hole in the middle to take a tapered screw; once in place, it expands to form a tight and secure fit. It offers a low-cost solution for tombstones, water jetting operations, grid and fixture plates, and other applications in electronic manufacturing, industrial machinery, and medical devices.

XYZ Xpansion Pins - Press-Fit

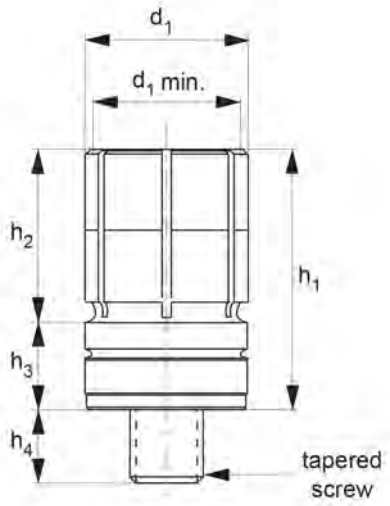

pin

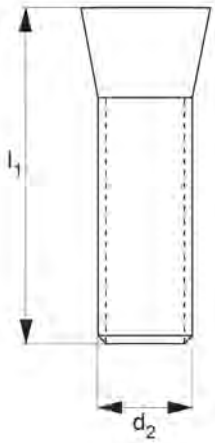

tapered screw



Part Number	l1	d1 +0.00|-0.025	d1 min	h1	h2	h3	Material
20265625	16.0	6.0	5.5	13.0	7.0	5.8	Stainless Steel
20265618	22.0	10.0	7.5	19.0	12.7	6.4	Stainless Steel
20265601	22.0	12.0	10.5	19.0	12.7	6.4	Stainless Steel
20265595	22.0	16.0	12.0	19.0	12.7	6.4	Stainless Steel
20265786	16.0	6.0	5.5	13.0	7.0	5.8	Steel
20266431	22.0	10.0	7.5	19.0	2.7	6.4	Steel
20266448	22.0	12.0	10.5	19.0	12.7	6.4	Steel
20266455	22.0	16.0	12.0	19.0	12.7	6.4	Steel

XYZ Xpansion Pins - Threaded

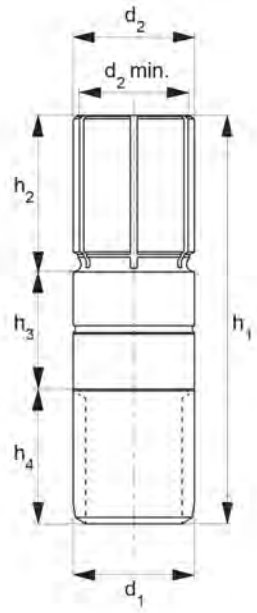

pin

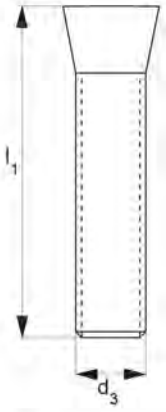

tapered screw



Features

- It enables precise placement and repeatability while delivering high holding pressures.
- The pin's top has been slightly tapered to improve line contact in the mounting bore.
- Used in electronic manufacturing, industrial machinery, and medical device applications.

Specifications

Material: Stainless Steel

These XYZ Xpansion Pins, have a unique design that enables precise placement and repeatability while delivering high holding pressures to secure items with an inner diameter.

The pins top has been slightly tapered to improve line contact in the mounting bore while giving adequate space during workpiece loading and unloading. Furthermore, the threaded design allows them readily inserted into pre-drilled holes. It enables one to manage the extension of the pins, resulting in a secure solution.

It is placed through a drilled and reamed hole for precision positioning or set in a reinforced drill bush for further fixture strength and wear resistance; once installed, it expands to create a tight and secure fit. It provides a low-cost solution for tombstones, water jetting operations, grid and fixture plates, and other electronic manufacturing, industrial machinery, and medical device applications.

XYZ Xpansion Pins - Threaded

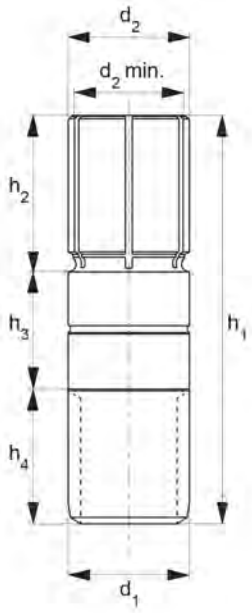

pin

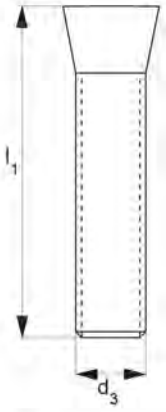

tapered screw



Part Number	d1	d2 +0.00|-0.025	d2 min	h1	h2	h3
20265656	M12x1.75	12.0	10.5	40.0	15.0	12.0
20265663	M16x2.00	16.0	12.0	45..0	16.0	16.0

Uniforce Clamps

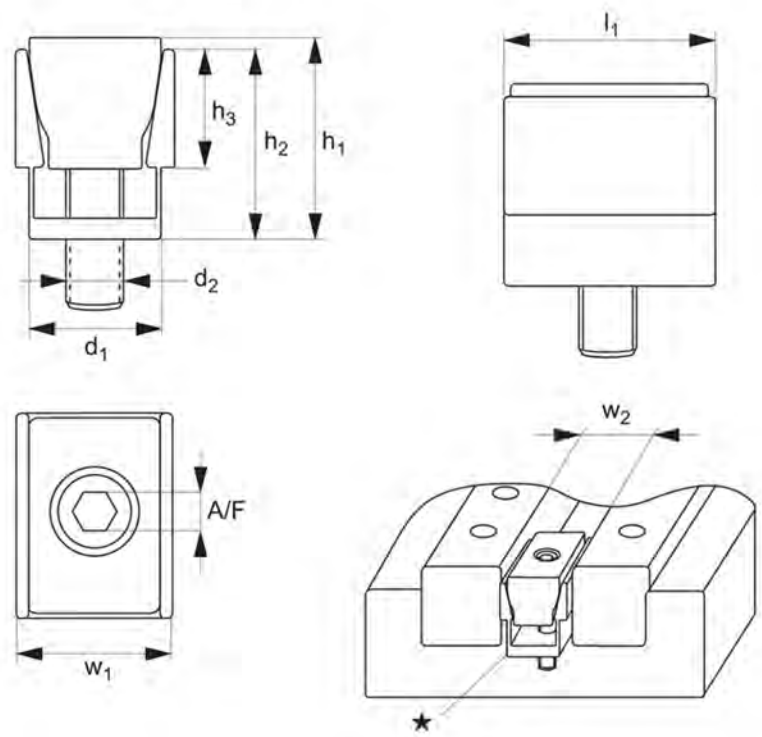



Features

- It withstands big loads and high pressure without sacrificing performance.
- It is small and easy to include in fixtures due to the use of tapped holes and slots.
- Used in industries such as construction metalworking or precision machining.

Specifications

Material: Aluminium

These Uniforce Clamps can clamp two pieces with an equivalent clamping action with a single clamp. It is exceptionally strong, durable, and versatile. They can withstand big loads and high pressure without sacrificing performance.

It is very effective for clamping many workpieces. They are small and easy to include in fixtures due to the use of tapped holes and slots. It can be used to clamp circular bars as long as the jaw's centre line is above the workpiece's centre line. Used in industries such as construction metalworking or precision machining.

Uniforce Clamps

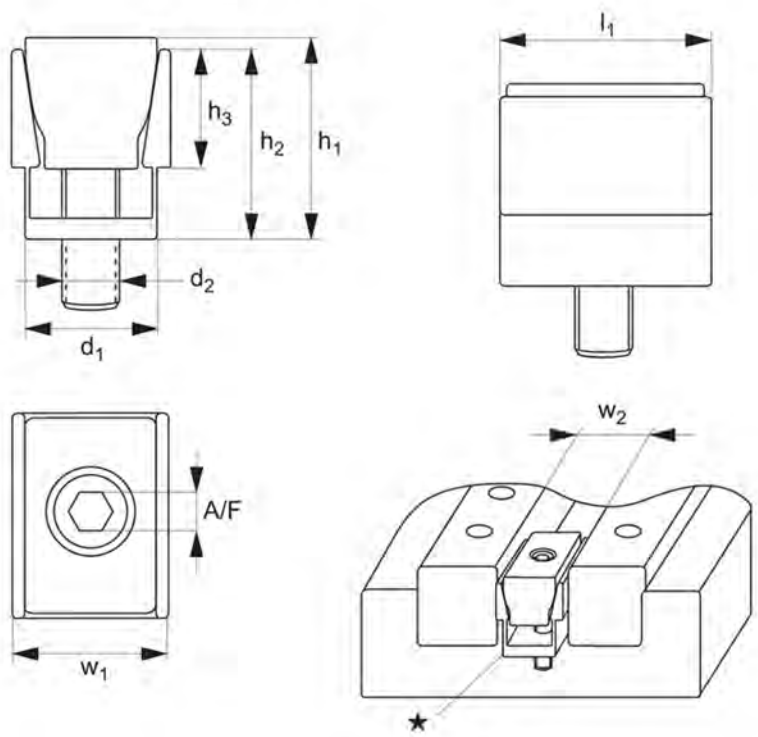



Part Number	d1	d2	h1	h3	l1	w1
20267070	5.3	M2.5	6.9	3.6	8.1	6.1
20267087	7.9	M2.5	9.7	4.7	11.9	9.1
20267094	10.4	M4	14.5	5.6	15.9	12.3
20267100	16.1	M6	19.0	9.5	23.8	18.6
20267117	20.8	M8	25.9	12.7	31.7	24.8
20267124	30.8	M12	38.6	19.0	47.6	37.3
20267131	41.2	M16	51.5	25.4	63.5	49.7

Uniforce Clamps - Long Length

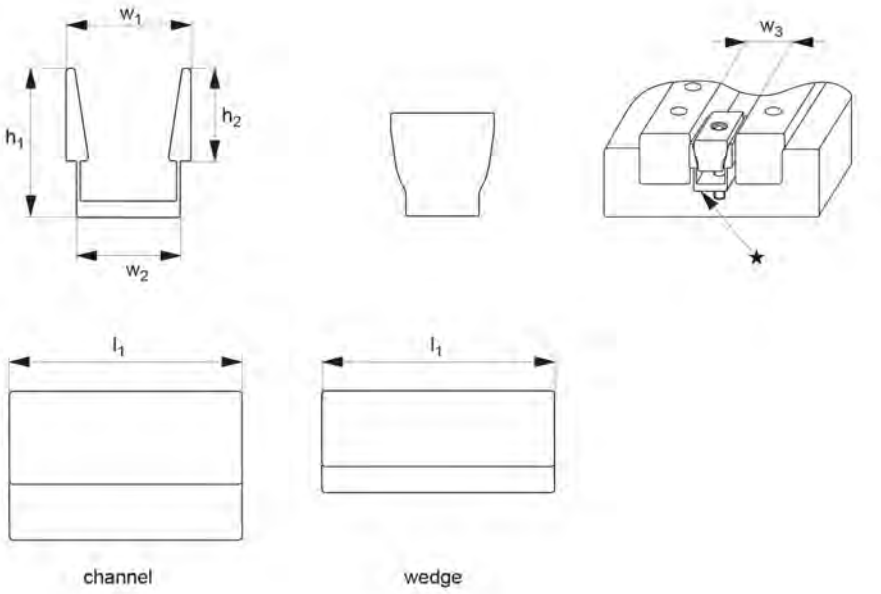



Features

- Useful in situations involving longer lengths and high forces.
- It can handle heavy loads and tremendous pressure while maintaining functionality.
- Used in industries such as construction metalworking or precision machining.

Specifications

Material: Steel, Aluminium

These Uniforce Clamps can clamp two components with the same clamping action as a single clamp, which is useful in situations involving longer lengths and high forces. It is extremely strong, long-lasting, and versatile. They can handle heavy loads and tremendous pressure while maintaining functionality.

It is particularly effective for clamping a large number of workpieces. The precise and regulated clamping provided by the smooth sliding motion and robust locking mechanism ensures excellent stability and precision. Used in industries such as construction metalworking or precision machining.

Uniforce Clamps - Long Length

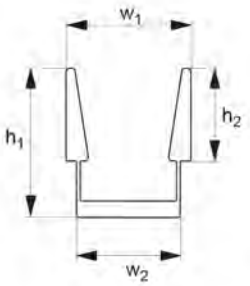



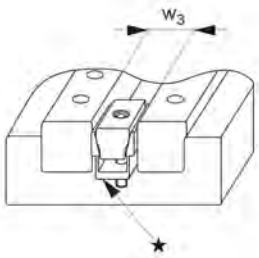



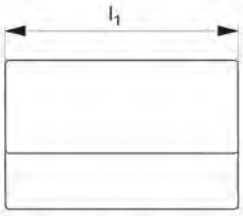

channel

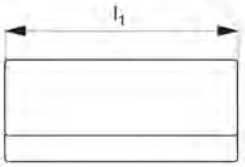

wedge

Part Number	Clamp Type	w1	Material
20265410	Channel only	9.1	Aluminium
20265427	Channel only	12.3	Aluminium
20265434	Channel only	18.6	Aluminium
20265441	Channel only	24.8	Aluminium
20265458	Channel only	37.3	Aluminium
20265465	Channel only	49.7	Aluminium
20265472	Wedge only	9.1	Steel
20265489	Wedge only	12.3	Steel
20265496	Wedge only	18.6	Steel
20265502	Wedge only	24.8	Steel
20265519	Wedge only	37.3	Steel
20265526	Wedge only	49.7	Steel

Uniforce Clamps - Machinable

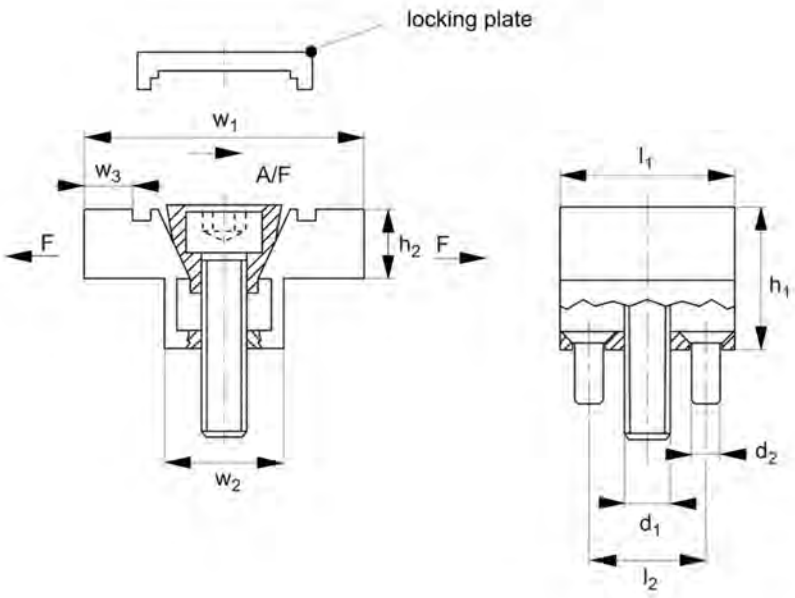



Features

- It clamps two components with the same clamping action as a single clamp.
- It can withstand huge weights and extreme pressure while remaining functioning.
- Used in industries such as construction metalworking or precision machining.

Specifications

Material: Aluminium

These Machinable Uniforce Clamps can clamp two components with the same clamping action as a single clamp. The clamp jaws include excess material that may be machined away to fit the shape of your workpiece. It is extremely strong, long-lasting, and adaptable. They can withstand huge weights and extreme pressure while remaining functioning.

It is very useful for clamping a large number of workpieces. The smooth sliding action and sturdy locking mechanism enable precise and controlled clamping, ensuring exceptional stability and accuracy. Used in industries such as construction metalworking or precision machining.

Uniforce Clamps - Machinable

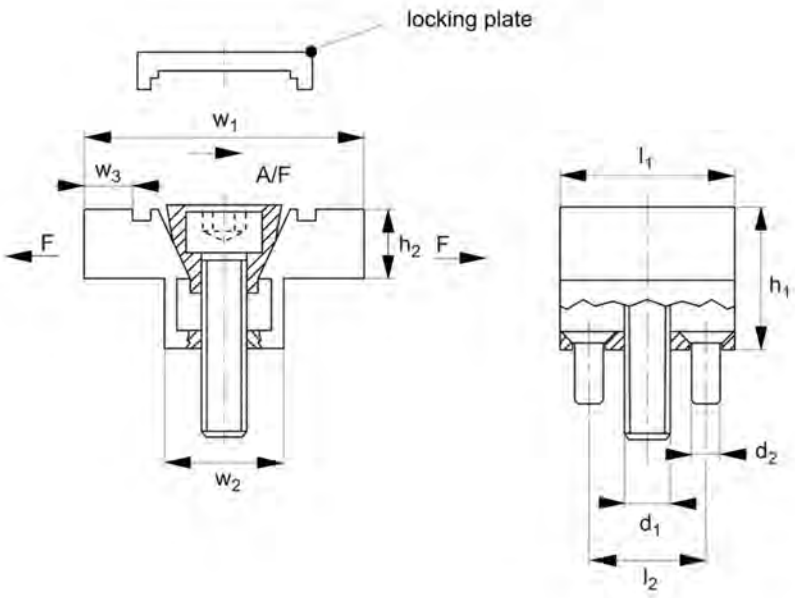



Part Number	d1	d2	h1	h2	l1	l2	w1
20267148	M4	M2	12.7	6.3	15.7	10.2	28.6
20267155	M6	M4	19.1	9.4	23.9	15.9	38.1
20267162	M8	M4	25.4	12.7	31.8	20.6	50.8
20267179	M12	M5	38.1	19.1	47.5	30.5	76.2
20267186	M16	M6	50.8	25.4	63.5	41.3	101.6

Variable Hexagon Clamps

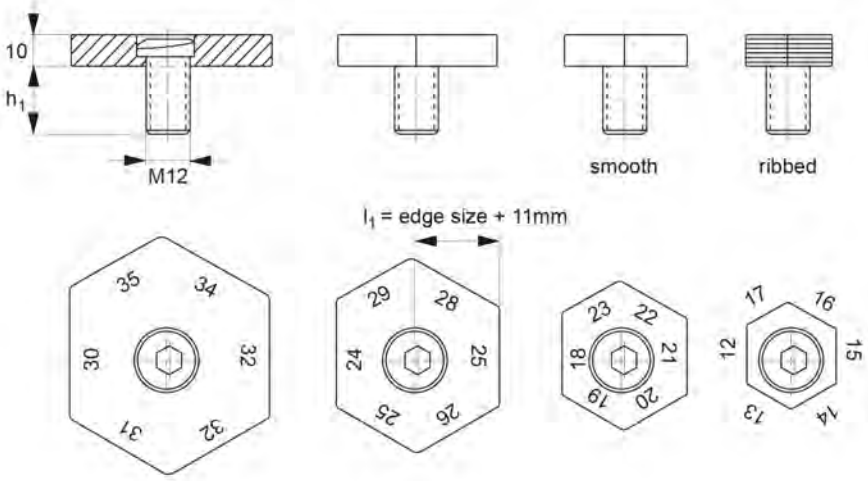



Features

- It features a strong and dependable grip while being low-profile.
- It can reduce the expense of clamping on fixtures.
- Ideal for electronics assembly, machining centres, and medical equipment.

Specifications

Material: Hardened Steel

These Variable Hexagon Clamps are made for firmly holding and gripping workpieces with limited vertical space. It delivers a strong and dependable grip while being low-profile, making it suitable for applications with limited space.

The clamping surface's hexagonal design provides several gripping areas, ensuring a firm grasp on the workpiece. It can also help to reduce the expense of clamping on fixtures.

Installed using an Allen key and available with smooth or ribbed faces. An eccentric screw (provided) is used to operate the device. Its small size makes it ideal for electronics assembly, machining centres, and medical equipment.

Variable Hexagon Clamps

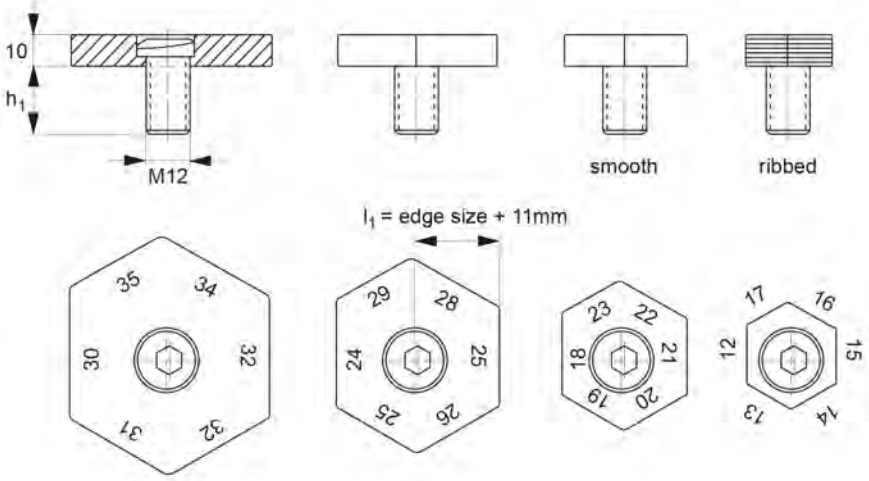



Part Number	h1	l1	Clamp stroke	Clamping force max. kN	Finish
20266738	22.0	12.0-17.0	2.0	18.0	Smooth
20266745	22.0	18.0-23.0	2.0	18.0	Smooth
20266752	22.0	24.0-29.0	2.0	18.0	Smooth
20266769	22.0	30.0-35.0	2.0	18.0	Smooth
20266776	22.0	12.0-17.0	2.0	18.0	Ribbed
20266783	22.0	18.0-23.0	2.0	18.0	Ribbed
20266790	22.0	24.0-29.0	2.0	18.0	Ribbed
20266806	22.0	30.0-35.0	2.0	18.0	Ribbed

Versagrip Grippers & Clamps

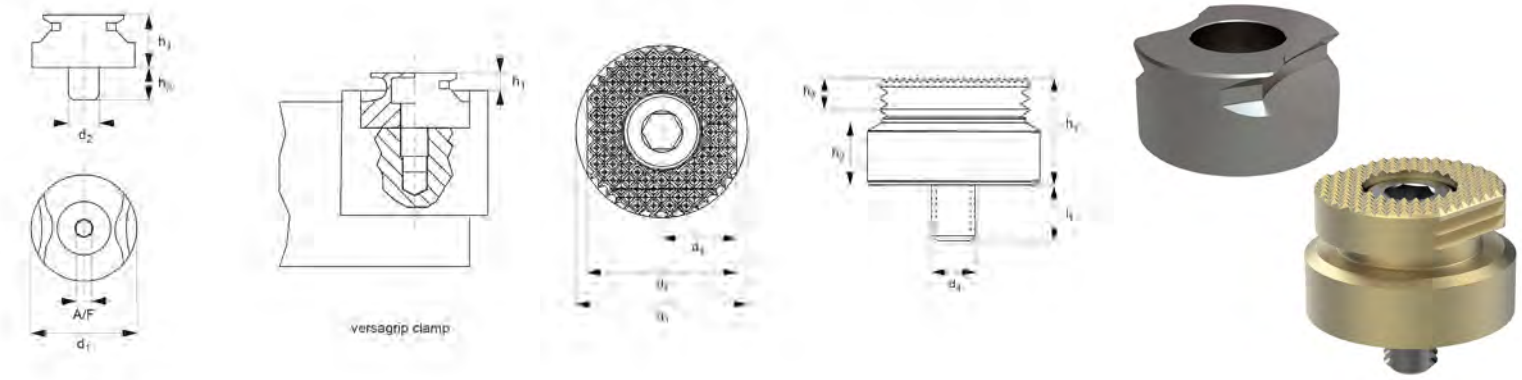

Features

- Have a reinforced grip with puncturing teeth designed to bite into the workpiece.
- Provide a secure and adjustable grasp on irregularly shaped items.
- Used in plumbing, electrical work, machining, and automotive applications.

Specifications

Material: Steel, Hardened Steel

These Versagrip Grippers and Clamps have a reinforced grip with puncturing teeth designed to bite into the workpiece, limiting lateral and horizontal movement. They can grasp even flame cut and negative draft parts.

These grippers and clamps provide a secure and adjustable grasp on irregularly shaped items, circular tubes, or flat surfaces. The clamping force may be adjusted to meet the application's individual needs, guaranteeing excellent stability and properly spreading the force, minimising the possibility of slippage or movement during operation.

They are simple to install in the application and are commonly used in plumbing, electrical work, machining, and automotive.

Versagrip Grippers & Clamps

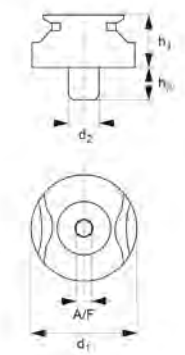

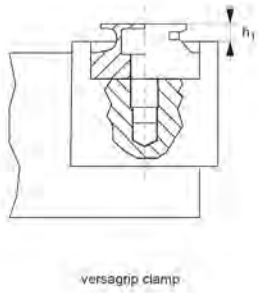

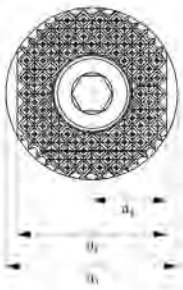

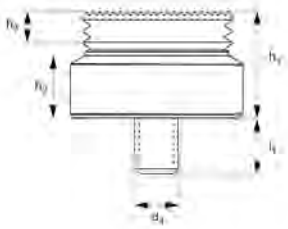



Part Number	Type	h1	h2	d1
20267551	Clamp	9.5	5.9	19.1
20266257	Gripper	11.94	6.73	19.0-19.05

Vice Jaw Sets

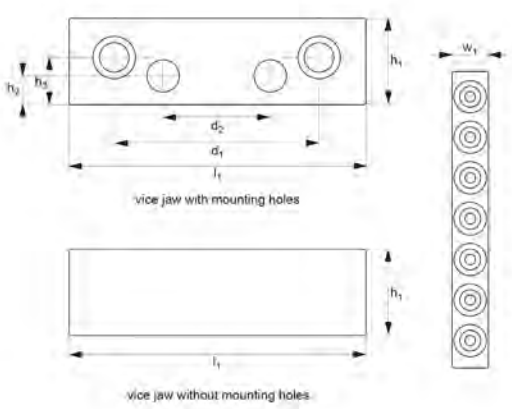

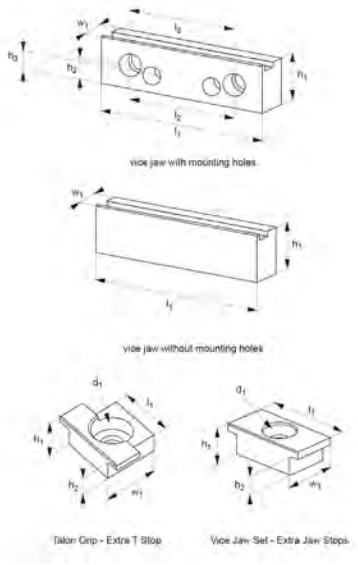



Features

- Allows to do aggressive machining operations while clamping on as little as 1.5mm.
- Meant to fit onto the jaws of a vise.
- Used in heavy-duty applications such as metalworking, or composites.

Specifications

Material: Steel

These Vice Jaw Set for TalonGrip Clamps are a simple bolt-on system that allows you to execute aggressive machining operations while clamping on as little as 1.5mm. It will improve the functioning of conventional vises. It is meant to fit onto the jaws of a vise, giving a customised gripping surface for certain purposes.

Ideal for tiny lot quantities, challenging applications, or proto-type work where creating a fixture would be costly. It is utilised in heavy-duty applications such as metalworking, composites, and precise workholding and comes with a jaw stop.

Vice Jaw Sets

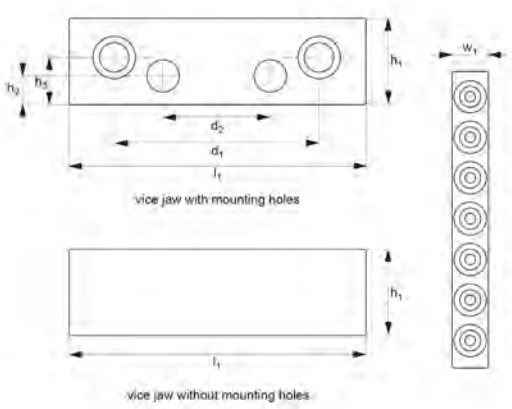

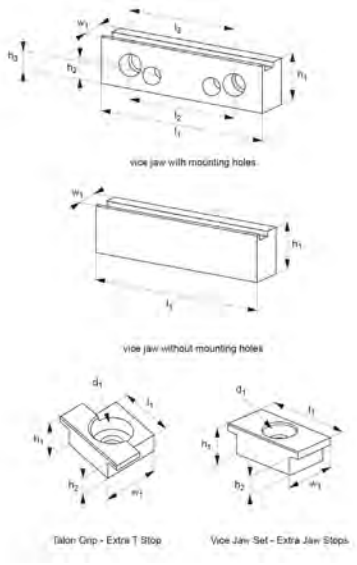



Part Number	Type	h1	l1	w1
20267469	Vice jaw set	37.6	100.0	25.4
20267476	Vice jaw set	43.9	150.0	25.4
20267483	Vice jaw set	43.9	200.0	25.4
20265403	Vice jaw set	62.2	200.0	31.8
20267490	Vice jaw set	37.6	100.0	25.4
20267506	Vice jaw set	43.9	150.0	25.4
20267513	Vice jaw set	43.9	200.0	25.4
20267520	Jaw stop small	6.4	19.0	12.7
20267537	Jaw stop large	7.9	19.0	12.7
20267568	Vice jaw set	47.75	150	25.4
20267575	Vice jaw set	47.75	200	25.4
20267582	Vice jaw set	47.75	150	25.4
20267599	Vice jaw set	47.75	200	25.4

Riser Plates

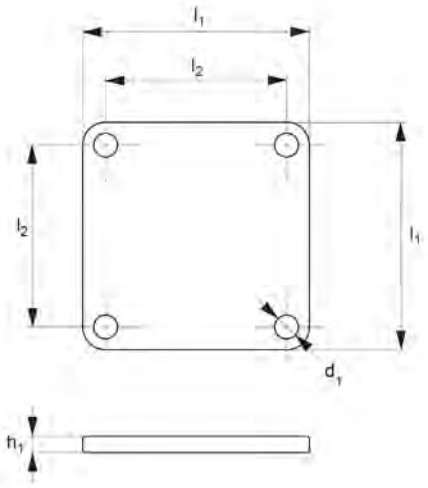

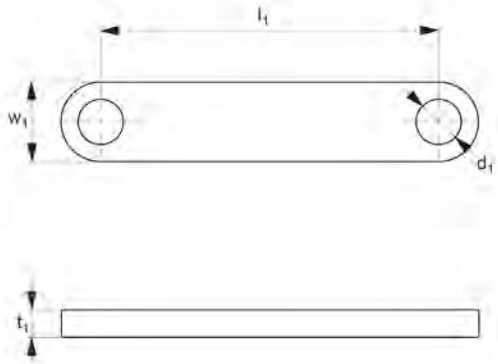



Features

- There are two varieties: one that is rectangular and one that is square.
- It is used to increase the locking surface's height, making it more accessible and simpler to use.

Specifications

Material: Stainless Steel

Rise plates are mechanical components that are used in conjunction with sliding locks to elevate and support other components or objects. There are two varieties in this range: one that is rectangular and one that is square.

It is used to increase the locking surface's height, making it more accessible and simpler to use. They are corrosion resistant, guaranteeing long-lasting performance even in harsh settings, and they keep their place and do not move or shift during usage.

These are widely employed in a variety of industrial applications such as automotive, aerospace, and medical equipment.

Part Number	l1	d1	Material
20191214	40.0	4.5	Stainless Steel
20191221	50.0	5.5	Stainless Steel
20190958	40.0	5.5	Stainless Steel
20190965	40.0	5.5	Stainless Steel

Scale Plates

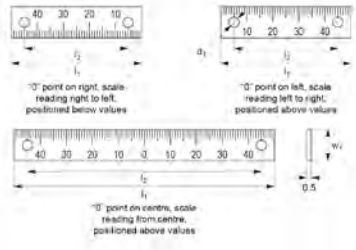

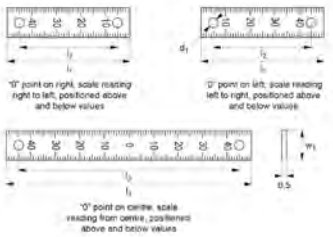



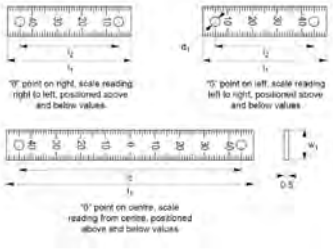

Features

- There are two variants available, each with a distinct mounting style.
- Employed in a variety of industrial applications such as automotive, aerospace, and medical equipment.
- Feature a marked scale or grid pattern that runs along one or both edges, giving users an indication.

Specifications

Material: Stainless Steel, Aluminium

Scale Plates are used to precisely and repeatedly place sliding clamps along linear guides or shafts. There are two variants available, each with a distinct mounting style. On the one hand, single scale plates and, on the other hand, double scale plates. Within each of them, there is a type of mounting type. Screw mounting type with drilled holes or adhesive mounting features an outline of the screw hole location, not drilled.

They feature a marked scale or grid pattern that runs along one or both edges, giving users an indication. It is durable and wear resistant.

These are widely employed in a variety of industrial applications such as automotive, aerospace, and medical equipment.

Scale Plates

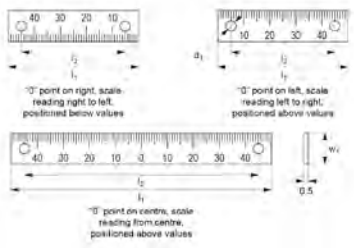

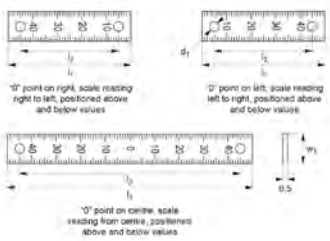



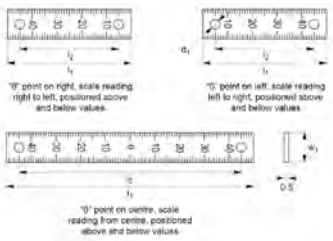

Part Number	Type	Mounting type	Number of mounting holes	l1	l2	Material
20191733	Double Scale	Adhesive	2.0	50.0	40.0	Aluminium
20191740	Double Scale	Adhesive	2.0	100.0	90.0	Aluminium
20191757	Double Scale	Adhesive	2.0	50.0	40.0	Aluminium
20191764	Double Scale	Adhesive	2.0	100.0	90.0	Aluminium
20191771	Double Scale	Adhesive	2.0	100.0	90.0	Aluminium
20191313	Single Scale	Adhesive	2.0	50.0	40.0	Aluminium
20191320	Single Scale	Adhesive	2.0	100.0	90.0	Aluminium
20192167	Single Scale	Adhesive	3.0	150.0	70.0	Aluminium
20192181	Single Scale	Adhesive	3.0	200.0	95.0	Aluminium
20191337	Single Scale	Adhesive	2.0	50.0	40.0	Aluminium
20191344	Single Scale	Adhesive	2.0	100.0	90.0	Aluminium
20192174	Single Scale	Adhesive	3.0	150.0	70.0	Aluminium
20192198	Single Scale	Adhesive	3.0	200.0	95.0	Aluminium
20191351	Single Scale	Adhesive	2.0	100.0	90.0	Aluminium
20191368	Single Scale	Adhesive	3.0	200.0	95.0	Aluminium
20191375	Single Scale	Adhesive	2.0	50.0	40.0	Aluminium
20191382	Single Scale	Adhesive	2.0	100.0	90.0	Aluminium
20191399	Single Scale	Adhesive	3.0	150.0	70.0	Aluminium
20191405	Single Scale	Adhesive	3.0	200.0	95.0	Aluminium
20191412	Single Scale	Adhesive	2.0	50.0	40.0	Aluminium
20191429	Single Scale	Adhesive	2.0	100.0	90.0	Aluminium
20191436	Single Scale	Adhesive	3.0	150.0	70.0	Aluminium

Scale Plates

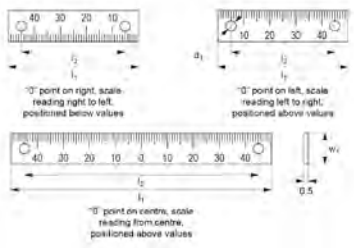

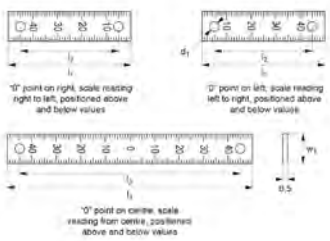



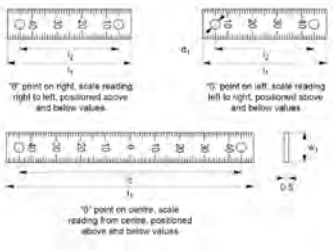

Part Number	Type	Mounting type	Number of mounting holes	l1	l2	Material
20191443	Single Scale	Adhesive	3.0	200.0	95.0	Aluminium
20191450	Single Scale	Adhesive	2.0	100.0	90.0	Aluminium
20191467	Single Scale	Adhesive	3.0	200.0	95.0	Aluminium
20191832	Single Scale	Adhesive	2.0	50.0	40.0	Stainless Steel
20191849	Single Scale	Adhesive	2.0	100.0	90.0	Stainless Steel
20191856	Single Scale	Adhesive	2.0	50.0	40.0	Stainless Steel
20191863	Single Scale	Adhesive	2.0	100.0	90.0	Stainless Steel
20191870	Single Scale	Adhesive	2.0	100.0	90.0	Stainless Steel
20191788	Double Scale	Screw Mount	2.0	50.0	40.0	Aluminium
20191795	Double Scale	Screw Mount	2.0	100.0	90.0	Aluminium
20191801	Double Scale	Screw Mount	2.0	50.0	40.0	Aluminium
20191818	Double Scale	Screw Mount	2.0	100.0	90.0	Aluminium
20191825	Double Scale	Screw Mount	2.0	100.0	90.0	Aluminium
20191474	Single Scale	Screw Mount	2.0	50.0	40.0	Aluminium
20191481	Single Scale	Screw Mount	2.0	100.0	90.0	Aluminium
20191498	Single Scale	Screw Mount	3.0	150.0	70.0	Aluminium
20191504	Single Scale	Screw Mount	3.0	200.0	95.0	Aluminium
20191511	Single Scale	Screw Mount	6.0	500.0	100.0	Aluminium
20191528	Single Scale	Screw Mount	2.0	50.0	40.0	Aluminium
20191535	Single Scale	Screw Mount	2.0	100.0	90.0	Aluminium
20191542	Single Scale	Screw Mount	3.0	150.0	70.0	Aluminium
20191559	Single Scale	Screw Mount	3.0	200.0	95.0	Aluminium

Scale Plates

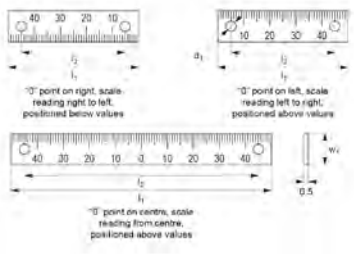

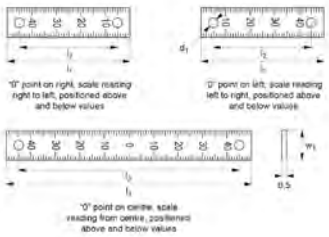



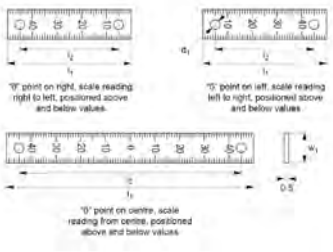

Part Number	Type	Mounting type	Number of mounting holes	l1	l2	Material
20191566	Single Scale	Screw Mount	6.0	500.0	100.0	Aluminium
20191573	Single Scale	Screw Mount	2.0	100.0	90.0	Aluminium
20191580	Single Scale	Screw Mount	3.0	200.0	95.0	Aluminium
20191597	Single Scale	Screw Mount	6.0	500.0	100.0	Aluminium
20191603	Single Scale	Screw Mount	2.0	50.0	40.0	Aluminium
20191610	Single Scale	Screw Mount	2.0	100.0	90.0	Aluminium
20191627	Single Scale	Screw Mount	3.0	150.0	70.0	Aluminium
20191634	Single Scale	Screw Mount	3.0	200.0	95.0	Aluminium
20191641	Single Scale	Screw Mount	6.0	500.0	100.0	Aluminium
20191658	Single Scale	Screw Mount	2.0	50.0	40.0	Aluminium
20191665	Single Scale	Screw Mount	2.0	100.0	90.0	Aluminium
20191672	Single Scale	Screw Mount	3.0	150.0	70.0	Aluminium
20191689	Single Scale	Screw Mount	3.0	200.0	95.0	Aluminium
20191696	Single Scale	Screw Mount	6.0	500.0	100.0	Aluminium
20191702	Single Scale	Screw Mount	2.0	100.0	90.0	Aluminium
20191719	Single Scale	Screw Mount	3.0	200.0	95.0	Aluminium
20191726	Single Scale	Screw Mount	6.0	500.0	100.0	Aluminium
20191887	Single Scale	Screw Mount	2.0	50.0	40.0	Stainless Steel
20191894	Single Scale	Screw Mount	2.0	100.0	90.0	Stainless Steel
20191900	Single Scale	Screw Mount	2.0	50.0	40.0	Stainless Steel
20191917	Single Scale	Screw Mount	2.0	100.0	90.0	Stainless Steel
20191924	Single Scale	Screw Mount	2.0	100.0	90.0	Stainless Steel

Sliding Clamps - for Slotted Hole

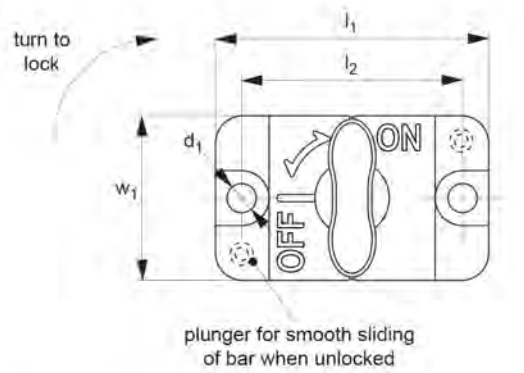



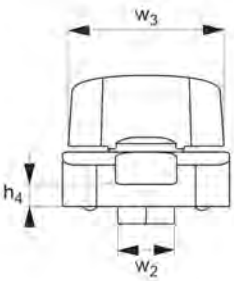

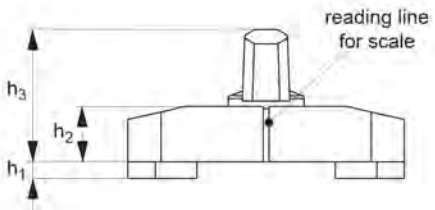

Features

- Resistant to temperatures of up to 90C .
- Used to quickly place, lock, release, and adjust sliding bars in applications.

Specifications

Material: Zinc

Sliding Clamps are used to quickly place, lock, release, and adjust sliding bars in applications. It is made up of two interlocking parts that give a firm hold on the equipment while also allowing for simple adjustment and alignment. A bolt or a latch mechanism can be used to open and shut the sliding clamps.

Sliding Clamps for slotted holes when used with a scale plate, the reading line on the sliding clamp enables quick, easy and accurate alignment. It is fixedly placed in an assembly for further stability. They are only suitable for straight linear movement of a sliding bar (not supplied) and cannot withstand any other applied stresses.

These are widely used in a wide range of industrial applications, including automotive, construction, and medical devices. They are resistant to temperatures of up to 90C.

Sliding Clamps - for Slotted Hole

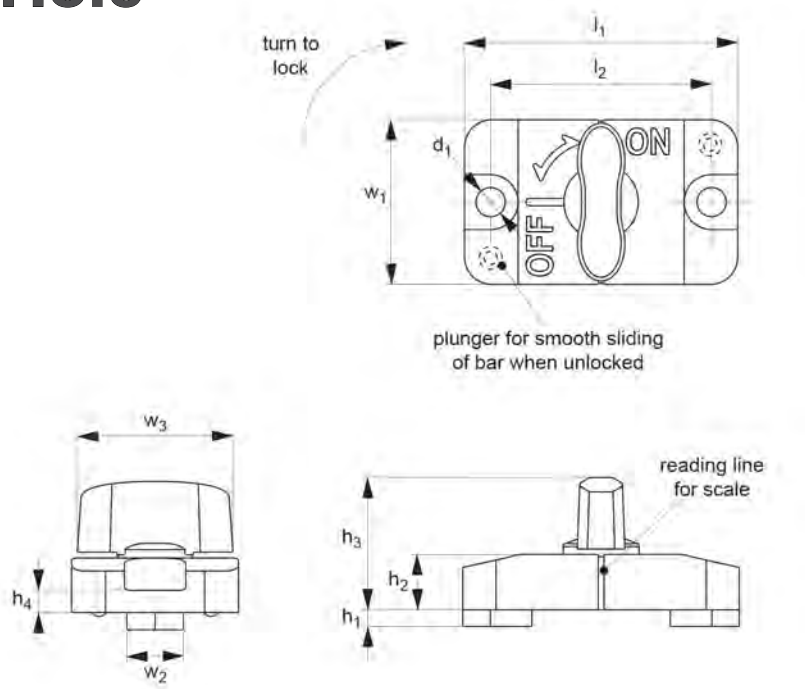



Part Number	Slot depth min	h1	Handle Material	Handle Colour
20190897	3.0	3.0	Plastic	Orange
20190903	3.0	3.0	Plastic	Black
20190910	3.0	3.0	Stainless Steel	Black
20190927	6.0	6.0	Plastic	Orange
20190934	6.0	6.0	Plastic	Black
20190941	6.0	6.0	Stainless Steel	Black

Sliding Clamps - for Solid Round Bar

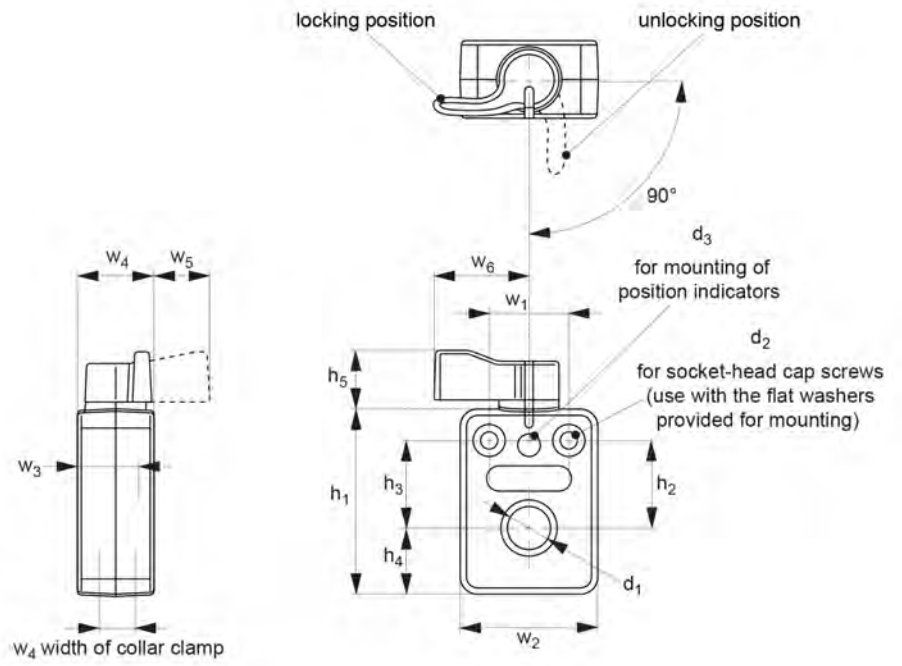



Features

- Sliding Clamps for solid round bars are used to quickly place, lock, release, and adjust solid round bars in applications.
- Mounted for a better stability, in a fixed position in the assembly.
- It pulls the spindle by the inner spring with 70N force to prevent chattering of the spindle.

Specifications

Material: Polyamide

Sliding Clamps for solid round bars are used to quickly place, lock, release, and adjust solid round bars in applications. It is mounted for a better stability, in a fixed position in the assembly.

Sliding Clamps can be for slotted holes for a solid sliding or for solid round bar. It pulls the spindle by the inner spring with 70N force to prevent chattering of the spindle. They are only suitable for straight linear movement of a solid round bar (not supplied) and cannot withstand any other applied stresses.

These are widely used in a wide range of industrial applications, including automotive, aerospace, and medical devices. It has teeth inside and it engages at every 7.2 (=360/50).

Sliding Clamps - for Solid Round Bar

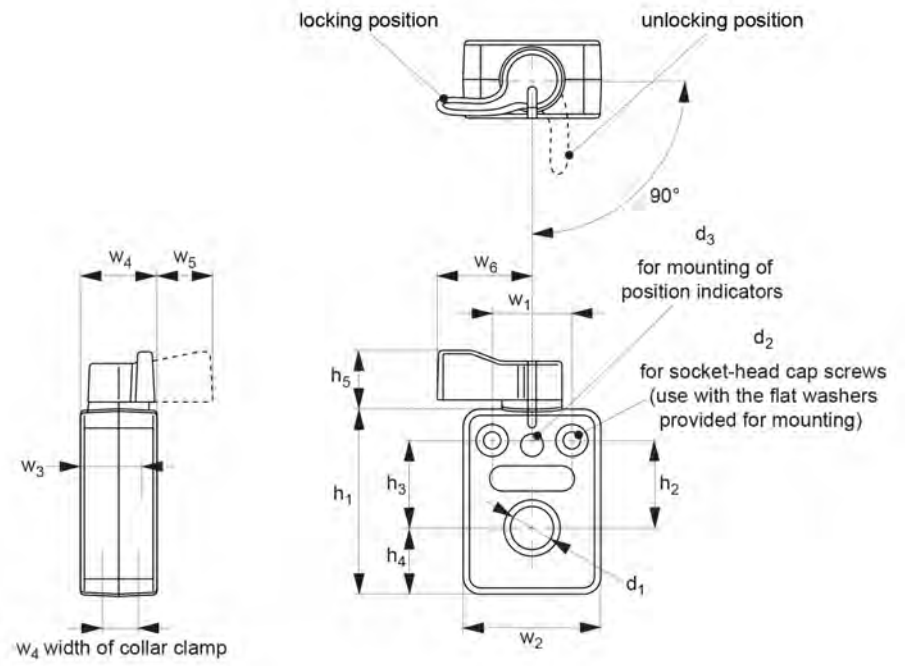



Part Number	d1	d2	h1	h2	W1	w2	W3
20192075	8.0	M4	48.5	23.5	21.0	36.0	14.0
20192082	10.0	M4	48.5	23.5	21.0	36.0	14.0
20192099	12.0	M4	48.5	23.5	21.0	36.0	14.0
20192105	14.0	M4	48.5	23.5	21.0	36.0	14.0
20191238	8.0	M4	48.5	23.5	21.0	36.0	14.0
20191245	8.0	M4	48.5	23.5	21.0	36.0	14.0
20191252	12.0	M4	48.5	23.5	21.0	36.0	14.0
20191276	14.0	M4	48.5	23.5	21.0	36.0	14.0
20192112	12.0	M5	69.0	17.0	34.0	51.0	12.5
20192129	15.0	M5	69.0	17.0	34.0	51.0	12.5
20192136	16.0	M5	69.0	17.0	34.0	51.0	12.5
20192143	20.0	M5	69.0	17.0	34.0	51.0	12.5
20191269	12.0	M5	69.0	17.0	34.0	51.0	12.5
20191283	15.0	M5	69.0	17.0	34.0	51.0	12.5
20191290	16.0	M5	69.0	17.0	34.0	51.0	12.5
20191306	20.0	M5	69.0	17.0	34.0	51.0	12.5

Sliding Clamps - for Solid Sliding Bar

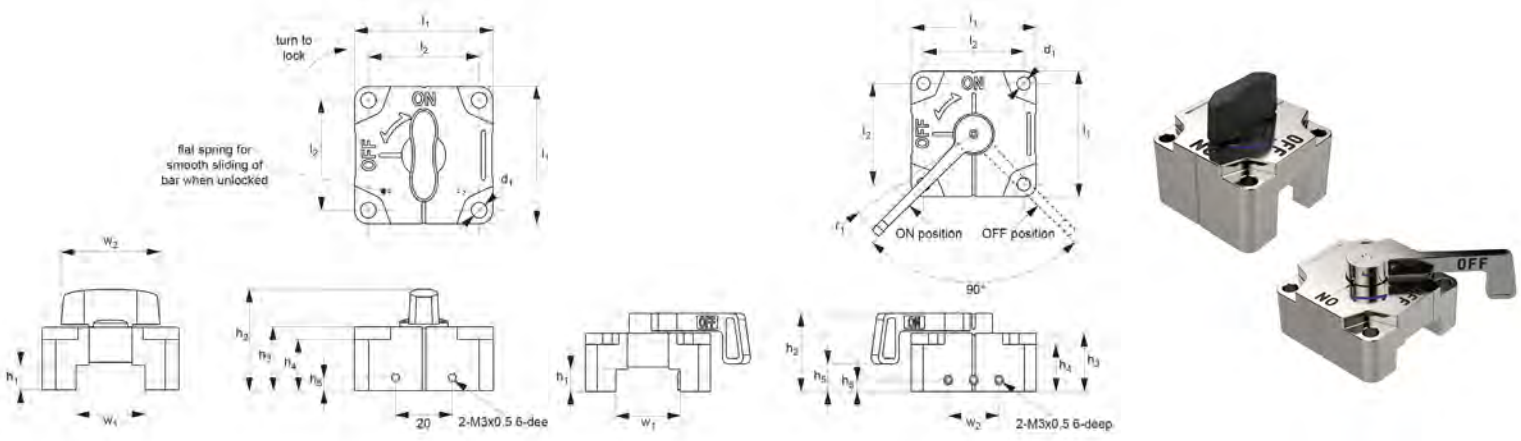

Features

Sliding Clamps for solid sliding bars are used to quickly place, lock, release, and adjust sliding bars in applications.

- Mounted for a better stability, in a fixed position in the assembly.
- It can be looked in place, through a 90 degree turn of the sliding clamp's handle.

Specifications

Material: Zinc

Sliding Clamps for solid sliding bars are used to quickly place, lock, release, and adjust sliding bars in applications. It is mounted for a better stability, in a fixed position in the assembly.

Sliding Clamps can be for slotted holes for a solid sliding or for solid round bar. With the clamp at its off position the sliding bar can be moved left or right, with two spring loaded ball plungers provide for free movement of bar. It can be looked in place, through a 90 degree turn of the sliding clamp's handle. They are only suitable for straight linear movement of a solid sliding bar (not supplied) and cannot withstand any other applied stresses.

These are widely used in a wide range of industrial applications, including automotive, construction, and medical devices. They are resistant to temperatures of up to 90C .

Sliding Clamps - for Solid Sliding Bar

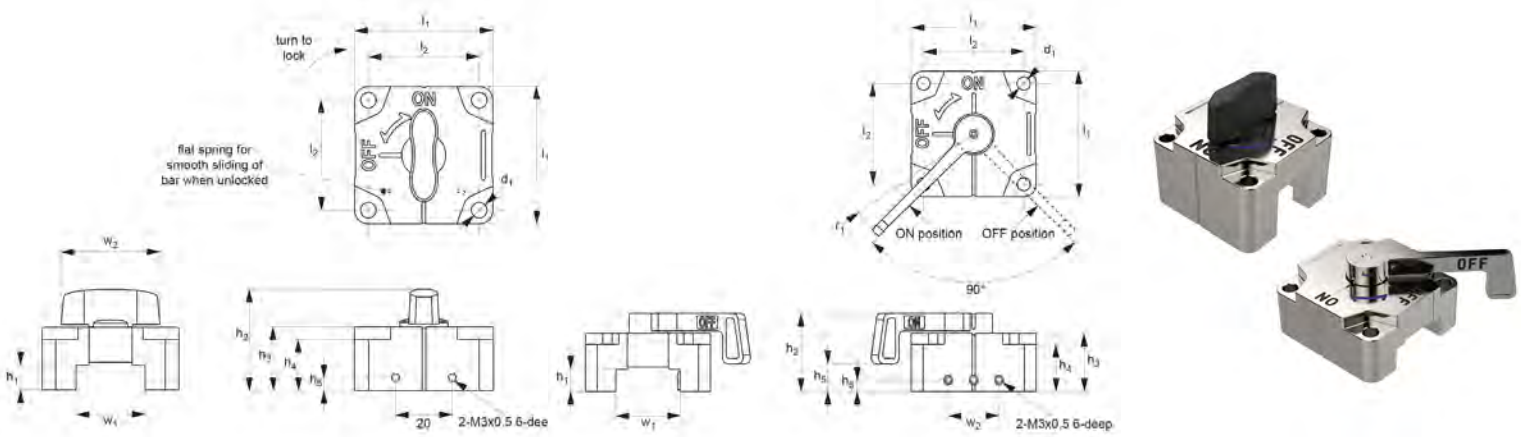

Part Number	For bar width x height	d1	h1	l2	h3	h5	l1
20190972	12x12	4.5	12.0	32.0	22.0	6.0	40.0
20190989	16x16	4.5	16.0	32.0	26.0	8.0	40.0
20191030	12x12	4.5	12.0	32.0	22.0	6.0	40.0
20191047	16x16	4.5	16.0	32.0	26.0	8.0	40.0
20191092	12x12	4.5	12.0	32.0	22.0	6.0	40.0
20191108	16x16	4.5	16.0	32.0	26.0	8.0	40.0
20191153	12x12	4.5	12.0	40.0	22.0	11.0	6.0
20191160	16x16	4.5	16.0	32.0	26.0	15.0	40.0
20190996	25x9	5.5	9.0	40.0	23.0	4.5	50.0
20191009	25x12	5.5	12.0	40.0	26.0	6.0	50.0
20191016	32x12	5.5	12.0	40.0	26.0	6.0	50.0
20191023	32x16	5.5	16.0	40.0	30.0	8.0	50.0
20191054	25x9	5.5	9.0	40.0	23.0	4.5	50.0
20191061	25x12	5.5	12.0	40.0	26.0	6.0	50.0
20191078	32x12	5.5	12.0	40.0	26.0	6.0	50.0
20191085	32x16	5.5	16.0	40.0	30.0	8.0	50.0
20191115	25x9	5.5	9.0	40.0	23.0	4.5	50.0
20191122	25x12	5.5	12.0	40.0	26.0	6.0	50.0
20191139	32x12	5.5	12.0	40.0	26.0	6.0	50.0
20191146	32x16	5.5	16.0	40.0	30.0	8.0	50.0

Sliding Clamps - for Solid Sliding Bar

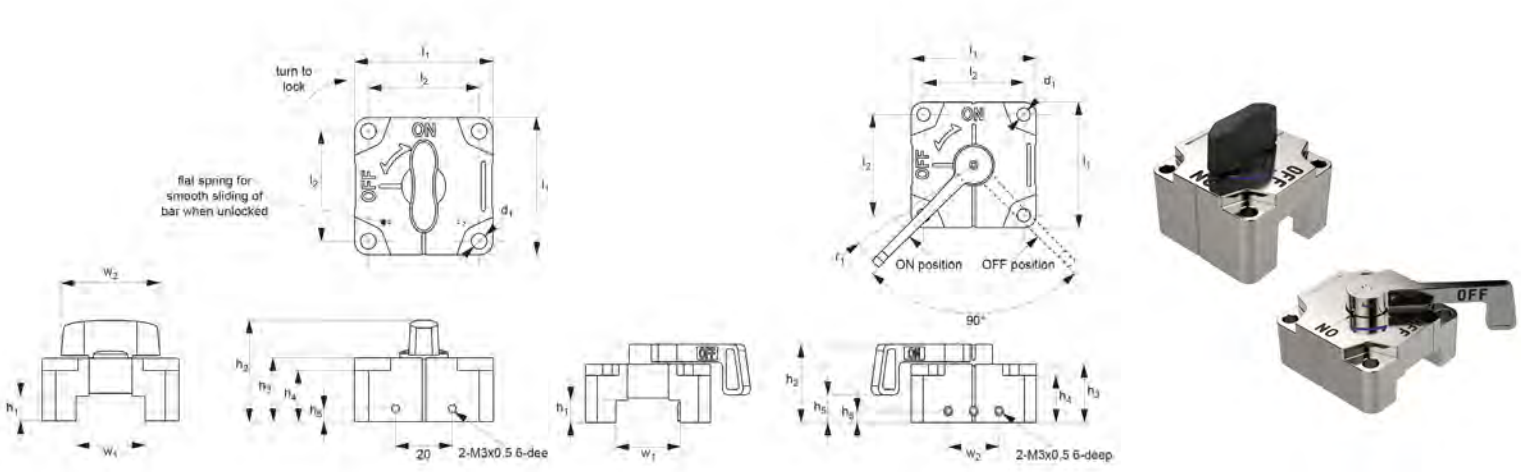

Part Number	For bar width x height	d1	h1	l2	h3	h5	l1
20191177	25x9	5.5	9.0	40.0	23.0	11.0	50.0
20191184	25x12	5.5	12.0	40.0	26.0	14.0	50.0
20191191	32x12	5.5	12.0	40.0	26.0	14.0	50.0
20191207	32x16	5.5	16.0	40.0	30.0	18.0	50.0

Spiral Cam Clamps

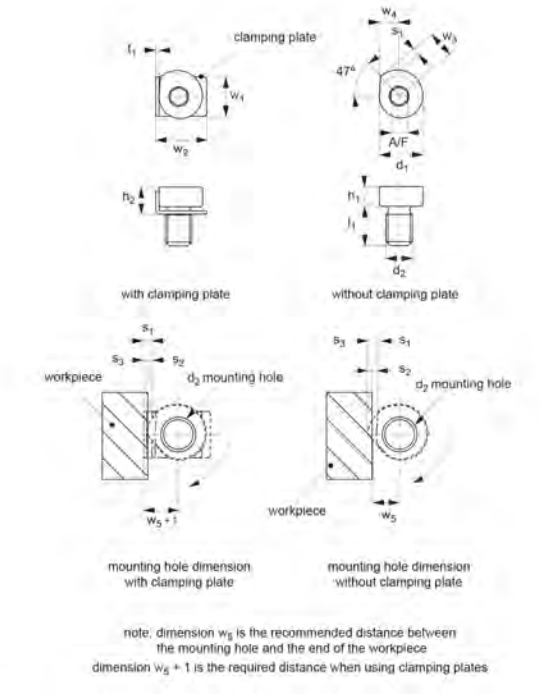



Features

- It has a spiral cam mechanism for quick tightening and relaxing of the grip.
- It is extremely compact and low-profile, making it excellent for multi-component fastening.
- Used in automotive, construction, manufacturing, and general engineering applications.

Specifications

Material: Steel

Spiral Cam Clamps are used when something has to be clamped or fastened using a self-locking clamp. It has a spiral cam mechanism for quick tightening and relaxing of the grip. Users may modify the clamping force by simply turning the cam to meet the applications individual needs.

A shaft through the middle is used to operate it mechanically, pneumatically, or hydraulically. It is extremely compact and low-profile, making it excellent for multi-component fastening.

The self-locking effect remains active during pressure failure, resulting in substantially improved operational safety via pneumatic and hydraulic clamping. Used in automotive, construction, manufacturing, and general engineering applications.

Spiral Cam Clamps

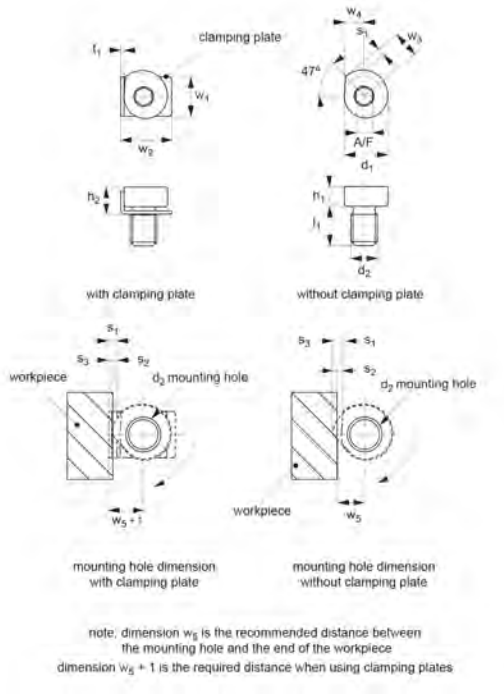



Part Number	Includes	d1	d2	h1	l1	w3	w4
20265892	Without Clamping Plate	10.0	M6x1.00	5.0	9.0	6.8	5.0
20266004	Without Clamping Plate	12.0	M8x1.25	6.0	12.0	8.2	6.0
20266264	Without Clamping Plate	14.0	M10x1.50	7.0	15.0	9.5	7.0
20266271	Without Clamping Plate	16.0	M12x1.75	8.0	18.0	10.9	8.0
20265779	With Clamping Plate	10.0	M6x1.00	5.0	9.0	6.8	5.0
20265939	With Clamping Plate	12.0	M8x1.25	6.0	12.0	8.2	6.0
20265946	With Clamping Plate	14.0	M10x1.50	7.0	15.0	9.5	7.0
20265953	With Clamping Plate	16.0	M12x1.75	8.0	18.0	10.9	8.0

Spiral Cam Clamps - Actuating Handle

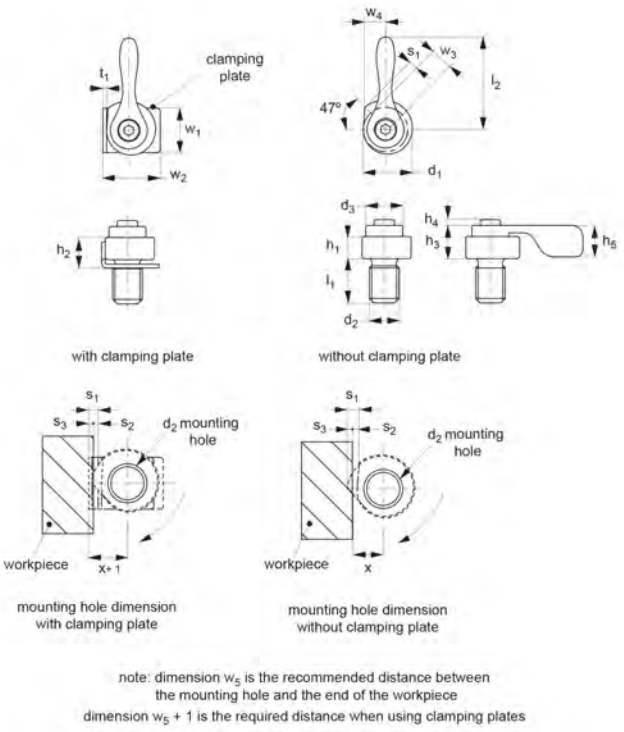



Features

- It has a spiral cam mechanism for quick tightening and relaxing of the grip.
- Actuating handle is easy to grab and enables smooth, effortless action.
- Used in automotive, construction, manufacturing, and general engineering applications.

Specifications

Material: Steel

Spiral Cam Clamps with actuating handle are used when something has to be clamped or fastened using a self-locking clamp. It has a spiral cam mechanism for quick tightening and relaxing of the grip. Users may modify the clamping force by simply turning the cam to meet the applications individual needs.

The actuating handle is easy to grab and enables smooth, effortless action. Simply spinning the handle adjusts the clamping force to meet the precise needs of the application. It is extremely compact and low-profile, making it excellent for multi-component fastening.

The self-locking effect remains active during pressure failure, resulting in substantially improved operational safety via pneumatic and hydraulic clamping. Used in automotive, construction, manufacturing, and general engineering applications.

Spiral Cam Clamps - Actuating Handle

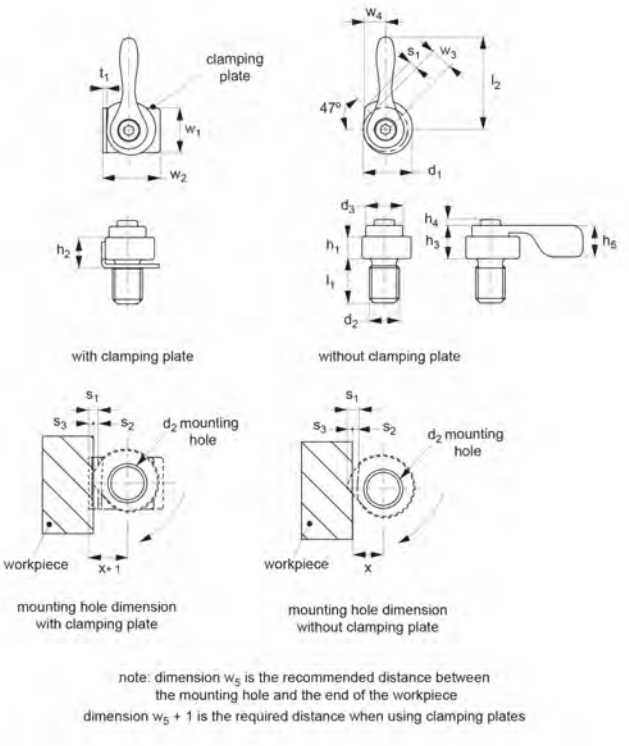



Part Number	Includes	d1	d2	d3	h1	h3	h4
20266288	Without Clamping Plate	12.0	M8x1.25	10.0	6.0	9.0	1.5
20266295	Without Clamping Plate	14.0	M10x1.50	12.0	7.0	11.0	1.8
20266301	Without Clamping Plate	16.0	M12x1.75	14.0	8.0	13.0	2.2
20266318	With Clamping Plate	12.0	M8x1.25	10.0	6.0	9.0	1.5
20266325	With Clamping Plate	14.0	M10x1.50	12.0	7.0	11.0	1.8
20266332	With Clamping Plate	16.0	M12x1.75	14.0	8.0	13.0	2.2

One-Touch Fastener - Ball Clamping

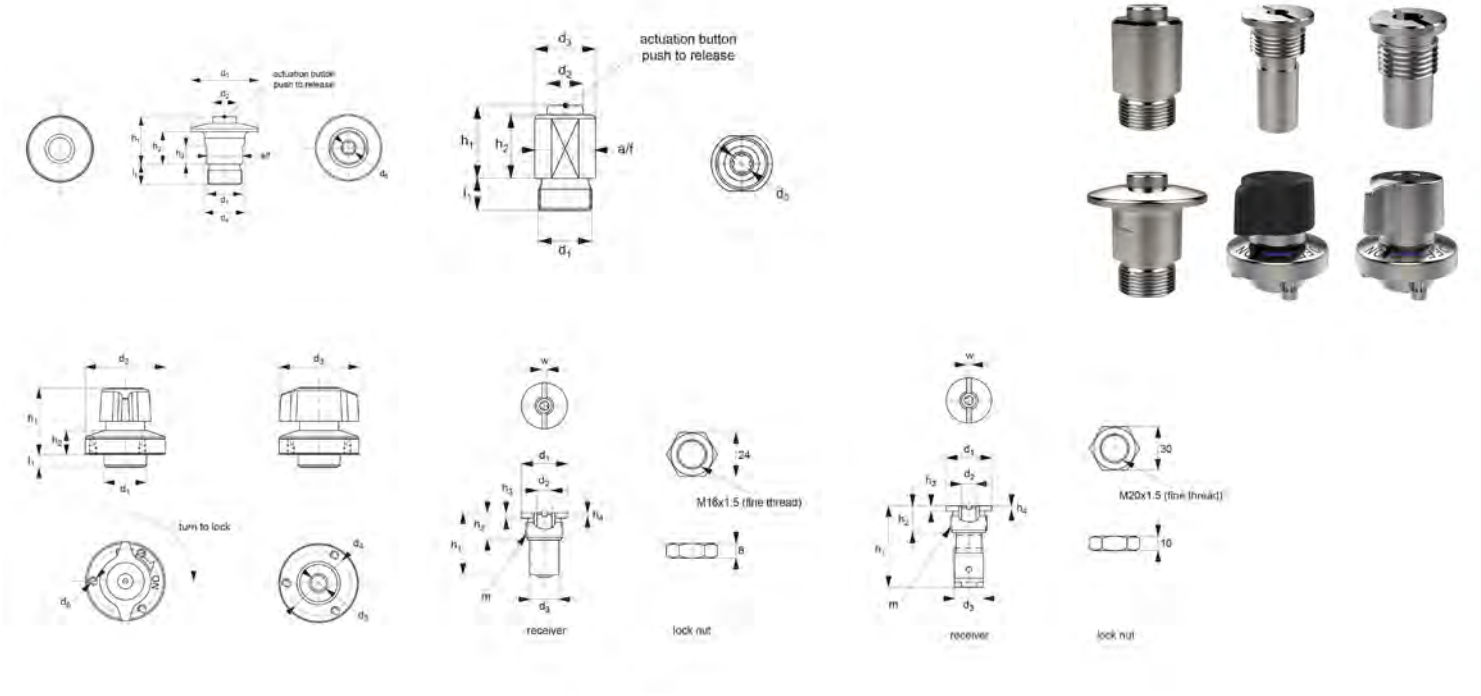

Features

- Durable and provides a secure and robust fastening solution.
- It is made up of a body, a spring, and a ball bearing.
- They can be utilised for applications such as drive belts or machine coverings.

Specifications

Material: Steel, Stainless Steel

One-touch fasteners with ball clamping are ideal for applications requiring quick and recurring changes over tooling or setups using a single touch. It is durable and provides a secure and robust fastening solution.

It is made up of a body, a spring, and a ball bearing. The spring holds the ball bearing in position, and when pressed, it contacts the object to be clamped, firmly locking it in place. When the fastener is pulled again, the ball bearing releases the item, allowing it to be readily removed.

These are widely used in a wide range of industrial applications, including automotive, aerospace, and medical devices. They can be utilised for applications such as drive belts or machine coverings.

One-Touch Fastener - Ball Clamping

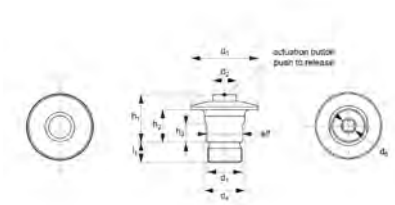

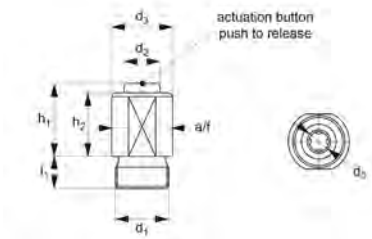



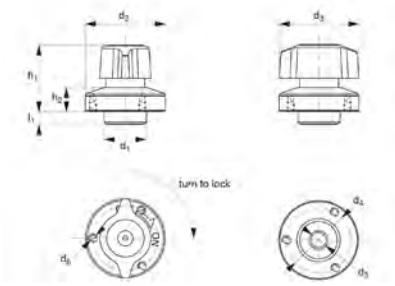

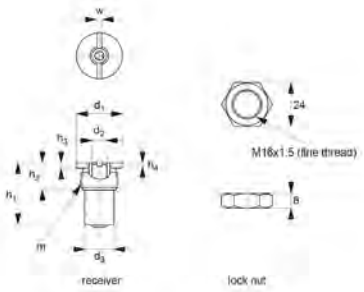

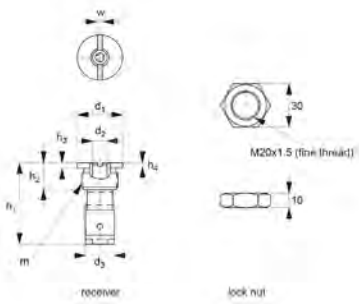

Part Number	d2	d3	h1	h2	Clamping force N	Shear strength N	Material
20190354	8.0	14.0	29.0	15.0	7.0	1800.0	Steel
20190361	8.0	14.0	29.0	15.0	15.0	1800.0	Steel
20190330	8.0	16.0	45.0	15.0	7.0	1800.0	Steel
20190347	8.0	16.0	45..0	15.0	17.0	1800.0	Steel
20190569	11.0	19.0	23.0	19.0	6.0	1100.0	Stainless Steel
20190576	25.0	25.0	23.0	6.5	7.0	1100.0	Steel
20190736	25.0	25.0	23.0	6.5	7.0	1100.0	Steel
20190743	25.0	25.0	23.0	6.5	7.0	1100.0	Stainless Steel
20190699	11.0	32.0	23.0	15.5	6.0	1100.0	Stainless Steel
20191979	34.0	34.0	28.0	10.0	9.0	1800.0	Steel
20190767	34.0	34.0	28.0	10.0	9.0	1800.0	Steel
20190750	34.0	34.0	28.0	10.0	9.0	1800.0	Stainless Steel

One-Touch Fastener - Ball Locking

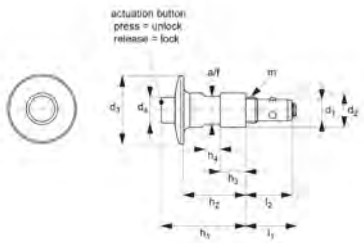

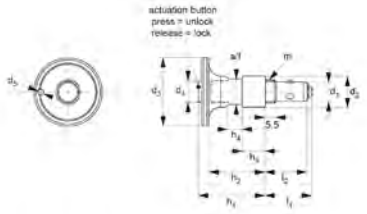



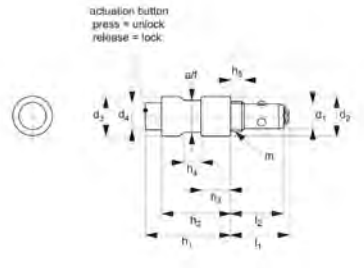

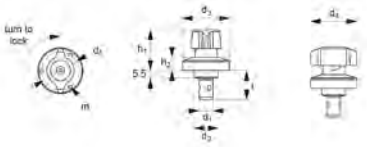

Features

- It is durable and provides a secure and robust fastening solution.
- It is made up of three parts: a body, a spring, and a ball bearing.
- Used in a wide range of industrial applications, including automotive, aerospace, and medical devices.

Specifications

Material: Stainless Steel, Steel

One-touch fasteners with ball locking are ideal for applications requiring quick and recurring changes over tooling or setups using a single touch. It is durable and provides a secure and robust fastening solution.

It is made up of three parts: a body, a spring, and a ball bearing. The spring holds the ball bearing in place, and when pressed, it disengages from the body, releasing the fastener. The ball bearing secures the fastener when it is pushed back into the body.

These are widely used in a wide range of industrial applications, including automotive, aerospace, and medical devices. They are resistant to temperatures of up to 180C and can be utilised for applications such as drive belts or machine coverings.

One-Touch Fastener - Ball Locking

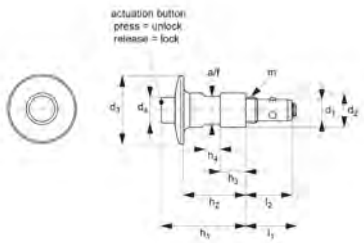

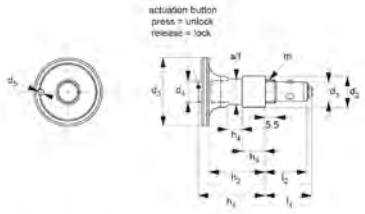



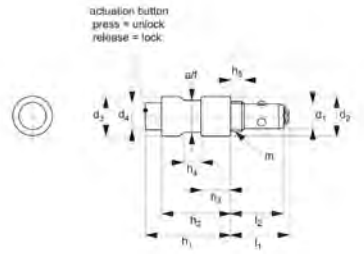

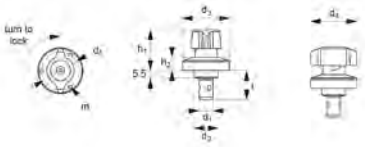

Part Number	For single panel thickness	d1 -0.05|-0.10	d2	d3	h1	m	Material
20190170	6-10	6.0	12.0	25.0	22.0	M8 x 1.25	Steel
20190194	6-10	6.0	12.0	23.0	26.0	M8 x 1.25	Stainless Steel
20190606	6-10	6.0	12.0	12.0	22.0	M8 x 1.25	Steel
20190620	6-10	6.0	12.0	25.0	22.0	M8 x 1.25	Stainless Steel
20190293	6-10	6.0	14.0	25.0	24.5	M2 x 0.4	Steel
20190637	6-10	6.0	14.0	25.0	24.5	M2 x 0.4	Stainless Steel
20190668	6-10	6.0	14.0	25.0	24.5	M2 x 0.4	Stainless Steel
20190187	6-16	10.0	16.0	35.0	34.5	M12 x 1.5	Steel
20190200	6-16	10.0	16.0	32.0	39.4	M12 x 1.5	Stainless Steel
20190217	6-16	10.0	16.0	16.0	34.4	M12 x 1.5	Steel
20191931	6-16	10.0	16.0	35.0	34.4	M12 x 1.5	Stainless Steel
20190309	6-14	10.0	18.0	34.0	31.0	M3 x 0.5	Steel
20190316	12-20	10.0	18.0	34.0	31.0	M3 x 0.5	Steel
20190644	6-14	10.0	18.0	34.0	31.0	M3 x 0.5	Stainless Steel
20190651	12-20	10.0	18.0	34.0	31.0	M3 x 0.5	Stainless Steel
20190675	3-14	10.0	18.0	34.0	31.0	M3 x 0.5	Stainless Steel
20190682	12-20	10.0	18.0	34.0	31.0	M3 x 0.5	Stainless Steel

One-Touch Fastener - Cam Locking - Retract

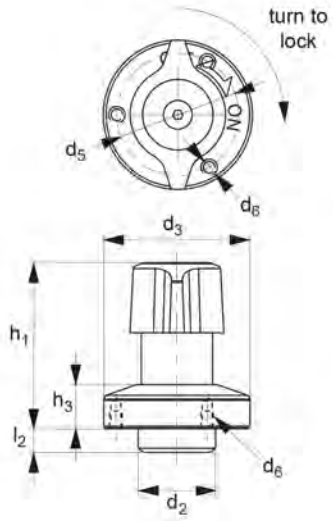

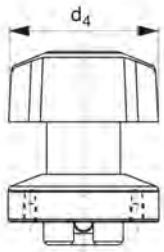

OFF position retracted

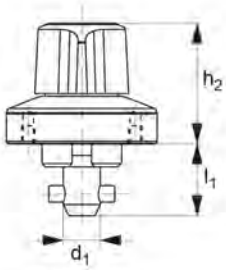

ON position extruded



Features

- It is durable and provides a secure and robust fastening solution.
- It has a one-touch cam lever that fully retracts the clamping shank when the workpiece is released.
- Resistant to temperatures of up to 130C.

Specifications

Material: Steel

One-touch fasteners with cam locking retractable are ideal for applications requiring quick and recurring changes over tooling or setups using a single touch. It is durable and provides a secure and robust fastening solution.

It has a one-touch cam lever that fully retracts the clamping shank when the workpiece is released, allowing the clamp to be engaged or disengaged safely. To do this while the lever is off, turn it to the on position. When you hear a click, it will be fully clamped. To release, turn the handle back to the off position.

These are widely used in a wide range of industrial applications, including automotive, aerospace, and medical devices. They are resistant to temperatures of up to 130C and can be utilised for applications such as drive belts or machine coverings.

One-Touch Fastener - Cam Locking - Retract

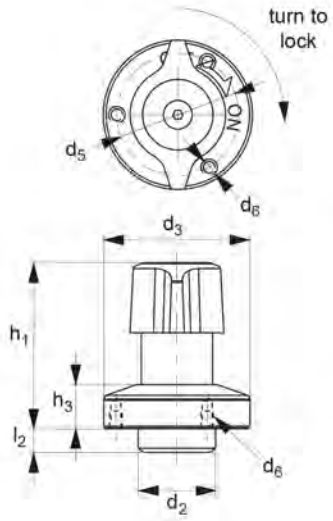

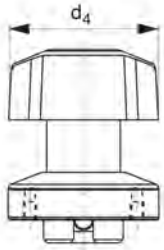

OFF position retracted

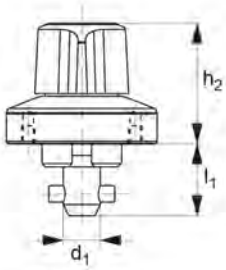

ON position extruded



Part Number	d1 -0.04|-0.08	d2	l1	l2	h1	h2	d6
20190781	5.0	14.0	15.5	5.5	30.0	20.0	M2 x 0.4
20190583	5.0	14.0	15.5	5.5	30.0	20.0	M2 x 0.4
20190798	8.0	18.0	17.0	5.5	38.0	26.5	M3 x 0.5
20190590	8.0	18.0	17.0	5.5	38.0	36.5	M3 x 0.5

One-Touch Fastener - Cam Locking

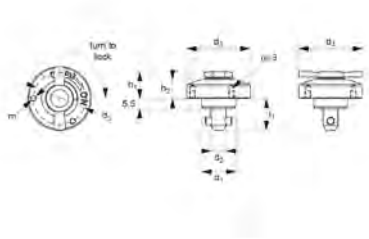

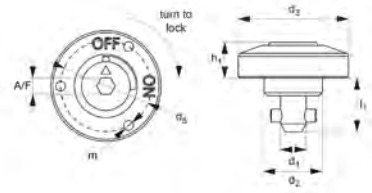





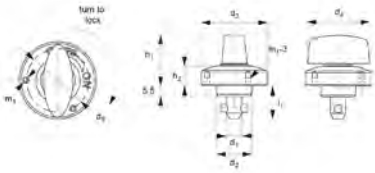

Features

- Spring holds the cam in place, and when the lever is pulled 45° off position, it pivots around a swivel point to securely engage or disengage the lock.
- Cam disengages when the fastener is pulled again, allowing the object to be easily removed.
- Resistant to temperatures of up to 130C

Specifications

Material: Stainless Steel

One-touch fasteners with cam locking are ideal for applications requiring quick and recurring changes over tooling or setups using a single touch. It is durable and provides a secure and robust fastening solution.

It consists of a body, a spring, and a cam. The spring holds the cam in place, and when the lever is pulled 45° off position, it pivots around a swivel point to securely engage or disengage the lock. The cam disengages when the fastener is pulled again, allowing the object to be easily removed.

These are widely used in a wide range of industrial applications, including automotive, aerospace, and medical devices. They are resistant to temperatures of up to 130C and can be utilised for applications such as drive belts or machine coverings.

One-Touch Fastener - Cam Locking

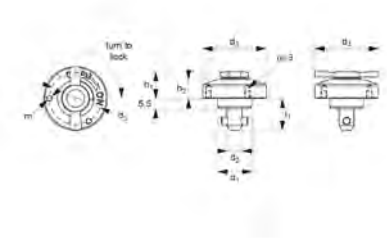

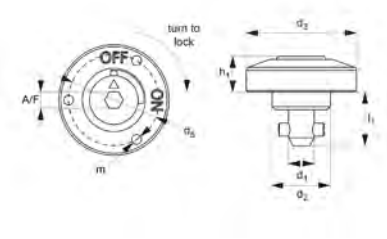



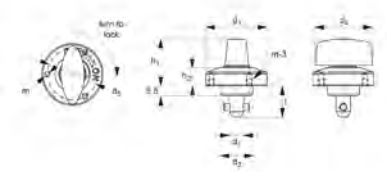

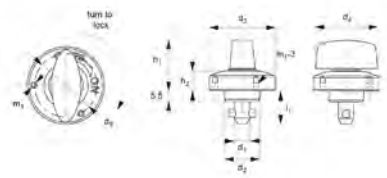

Part Number	For single panel thickness	m1	d1 -0.04|-0.08	d2 tol. H9	d3	l1
20190378	6-10	M2 x 0.4	5.0	14.0	25.0	15.5
20190408	6-10	M2 x 0.4	5.0	14.0	25.0	15.5
20190804	6-10	M2 x 0.4	5.0	14.0	25.0	15.5
20190439	6-10	M2 x 0.4	5.0	14.0	25.0	15.5
20190613	6-10	M2 x 0.4	5.0	14.0	25.0	15.5
20190385	6-14	M3 x 0.5	8.0	18.0	34.0	17.0
20190392	12-20	M3 x 0.5	8.0	18.0	34.0	23.0
20190415	6-14	M3 x 0.5	8.0	18.0	34.0	17.0
20190422	12-20	M3 x 0.5	8.0	18.0	34.0	23.0
20190811	6-14	M3 x 0.5	8.0	18.0	34.0	17.0
20190828	12-20	M3 x 0.5	8.0	18.0	34.0	23.0
20190446	6-14	M3 x 0.5	8.0	18.0	34.0	17.0
20190453	12-20	M3 x 0.5	8.0	18.0	34.0	23.0
20190835	6-14	M3 x 0.5	8.0	18.0	34.0	17.0
20190842	12-20	M3 x 0.5	8.0	18.0	34.0	23.0

One-Touch Fastener - Pull Clamping

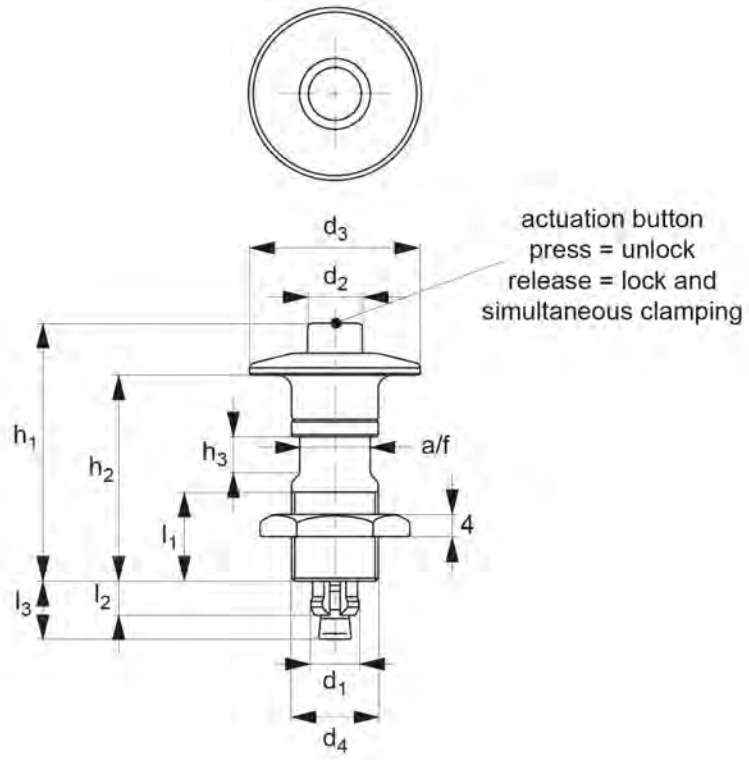



Features

- It comprises two components: a pull clamp and a metal base.
- When the two components are joined, the pull clamp mechanism connects with the item, securely keeping it in place.
- Used in a wide range of industrial applications, including automotive, aerospace, and medical devices.

Specifications

Material: Stainless Steel

One-touch fasteners with pull clamping are ideal for applications requiring quick and recurring changes over tooling or setups using a single touch. It is durable and provides a secure and robust fastening solution. It is easily removable and repositionable while keeping the connection in place.

It comprises two components: a pull clamp and a metal base. The metal base is on one side of the fastener, while the pull clamp resides on the other. When the two components are joined, the pull clamp mechanism connects with the item, securely keeping it in place. Pull the two halves apart to release the object using the pull clamp mechanism, which is easily accomplished with a single touch.

These are widely used in a wide range of industrial applications, including automotive, aerospace, and medical devices. They can be utilised for applications such as drive belts or machine coverings.

One-Touch Fastener - Pull Clamping

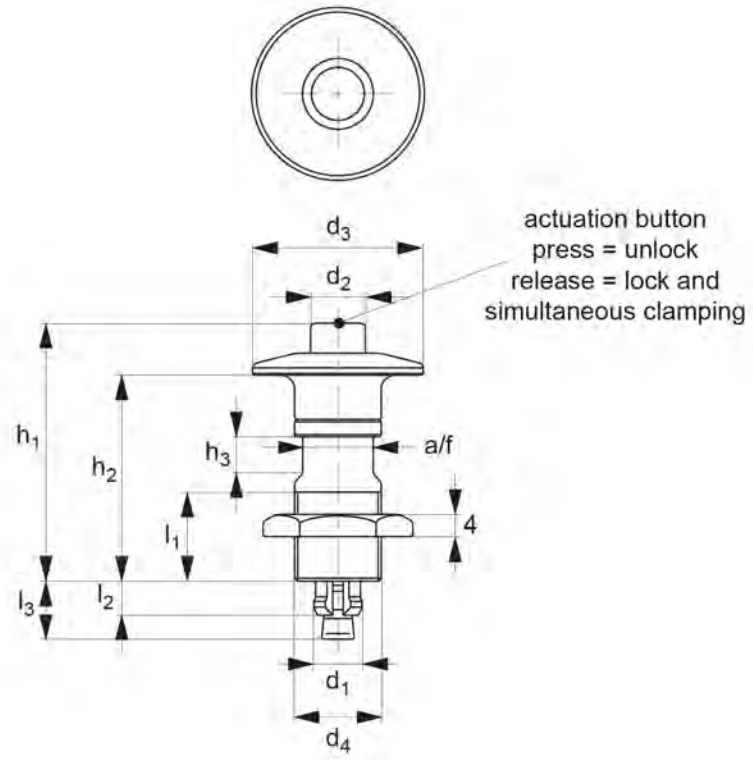



Part Number	d1	d2	d3	d4	h1	h2	h3
20190859	6.5	6.5	23.0	M12 x 1	40.0	32.0	5.5
20190873	6.5	6.5	23.0	M12 x 1	37.0	29.0	5.5
20190866	8.5	10.0	32.0	M16 x 1	51.0	41.5	7.0
20190880	8.5	10.0	32.0	M16 x 1	48.0	38.5	7.0

Locating Bushes

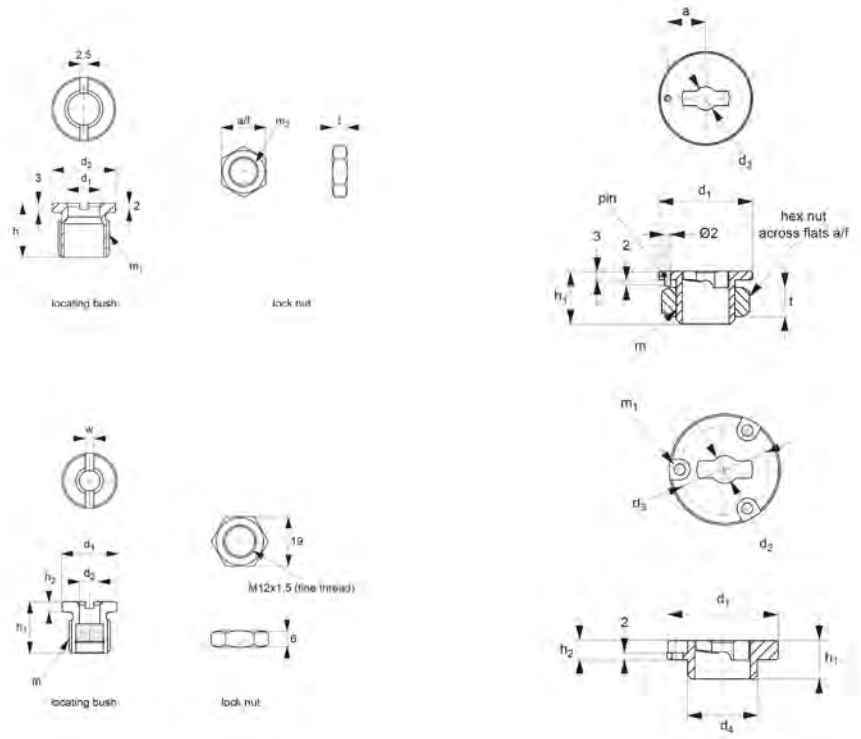



Features

- Widely used in a wide range of industrial applications, including automotive, aerospace, and medical devices.
- Resistant to temperatures of up to 180C.
- Offer a secure and precise means of finding and retaining items in place.

Specifications

Material: Stainless Steel, Steel

Locating bushings work in line with one-touch fasteners to precisely position and align components. They offer a secure and precise means of finding and retaining items in place.

It is meant to offer accurate and exact finding and holding of items in place, as well as secure panel and cover fastening. The clamping bushes, on the other hand, can serve as receivers for one-touch fasteners. One-touch fasteners may be installed without the need of bushings.

These are widely used in a wide range of industrial applications, including automotive, aerospace, and medical devices. They are resistant to temperatures of up to 180C and can be utilised for applications such as drive belts or machine coverings.

Locating Bushes

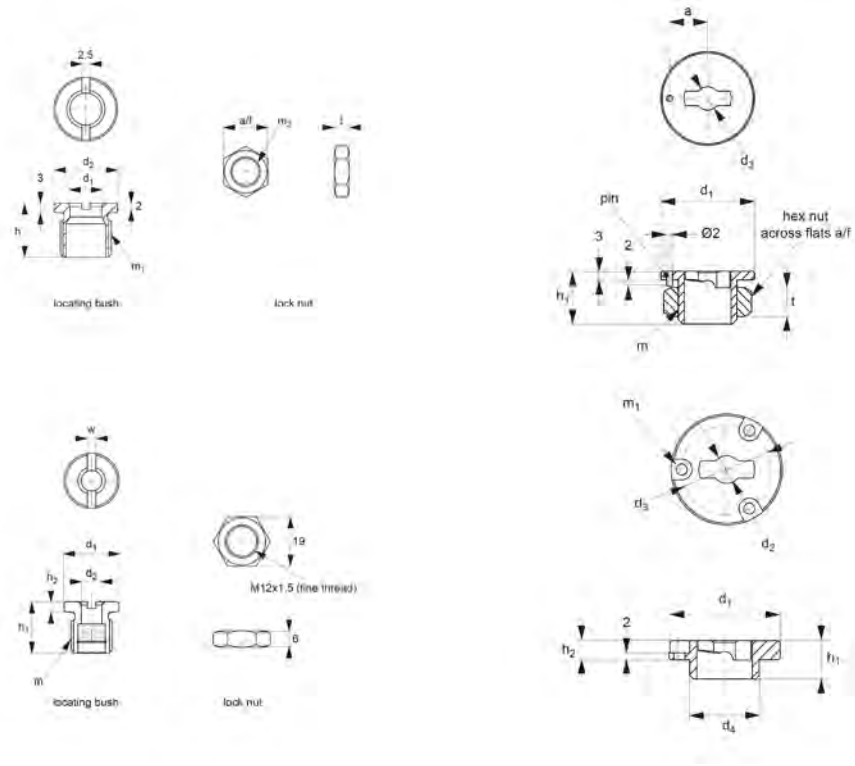



Part Number	d1	d2	m1	For panel thickness	Material
20190484	25.0	5.0	M2 x 0.4	6-12	Steel
20191948	25.0	5.0	M2 x 0.4	6-12	Stainless Steel
20190514	16.0	6.0	M12 x 1.5	2-6	Stainless Steel
20191955	32.0	8.0	M3 x 0.5	6-12	Stainless Steel
20190491	32.0	8.0	M3 x 0.5	6-12	Steel
20190460	25.0	15.0	M14 x 1.5	6-10	Steel
20191986	25.0	15.0	M14 x 1.5	6-10	Stainless Steel
20190224	6.0	16.0	M12 x 1.5	6-20	Steel
20190248	6.0	16.0	M12 x 1.5	6-20	Stainless Steel
20190231	10.0	20.0	M16 x 1.5	6-20	Steel
20190255	10.0	20.0	M16 x 1.5	6-20	Stainless Steel
20191993	32.0	21.0	M20 x 1.5	6-12	Stainless Steel
20190477	32.0	21.0	M20 x 1.5	6-12	Steel

Lock Nuts - Slip-On

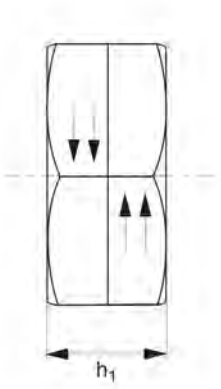

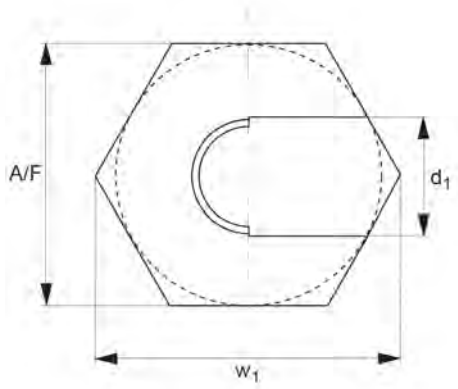



Features

- It may be slipped over broken or bent studding up to a 20-degree angle.
- It is reusable and assembles and disassembles 50% faster, saving time and effort in usage.
- It can withstand temperatures of up to +150C.

Specifications

Material: Steel

These Slip-On Lock Nuts are designed for speedy assembly and tight fixing, preventing screws or bolts from spinning, sliding, or coming free. It eliminates the need for time-consuming winding and unwinding on lengthy threads and the risk of breaking the threads.

It is zinc plated for corrosion resistance and may be slipped over broken or bent studding up to a 20-degree angle. It is suitable for use outside and is both maintenance-free and reusable. It assembles and disassembles 50% faster, saving time and effort in usage.

Simple to install in confined locations and does not require a specialised spanner. Simply open the lock nut, position it as desired, and then tighten it with a spanner. In addition, it can withstand temperatures of up to +150C. Commonly used in construction, scaffolding, automotive, and mechanical applications.

Lock Nuts - Slip-On

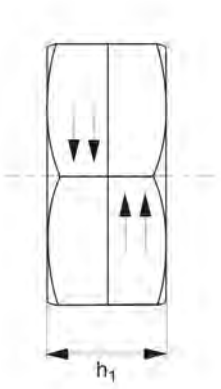

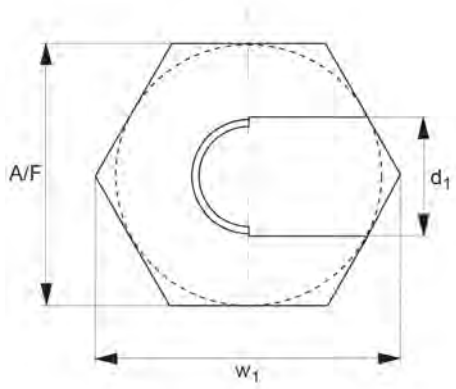



Part Number	d1	w1	h1	A/F
20252694	M6	18.2	9.5	16.0
20252700	M8	22.0	9.5	19.0
20252717	M10	25.7	12.4	22.0
20252724	M12	31.1	15.9	27.0
20252656	M14	31.1	15.9	27.0
20252731	M16	38.5	16.5	33.0
20252663	M18	38.5	16.5	33.0
20252748	M20	47.7	20.3	41.0
20252670	M22	58.6	25.4	51.0
20252687	M48	1-3/4"	50.0	108.0

Quick Tightening Knurled Knobs

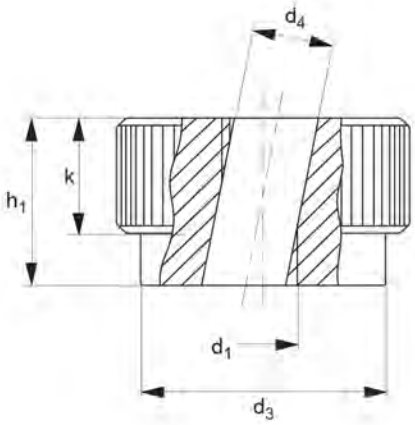

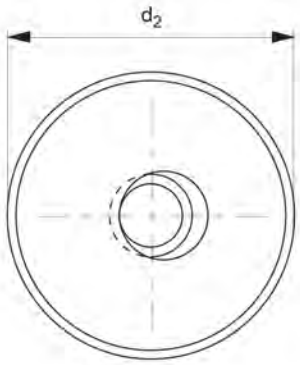



Features

- The knob is inserted obliquely on the threaded stud and then placed in the axial position to fit onto the stud threads.
- Widely utilised in a variety of industrial applications, including in automotive, aerospace, and medical equipment

Specifications

Material: Steel

Quick Tightening Knurled Knobs features a knurled surface that allows for a better grip and easier turning. It can be quickly tightened or loosened using only your fingers without requiring additional tools by only a slight clamping force. This can save time and effort in situations where changes are required regularly.

The knob is inserted obliquely on the threaded stud and then placed in the axial position to fit onto the stud threads. At this point, it can be locked with a small rotation.

These are widely utilised in a variety of industrial applications, including in automotive, aerospace, and medical equipment.

Part Number	d1	d2	d3	d4	h1	k
20179816	M6	24.0	16.0	6.7	14.0	10.0
20179823	M8	30.0	20.0	8.7	17.0	12.0
20179830	M10	36.0	28.0	11.0	20.0	14.0
20179724	M12	40.0	32.0	13.0	24.0	16.0

Thrust Screws - Brass Pad

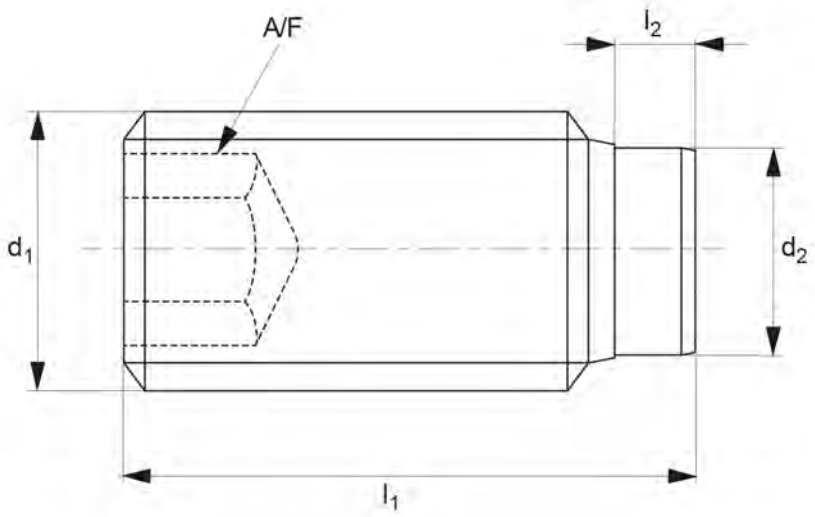



Features

- Offers a controlled bearing surface for components that must be precisely positioned and attached.
- It provides a secure and stable point of contact and is extremely wear-resistant.
- Used in mechanical assembly, precise instrumentation, calibration, and alignment.

Specifications

Material: 303 Stainless Steel

These brass pad thrust screws are designed to provide a controlled bearing surface for components that must be precisely positioned and attached while minimising axial movement or damage to the mating surface. It guarantees smooth, controlled action while reducing friction and wear.

As the screw turns, the brass pad applies pressure on the surface it touches, allowing for controlled movement or adjustment. It provides a secure and stable point of contact and is extremely wear-resistant.

It is simple to install under pressure, softly clamp or push threaded spindles, shafts, or surface-treated parts, and place more delicate parts. It is frequently utilised in mechanical assembly, precise instrumentation, calibration, and alignment.

Thrust Screws - Brass Pad

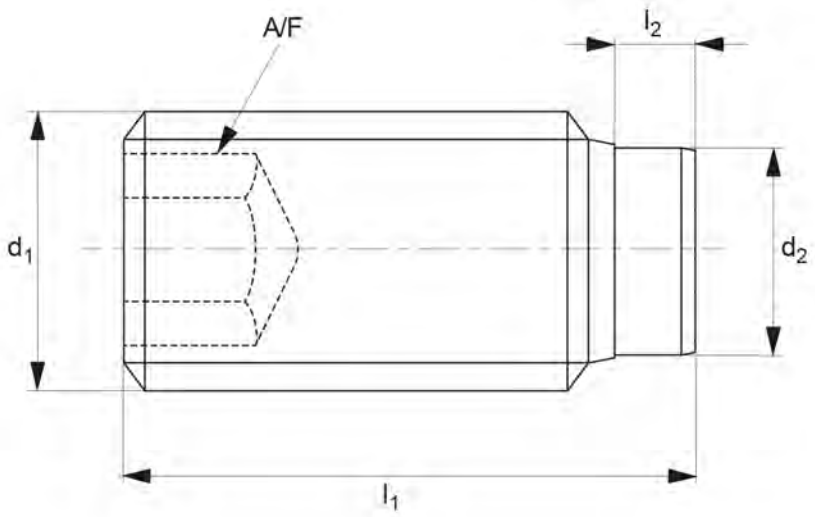



Part Number	d1	l1	l2	d2	A/F
20255503	M3	5.0	1.0	1.5	1.5
20254865	M3	7.5	1.0	1.5	1.5
20254834	M3	10.0	1.0	1.5	1.5
20254872	M4	6.5	1.2	2.5	2.0
20254889	M4	10.5	1.2	2.5	2.0
20254919	M4	16.5	1.2	2.5	2.0
20254926	M5	8.5	1.3	3.0	2.5
20254933	M5	12.5	1.3	3.0	2.5
20254940	M5	20.5	1.3	3.0	2.5
20255497	M6	11.5	1.9	4.0	3.0
20255367	M6	17.5	1.9	4.0	3.0
20254957	M6	26.5	1.9	4.0	3.0
20254964	M8	12.0	2.5	5.5	4.0
20254971	M8	22.0	2.5	5.5	4.0
20254988	M8	32.0	2.5	5.5	4.0
20254995	M10	14.0	2.7	7.0	5.0
20255008	M10	18.0	2.7	7.0	5.0
20255015	M10	27.0	2.7	7.0	5.0

Thrust Screws - Brass Pad

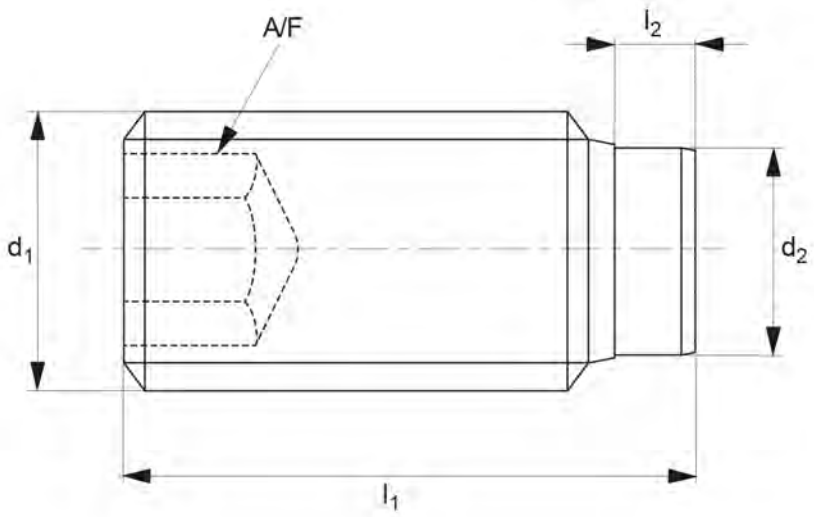



Part Number	d1	l1	l2	d2	A/F
20255022	M10	37.0	2.7	7.0	5.0
20255039	M12	18.5	3.4	8.5	6.0
20255046	M12	22.5	3.4	8.5	6.0
20254896	M12	32.5	3.4	8.5	6.0
20255053	M12	42.5	3.4	8.5	6.0

Thrust Screws - Plastic Pad

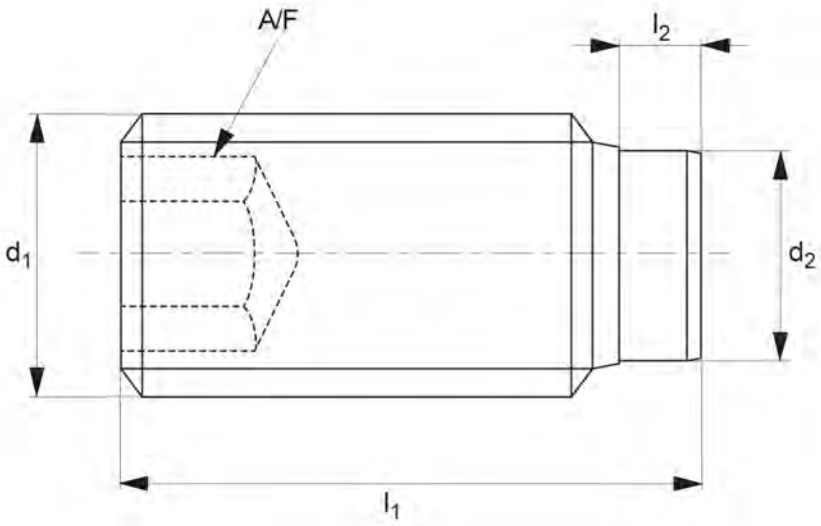



Features

- Offers a controlled bearing surface for components that must be precisely positioned and attached.
- It provides a secure and stable point of contact and is extremely wear-resistant.
- Used in mechanical assembly, precise instrumentation, calibration, and alignment.

Specifications

Material: Steel

These plastic pad thrust screws are designed to provide a controlled bearing surface for components that must be precisely positioned and attached while minimising axial movement or damage to the mating surface. It guarantees smooth, controlled action while reducing friction and wear.

As the screw turns, the plastic pad applies pressure on the surface it touches, allowing for controlled movement or adjustment. It provides a secure and stable point of contact and is extremely wear-resistant.

It is simple to install under pressure, softly clamp or push threaded spindles, shafts, or surface-treated parts, and place more delicate parts. It is frequently utilised in mechanical assembly, precise instrumentation, calibration, and alignment.

Thrust Screws - Plastic Pad

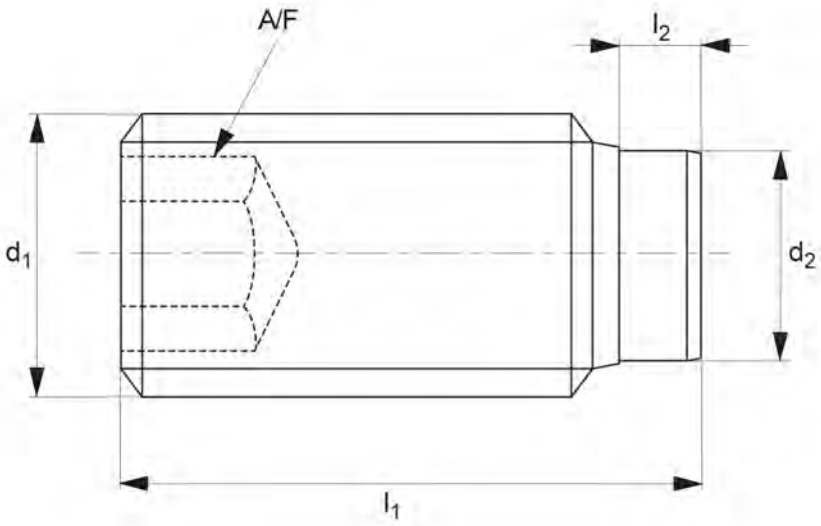



Part Number	d1	l1	l2	d2	A/F
20255381	M4	7.0	1.0	2.0	2.0
20255398	M4	9.0	1.0	2.0	2.0
20255404	M4	11.0	1.0	2.0	2.0
20255411	M4	13.0	1.0	2.0	2.0
20255428	M4	17.0	1.0	2.0	2.0
20255435	M4	21.0	1.0	2.0	2.0
20255442	M5	9.0	1.0	3.0	2.5
20255459	M5	11.0	1.0	3.0	2.5
20255466	M5	13.0	1.0	3.0	2.5
20255473	M5	17.0	1.0	3.0	2.5
20255374	M5	21.0	1.0	3.0	2.5
20255480	M5	26.0	1.0	3.0	2.5
20255060	M6	11.3	1.3	3.5	3.0
20255091	M6	13.3	1.3	3.5	3.0
20255107	M6	17.3	1.3	3.5	3.0
20255114	M6	21.3	1.3	3.5	3.0
20255121	M6	26.3	1.3	3.5	3.0
20255138	M6	33.3	1.3	3.5	3.0

Thrust Screws - Plastic Pad

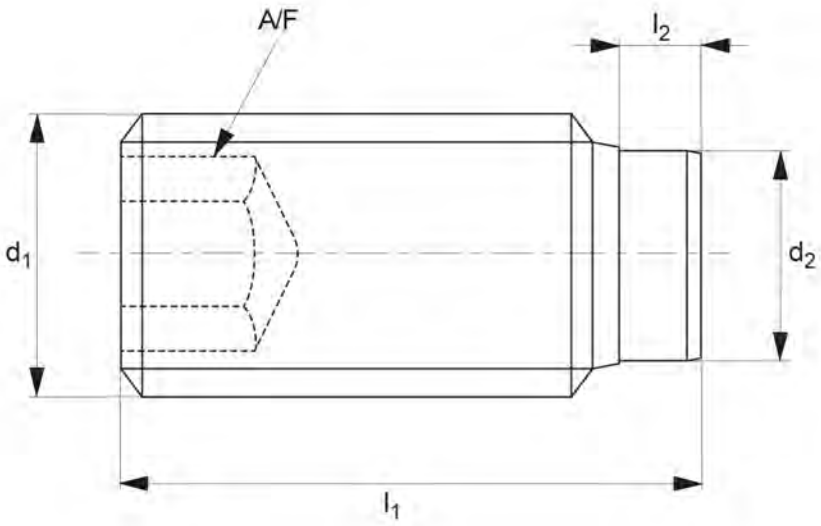



Part Number	d1	l1	l2	d2	A/F
20255145	M6	41.3	1.3	3.5	3.0
20255152	M6	51.3	1.3	3.5	3.0
20255169	M8	13.6	1.6	5.0	4.0
20255176	M8	17.6	1.6	5.0	4.0
20255084	M8	21.6	1.6	5.0	4.0
20254902	M8	26.6	1.6	5.0	4.0
20255183	M8	33.6	1.6	5.0	4.0
20255190	M8	41.6	1.6	5.0	4.0
20255206	M8	51.6	1.6	5.0	4.0
20255213	M8	64.6	1.6	5.0	4.0
20255220	M10	17.9	1.9	6.5	5.0
20255237	M10	21.9	1.9	6.5	5.0
20255244	M10	26.9	1.9	6.5	5.0
20255251	M10	33.9	1.9	6.5	5.0
20255268	M10	41.9	1.9	6.5	5.0
20255275	M10	51.9	1.9	6.5	5.0
20255282	M10	64.9	1.9	6.5	5.0
20255299	M10	81.9	1.9	6.5	5.0

Thrust Screws - Plastic Pad

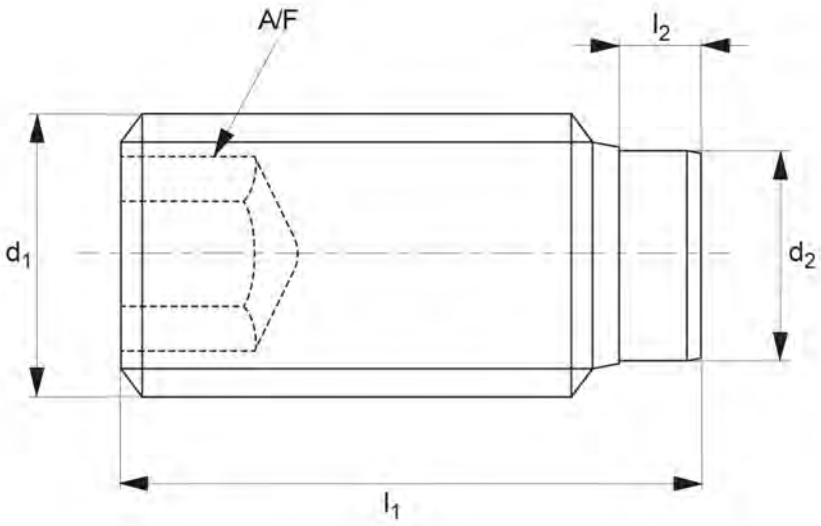



Part Number	d1	l1	l2	d2	A/F
20255077	M12	22.1	2.1	8.0	6.0
20255305	M12	27.1	2.1	8.0	6.0
20255312	M12	34.1	2.1	8.0	6.0
20255329	M12	42.1	2.1	8.0	6.0
20255336	M12	52.1	2.1	8.0	6.0
20255343	M12	65.1	2.1	8.0	6.0
20255350	M12	82.1	2.1	8.0	6.0
20255558	M12	102.1	2.1	8.0	6.0

Washers - Spherical Seat

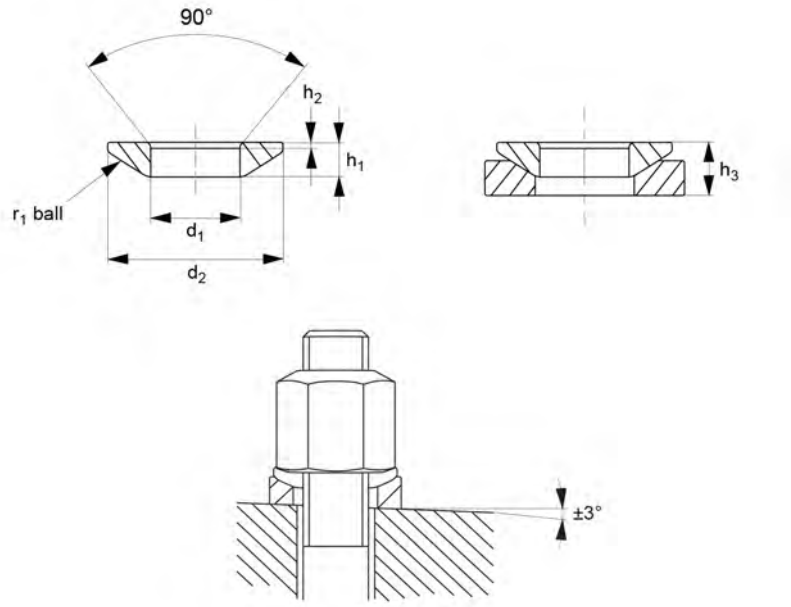

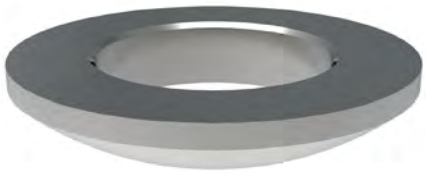

Features

- Used with nuts or bolts to compensate for misalignment between mating surfaces.
- It prevents stress concentrations, lowering the likelihood of damage or failure.
- Used in machinery, structural assemblies, and automotive applications.

Specifications

Material: Steel

These Spherical Seat Washers have a surface that is slightly convex or concave. Used with nuts or bolts to compensate for misalignment between mating surfaces, maintaining a secure connection and preventing harm to the fasteners or components they secure.

It spreads the load and ensures uniform pressure distribution between the fastener and the surface. As they respond to surface imperfections, they prevent stress concentrations, lowering the likelihood of damage or failure and ensuring overall assembly stability and dependability.

These washers' improved load-bearing capability suits them for applications involving heavy loads or dynamic stresses, offering greater strength and longevity to the assembly. As a result, they are often used in machinery, structural assemblies, and automotive applications.

Washers - Spherical Seat

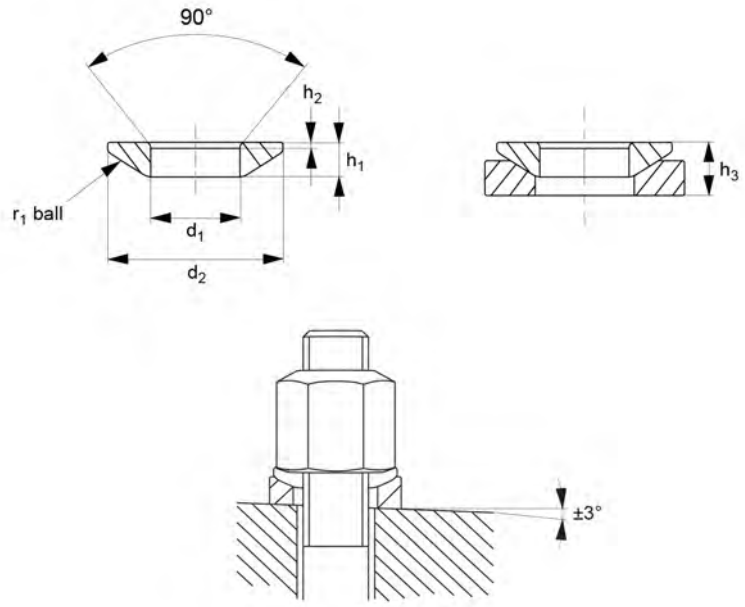

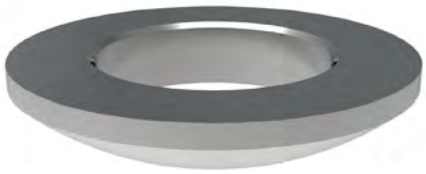

Part Number	For thread	d1 tol. H13	d2	h1	h2	r1	Load capacity for static load max. kN
20267216	M6	6.4	12.0	2.3	0.7	9.0	9.0
20267223	M8	8.4	17.0	3.2	0.6	12.0	17.0
20267230	M10	10.5	21.0	4.0	0.8	15.0	26.0
20267247	M12	13.0	24.0	4.6	1.1	17.0	38.0
20267254	M14	15.0	28.0	5.0	1.4	22.0	53.0
20267261	M16	17.0	30.0	5.3	1.3	22.0	73.0
20267278	M20	21.0	36.0	6.3	2.0	27.0	117.0
20266011	M22	23.0	40.0	7.6	2.5	29.5	146.0
20267285	M24	25.0	44.0	8.2	2.4	32.0	168.0
20265755	M27	28.0	50.0	10.2	3.3	36.0	221.0
20267292	M30	31.0	56.0	11.2	3.6	41.0	269.0
20266028	M33	34.0	62.0	13.0	4.4	45.0	326.0
20267308	M36	37.0	68.0	14.0	4.6	50.0	394.0
20266035	M39	40.0	75.0	16.0	5.6	54.0	460.0
20267315	M42	43.0	78.0	17.0	6.5	58.0	542.0
20267322	M48	50.0	92.0	21.0	8.0	67.0	714.0
20266042	M52	54.0	96.0	22.0	9.3	72.0	832.0
20267339	M56	58.0	103.0	23.0	9.8	79.0	960.0
20266059	M60	62.0	112.0	25.0	11.0	86.0	1122.0
20267346	M64	66.0	120.0	27.0	12.0	93.0	1269.0



Ready to talk?

Call **0345 528 0474** or email us at
sales@essentracomponents.co.uk